# SPECIFICATION SHEET

OLYMPIA

## ACCENT TWO HANDLE KITCHEN FAUCET

# K-5340 SHOWN **ADA**

***Model #:*** _____

***Specific Features:*** _____

***Project Name:*** _____

***Submitted For:*** _____

***Date:*** _____

- Lever Handles
- Gooseneck Style Spout
- 8-7/16” Reach, 8-1/8” From Deck to Aerator
- Washerless Cartridge Operation
- 3-Hole 8” Installation
- With 1.5 GPM Flow Rate

| Model # | Features | Finish | |
|---|---|---|---|
| K-5340* | | CP | |
| K-5340-BN* | | PVD BN | |
| K-5340-ORB* | | ORB | |

* Aerator limited to 1.5 GPM Flow Rate

**Olympia products are engineered and manufactured to meet the following standards and codes:**

ASME A112.18.1
ANSI A117.1
ANSI / NSF 61, SECTION 9
IAPMO LISTED
CONTAINS NO MORE THAN 0.25% WEIGHTED AVERAGE LEAD CONTENT

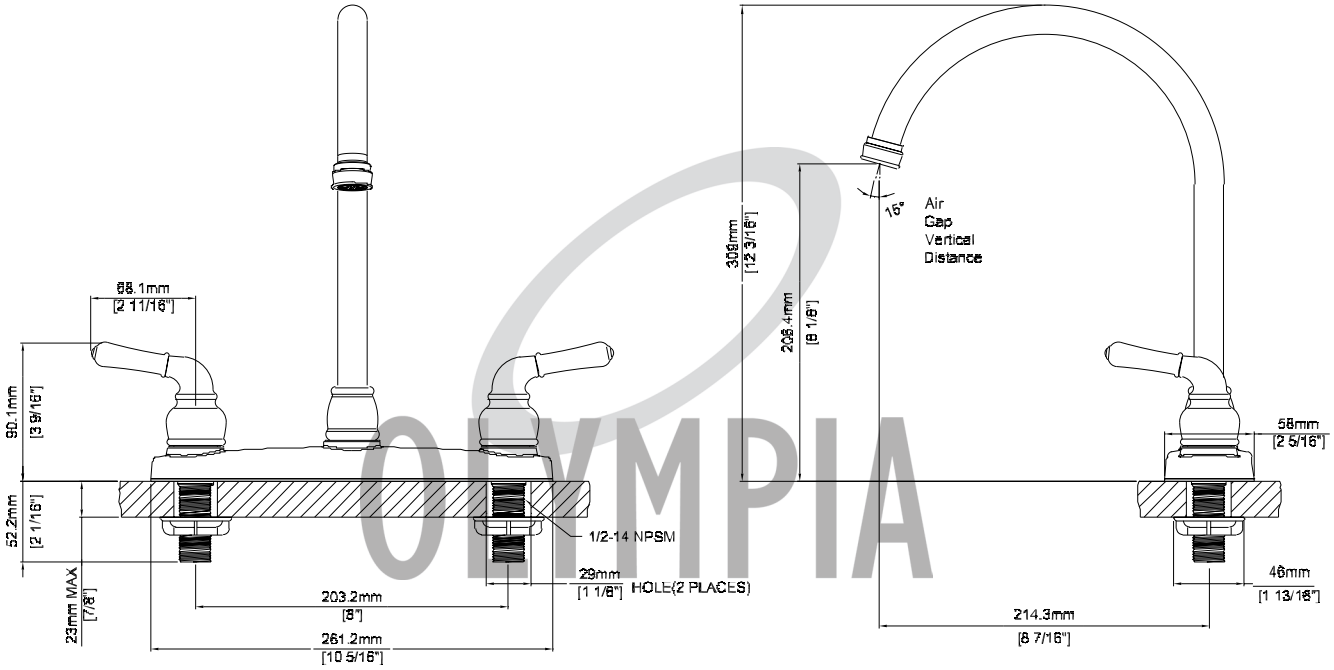



Nashville, TN
www.olympiafaucets.com


Olympia Faucets, Inc. © 2009


A Pioneer Industries Inc. Brand
DMSPK-5340/REV. 12.11