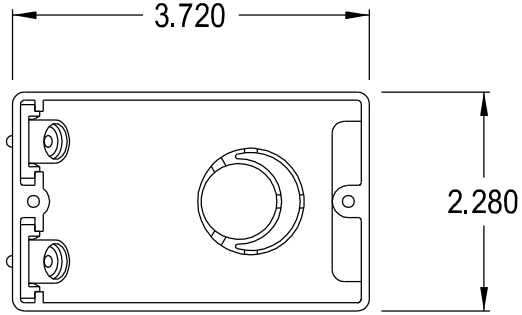
3.720
2.280

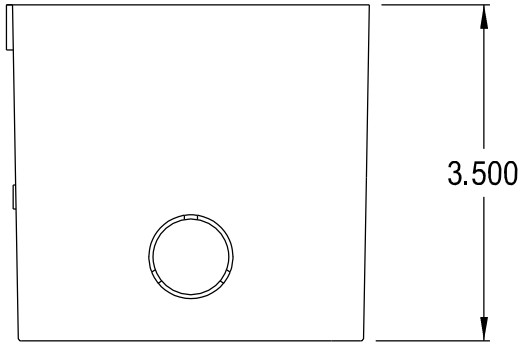
3.500

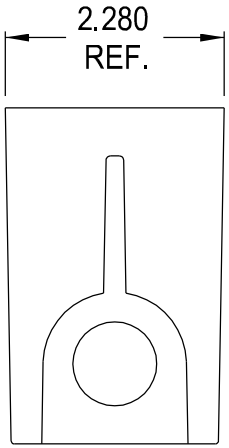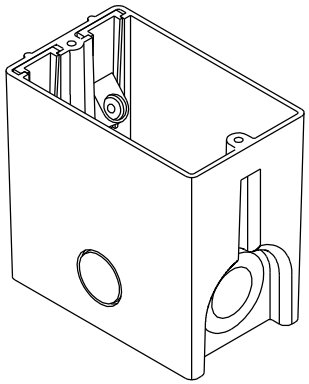
2.280
REF.