Class 14

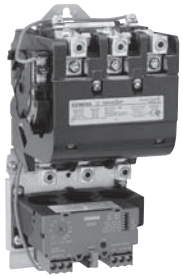

Class 17, 18

Class 82, 83, 84, 87, 88

Class LE, LC, CLM

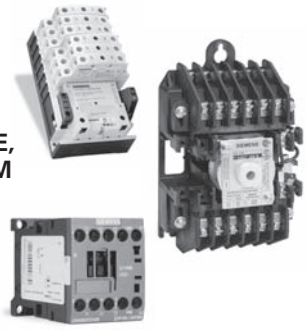

Scan to connect online to the most up-to-date version of this Section of SPEEDFAX.

NEMA & General Purpose Control

Product Overview	17-5
Manual Control	
Fractional HP Starters, Class SMF	17-6 - 17-7
Switches, Class MMS and MRS	17-8 - 17-9
Starters and Switches, Class 11 - 3RV	17-10 - 17-11
NEMA Control	
Catalog Numbering System	17-12
Non-Combination Starters Features and Benefits	17-13 - 17-14
Non-Reversing Starters, Class 14	17-15 - 17-17
Combination Starters Features and Benefits	17-18
Combination Starters, Class 17 and 18	17-19 - 17-27
Reversing Starters, Class 22	17-28 - 17-29
Combination Reversing Starters, Class 25 and 26	17-30 - 17-31
Two Speed Starters Features and Benefits	17-32
Two Speed Starters, Class 30	17-33 - 17-36
Combination Two Speed Starters, Class 32	17-37 - 17-44
Reduced Voltage Control	
Reduced Voltage Features and Benefits	17-45
Auto Transformer Starters, Class 36 and 37	17-46 - 17-49
Part Winding Starters, Class 36 and 37	17-50 - 17-53
Wye Delta Open Transition, Class 36 and 37	17-54 - 17-57
Wye Delta Closed Transition, Class 36 and 37	17-58 - 17-61
Heavy Duty Contactors	
Non-Reversing Contactors, Class 40	17-62 - 17-63
Vacuum Contactors,	17-62
Reversing Contactors, Class 43	17-64
Overload Relays, Class 48, 958 and 3RB20	17-66 - 17-69
Duplex Controllers	
Features and Benefits	17-74
Non Combination, Class 83	17-75
Combination, Class 84	17-76 - 17-77
Pump Control Panels	
Slim Line NEMA Pump Controller for Agricultural, Class 82	17-70 - 17-73
Class 87 and 88 Features and Benefits	17-78 - 17-79
Full-Voltage Type, Class 87	17-80 - 17-81
Vacuum Starter Type, Class 87	17-82
Reduced-Voltage Type, Class 88	17-83 - 17-84
Lighting Control	
Electrically Held Contactors, Class LE	17-85 - 17-90
Electrically Held Contactors, Class LC	17-91 - 17-95
Mechanically Held Contactors, Class CLM	17-96 - 17-98
Control Power Transformers	
Domestic and International (UL, CSA, CE) Class MT, MTG	17-99 - 17-103
Modifications and Drawings	
Field Modification Kits	17-104 - 17-114
Enclosure Kits	17-115 - 17-120
Factory Modifications	17-121 - 17-125
Dimensions	17-139 - 17-173
Wiring Diagrams	17-174 - 17-195
Heater Tables and Replacement Parts	
Overload Relay Heater Tables	17-126 - 17-132
NEMA Coils and Contact Kits	17-133 - 17-134
Coil VA Ratings and Overload Relays	17-135
Lighting Contactor Parts and Kits	17-136

(continued on next page)

3RW30

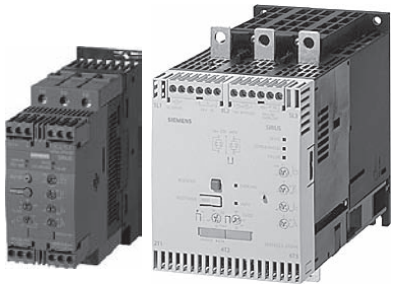
3RW40

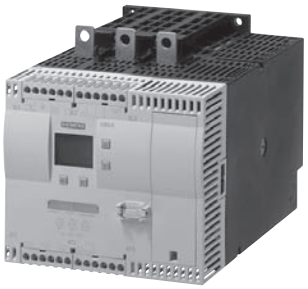
3RW44

Class 73/74

Motor Starters, Soft Starters and Load Feeders

Introduction 17-196

For Operation in the Control Cabinet 3RW Soft Starters
- General data 17-197

3RW30 for standard applications
- Overview 17-198
- Application 17-198
- Selection and ordering data 17-199
- Accessories 17-200
- Application examples 17-201
- Function 17-238
- Technical specifications 17-239 - 17-248
- Dimensional drawings 17-285
- Schematics 17-290

3RW40 for standard applications
- Overview 17-202
- Application 17-202
- Selection and ordering data 17-203 - 17-205
- Accessories 17-206 - 17-207
- Application examples 17-208
- Function 17-249
- Technical specifications 17-250 - 17-263
- Dimensional drawings 17-286
- Schematics 17-291 - 17-292

3RW44 for high-feature applications
- Configuration 17-209
- Overview 17-210
- Application 17-210
- Selection and ordering data 17-211 - 17-213
- Sirius ES engineering software 17-214 - 17-218
- Accessories 17-219 - 17-220
- Application examples 17-221 - 17-223
- Function 17-264
- Technical specifications 17-265 - 17-284
- Dimensional drawings 17-287 - 17-288
- Schematics 17-293 - 17-296

Class 73/74 Enclosed Softstarter applications
- Overview 17-224
- Application 17-224
- Selection and ordering data 17-225 - 17-236
- Factory Modifications 17-237
- Dimensional drawings 17-289
- Schematics 17-297

Class 50

Class 51

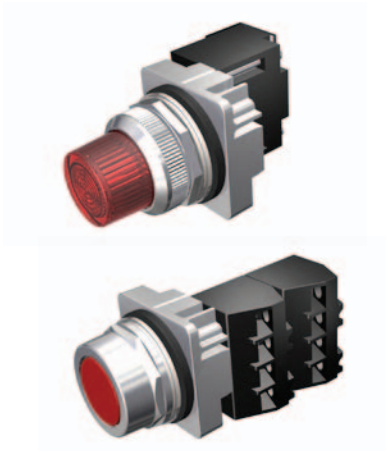
Class 52

Pilot Devices

SIRIUS ACT 3SU Series
Overview 17-298 - 17-299
For more information on the SIRIUS ACT 3SU product line, please see Section 10 of the US Industrial Controls catalog

Class 50 Standard Duty Control Stations
Introduction 17-300
Standard Duty Type 1 and 1B 17-301 - 17-305
Heavy Duty Type 4 Stations 17-306
Class 50 Accessories 17-307
Dimension Drawings 17-308

Class 51 NEMA Type 7/9 Hazardous Location Pilot Devices
Introduction 17-309
Pushbutton and Push-pull Operators 17-310
Indicator Lights 17-311
Push to Test/Illuminated Pushbutton Complete Units 17-312
Selector Switch Operators 17-313
Keyed Selector Switch Operators 17-314
Cam Selection Guide for Selector Switch 17-315
Stations and Enclosures 17-316
Accessories 17-317 - 17-319

Class 52 30.5mm Mounting Diameter Pilot Devices
Introduction 17-320
Momentary Push Button, Non-Illuminated 17-321 - 17-322
2 & 3 Position Push-Pull Mushroom Head Devices, Non-Illuminated 17-323 - 17-324
2 & 3 Position Push-Pull Mushroom Head Devices, Illuminated 17-325 - 17-326
2 Position Twist-to-Release Mushroom Head Devices, Non-Illuminated 17-327
2 Position Twist-to-Release Mushroom Head Devices, Illuminated 17-328
Indicator Light 17-329 - 17-330
Push Button & Push-to-Test, Illuminated 17-331 - 17-332
Push Button Mushroom Head Devices,Illuminated 17-333
Selector Switches, Illuminated 17-334
Selector Switch Short & Long Lever, Non-Illuminated 17-335 - 17-336
Keyed Selector Switch 17-337 - 17-338
Selector Push Button 17-339

Special Devices 17-340
Cam Selection Guide for Selector Switch, Keyed Selector Switch and Selector Pushbutton 17-341
Custom Selector Switch Designs 17-342
Accessories and Spare Parts 17-343 - 17-346
Dimensional Drawings 17-347 - 17-350

Class 52 30.5mm Enclosed Pushbutton Stations
Assembled Enclosures with Standard Devices 17-351 - 17-352
P30 Empty Enclosures Only 17-353
Enclosure Legend Plates 17-354
Enclosure Dimensions 17-355
Convenience Center 17-356
Technical Specifications 17-358

Starters at the speed you need

Siemens NEMA starters, pump panels and lighting contactors are known for their dependability and ruggedness, and now they are delivered faster than ever before through Controls Express.

Controls Express puts our most popular products in your hands faster, because we stock more products across our entire product line. Our Class 14 NEMA starters, Class 87 pump panels, and LC & LE lighting contactors are now available in stock for immediate or next day shipping. In addition, thousands of our open and enclosed starters can now be built-to-order and shipped in 1-3 days through Controls Express.

Siemens is committed to making your job easier by stocking more products, offering more configurations, expediting factory modifications, and delivering industry leading turnaround times on our most requested control products.

To quickly identify products that are part of Controls Express and therefore available in 3 days or less, applicable catalog numbers have a light blue background. See the appropriate selection pages listed below.

Class 14 NEMA Starters see pages 17-15 & 17-17

Class 17 NEMA Combination Starters see pages 17-19 to 17-24. For quick ship versions with factory modifications see on-line at www.usa.siemens.com/controls-express

Class 18 NEMA Combination Starters see pages 17-25 & 17-27.

Class 40 NEMA Contactors see page 17-62

Class 87 Pump Panels see pages 17-80 & 17-81

LE Lighting Contactors see page 17-87

LC Lighting Contactors see page 17-93 & 17-94

Controls Express lead times apply to orders of up to 6 units of the Class 14, Class 87, LC, or LE. Please contact customer service at 1-866-663-7324 for lead times of larger order volumes.

For more information on Controls Express and a complete list of available products, please visit our website at www.usa.siemens.com/controls-express

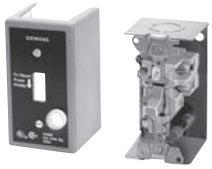

Class SMF
Fractional Horsepower
Manual Starters
Page 17-6

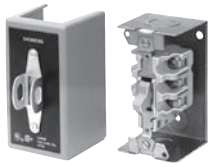

Class MMS & MRS
Fractional Horsepower
Manual Switches
Page 17-8

Class 11
Manual Starters and
Switches
Page 17-10

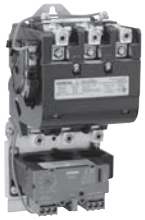

Class 14
NEMA Starters
Page 17-15

Class 17, 18
NEMA Combination
Starters
Page 17-19

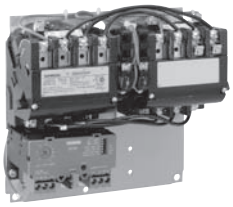

Class 22
NEMA Reversing
Starters
Page 17-28

Class 25, 26
NEMA Combination
Reversing Starters
Page 17-30

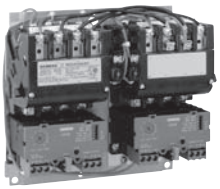

Class 30
NEMA Multi-Speed
Starters
Page 17-33

Class 32
NEMA Combination
Multi-Speed Starters
Page 17-37

Class 36, 37
Reduced Voltage
Electromechanical
Starters
Page 17-45

Class 40
NEMA Contactors
and Vacuum Contactors
Page 17-62

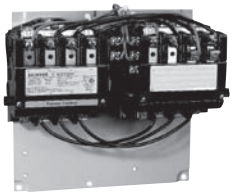

Class 43
NEMA Reversing
Contactors
Page 17-64

Class 48, 958, 3RB20
Overload Relays
Page 17-65

**Class 82, 83, 84,
87, 88**
Pump Controls
Page 17-70

Class LE, LC, CLM
Lighting Contactors
Page 17-85

Class MT, MTG
Control Power
Transformers
Page 17-99

Modifications and
Drawings
Page 17-104

Heater Tables and
Replacement Parts
Page 17-126

Class SMF

Class SMF fractional horsepower starters provide overload protection as well as manual on-off control for small horsepower motors in a variety of industrial and commercial applications. Available in one or two pole versions, these devices are suitable for use with AC single phase motors up to 1 HP. Two pole starters can also be used with DC motors up to ¾ HP. Typical applications include fans, conveyors, pumps, and small machine tools.

Continuous Current Rating

16 amperes.

Overload Trip Assembly

Motor protection is provided by a Class SMFH heater element which must be installed before the starter will operate.

Two Speed Starters

Two speed manual starters are designed for control of small single phase AC motors having separate windings for high and low speed operation. Two toggle operated starters are used, with overload protection included for each motor winding. Surface mounting devices, and those with a gray flush plate, utilize a mechanical interlock which allows direct control of the motor by means of the toggle operators.

Enclosures

Class SMF, NEMA Type 1 surface mounting enclosures are sheet steel with a thermo-plastic wrap-around cover for convenience in wiring. The NEMA Type 1 enclosure is also available in an oversized version which allows more wiring space. A zinc alloy die casting is used for NEMA Type 4 enclosures.

Pilot Lights

Red or green neon pilot light units are available for flush mounting plates, NEMA Type 1 enclosures, and NEMA Type 4 enclosures. Pilot lights may be either factory or field installed. (For starters that contain a pilot light, a Red light is standard. For a Green pilot light add "G" to the end of the catalog number.)

Terminals

Binding head screw type terminals are suitable for #10 or smaller copper wire, and are accessible from the front. All terminals are clearly marked.

Mounting

Open types without a pilot light fit standard single gang switch boxes, and can be used with any cover plate having a standard toggle cutout. Single-unit flush mounting types, including those with pilot lights, are suitable for wall mounting in a standard switch box or for machine cavity mounting without a box.

Operation

Available with toggle handle or with removable key type operator to discourage unauthorized operation.

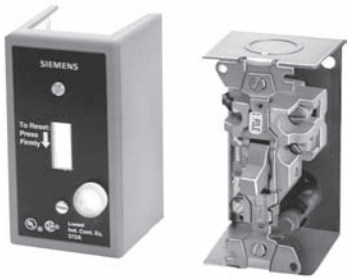

Class SMF Starter in a NEMA Type 1 Enclosure with Pilot Light

Emergency Off Actuator

A toggle operator extender is available for Class SMF, NEMA Type 1 surface mounted units. The extender has a red vinyl button that provides a fast and easy method for locating and switching the device's toggle operator into the OFF position. The Emergency Off Actuator is available in kit form only for field installation.

Handle Guard/Lock-Off

An optional handle guard on Class SMF, NEMA Type 1 enclosed starters prevents accidental operation of the toggle operator and also allows the toggle operator to be padlocked in either the "ON" or "OFF" position. This handle guard can be factory installed on NEMA Type 1 enclosed starters and is also available in kit form for field installation on NEMA Type 1 surface and flush mounting enclosures. Standard NEMA Type 4 metallic enclosures include provisions for padlocking the device in the OFF position.

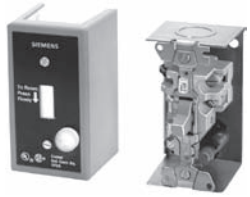

Class SMF Starter in a NEMA Type 1 Enclosure with Pilot Light

Ordering Information

- ► Heater Elements see page 17-126.
- ► Field Modification Kits see page 17-104.
- ► Dimensions see page 17-139.
- ► Wiring Diagrams see page 17-174.

Horsepower Ratings

Volts	Maximum Horsepower: AC Single Phase 1-Pole	AC Single Phase 2-Pole	DC 2-Pole
115	1	1	¾
230	1	2	¾
277	1	1	—

Starter—Class SMF, Single Phase①

Type of Operator	No. of Poles	Starter Features⑤	Open Type Catalog Number	Open Type List Price$	General Purpose Flush Mounting Open Starter with Flush Plate (No Enclosure Provided): Gray Flush Plate Catalog Number	Gray Flush Plate List Price$	Standard Stainless Steel Flush Plate Catalog Number	Standard Stainless Steel Flush Plate List Price$	Jumbo Stainless Steel Flush Plate Catalog Number	Jumbo Stainless Steel Flush Plate List Price$	NEMA Type 1 General Purpose Enclosure, Surface Mounting: Standard Catalog Number	Standard List Price$	Oversized Catalog Number	Oversized List Price$	NEMA Type 3R, 4 & 12 Watertight, Dust-tight Metallic Enclosure with Clear Cover Catalog Number	NEMA Type 3R, 4 & 12 List Price$	NEMA Type 4 Watertight, Dust-tight Metallic Enclosure Catalog Number	NEMA Type 4 List Price$	NEMA Type 3R, 7 & 9 Div 1 and Div 2 Class I Groups B, C, D & Class II Groups E, F, G Enclosures Catalog Number	NEMA Type 3R, 7 & 9 List Price$
Toggle	1	Standard	SMFF01		SMFFF1		SMFFS1		—	—	SMFFG1		SMFFGJ1		SMFFWN1		—	—	—	—
		Red Pilot Light	SMFF01P		SMFFF1P		SMFFS1P		SMFFSJ1P		SMFFG1P		SMFFGJ1P				—	—	—	—
	2	Standard	SMFF02		SMFFF2		SMFFS2		—	—	SMFFG2		SMFFGJ2		SMFFWN2		—	—	—	—
		Red Pilot Light	SMFF02P		SMFFF2P		SMFFS2P		SMFFSJ2P		SMFFG2P		SMFFGJ2P				—	—	—	—
Key	1	Standard	SMFF03		SMFFF3		SMFFS3		—	—	SMFFG3		SMFFGJ3		SMFFWN3		—	—	—	—
		Red Pilot Light	SMFF03P		SMFFF3P		SMFFS3P		SMFFSJ3P		SMFFG3P		SMFFGJ3P				—	—	—	—
	2	Standard	SMFF04		—	—	SMFFS4		—	—	SMFFG4		SMFFGJ4		SMFFWN4		—	—	—	—
		Red Pilot Light	SMFF04P		SMFFF4P		SMFFS4P		SMFFSJ4P		SMFFG4P		SMFFGJ4P				—	—	—	—

Starter With Handle Guard/Lock-Off—Class SMF, Single Phase①

Toggle	1	Standard	—	—	④	—	④	—	④	—	SMFFG5		SMFFGJ5		—	—	SMFFW1②		SMFFR1②	
		Red Pilot Light	—	—	④	—	④	—	④	—	SMFFG5P		SMFFGJ5P		—	—	SMFFW1P②		—	—
		(2) ¾" NPT Outlets	—	—	④	—	④	—	④	—	—	—	—	—	—	—	SMFFW1H		SMFFR1H	
		(2) ¾" NPT Outlets and Red Pilot Light	—	—	④	—	④	—	④	—	—	—	—	—	—	—	SMFFW1PH		—	—
	2	Standard	—	—	④	—	④	—	④	—	SMFFG6		SMFFGJ6		—	—	SMFFW2②		SMFFR2②	
		Red Pilot Light	—	—	④	—	④	—	④	—	SMFFG6P		SMFFGJ6P		—	—	SMFFW2P②		—	—
		(2) ¾" NPT Outlets	—	—	④	—	④	—	④	—	—	—	—	—	—	—	SMFFW2H		SMFFR2H	
		(2) ¾" NPT Outlets and Red Pilot Light	—	—	④	—	④	—	④	—	—	—	—	—	—	—	SMFFW2PH		—	—

One Starter in Duplex Enclosure—Class SMF, Single Phase①

Type of Operator	Number of Poles	Starter Features⑤	General Purpose Flush Mounting Open Starter with Flush Plate - (No Enclosure Provided): Gray Flush Plate For Wall or Cavity Mounting Catalog Number	Gray Flush Plate List Price $	Stainless Steel Flush Plate for Wall or Cavity Mounting Catalog Number	Stainless Steel Flush Plate List Price $	NEMA Type 1 General Purpose Enclosure Surface Mounting Catalog Number	NEMA Type 1 List Price $	Replacement Starters Catalog Number	Replacement Starters List Price $
Toggle	2	Standard	—	—	—	—	SMFFG02		—	—
		Red Pilot Light	—	—	—	—	SMFFG02P		—	—
Key	2	Red Pilot Light	—	—	—	—	SMFFG04P		—	—

Two Starters In Duplex Enclosure—Class SMF, Single Phase③

Toggle	2 Per Starter	Standard	SMFFF222		—	—	SMFFG222		—	—
		Red Pilot Light on Each Starter	SMFFF222P		—	—	SMFFG222P		—	—
Key	2 Per Starter	Red Pilot Light on Each Starter	SMFFF44P		SMFFS44P		SMFFG44P		—	—

Starter And "Auto-Off-Hand" SPDT Selector Switch (AC Only)—Class SMF, Single Phase①

Toggle	1	Standard	SMFFF71		—	—	SMFFG71		—	—
		Red Pilot Light	SMFFF71P		SMFFS71P		SMFFG71P		—	—
	2	Standard	—	—	—	—	SMFFG72		—	—
		Red Pilot Light	SMFFF72P		SMFFS72P		SMFFG72P		—	—
Key	2	Red Pilot Light	SMFFF74P		SMFFS74P		SMFFG74P		—	—

Two Speed Starters (AC Only)—Class SMF, Single Phase③

Toggle	1	Mechanical Interlock	SMFFF11		—	—	SMFFG11		SMFF01T	
		Mechanical Interlock and (2) Red Pilot Lights	SMFFF11P		—	—	SMFFG11P		SMFF01PT	
		Mechanical Interlock, HIGH-OFF-LOW Selector Switch and (2) Red Pilot Lights	—	—	—	—	—	—	SMFF01PT	
	2	Mechanical Interlock	SMFFF22		—	—	SMFFG22		—	—
		Mechanical Interlock and (2) Red Pilot Lights	SMFFF22P		—	—	SMFFG22P		SMFF02PT	
		Mechanical Interlock, HIGH-OFF-LOW Selector Switch and (2) Red Pilot Lights	—	—	SMFFS202P		—	—	SMFF02PT	

① One heater element required.
② Furnished with (1) ¾" NPT Outlet in bottom (reversible for top feed).
③ Two heater elements required.
④ Order Open Type starter plus separate handle guard kit.
⑤ For starters that contain a pilot light, a Red light is standard. For a Green pilot light add "G" to the end of the catalog number.

Class MMS, MRS

Class MMS and MRS motor starting switches provide manual "ON-OFF" control of single or three phase AC motors where overload protection is not required or is provided separately. Compact construction and a 600 volt rating make these switches suitable for a wide range of industrial and commercial uses. Typical applications include small machine tools, pumps, fans, conveyors and many other types of electrical machinery. They can also be used on non-motor loads such as resistance heating applications.

Continuous Current Rating

MMS & MRS: 30 amperes at 250 volts max, 26.4 amperes at 277 volts, 20 amperes at 600 volts max, 30 amperes resistive at 600 volts max.

Two Speed—Class MRS

Two speed manual switches may be used with separate winding three phase or single phase AC motors where overload protection is not required or is provided separately. Two switches are employed to give "ON-OFF" control in each speed.

Reversing—Class MRS

Reversing manual switches provide a compact means of starting, stopping and reversing AC motors where overload protection is not required or is provided separately. They are suitable for use with three phase squirrel cage motors and for single phase motors which can be reversed by reconnecting motor leads. Two switches are used, one to connect the motor forward rotation and one for reverse.

Enclosures

Class MMS, MRS, NEMA Type 1 surface mounting enclosures are sheet steel with a thermo-plastic wrap-around cover for convenience in wiring. The NEMA Type 1 enclosure is also available in an oversized version which allows more wiring space. A zinc alloy die casting is used for NEMA Type 4 enclosures.

Pilot Lights

Red or green neon pilot light units are available for flush mounting plates, NEMA Type 1 enclosures, and NEMA Type 4 enclosures. Pilot lights may be either factory or field installed. (For switches that contain a pilot light, a Red light is standard. For a Green pilot light add "G" to the end of the catalog number.)

Terminals

Binding head screw type terminals are suitable for #10 or smaller copper wire, and are accessible from the front. All terminals are clearly marked.

Mounting

Open types without a pilot light fit standard single gang switch boxes, and can be used with any cover plate having a standard toggle cutout. Single-unit flush mounting types, including those with pilot lights, are suitable for wall mounting in a standard switch box or for machine cavity mounting without a box.

Operation

Available with toggle handle or with removable key type operator to discourage unauthorized operation.

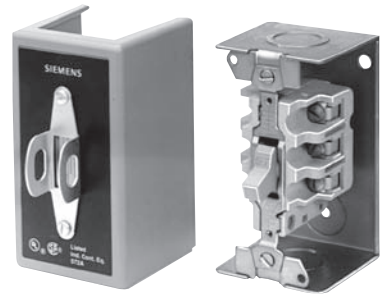

Class MMS Switch in a NEMA Type 1 Enclosure

Emergency Off Actuator

A toggle operator extender is available for Class MMS, MRS, NEMA Type 1 surface mounted units. The extender has a red vinyl button that provides a fast and easy method for locating and switching the device's toggle operator into the OFF position. The Emergency Off Actuator is available in kit form only for field installation.

Handle Guard/Lock-Off

An optional handle guard on Class MMS, MRS, NEMA Type 1 enclosed switches prevents accidental operation of the toggle operator and also allows the toggle operator to be padlocked in either the "ON" or "OFF" position. This handle guard is available in kit form for field installation on NEMA Type 1 surface and flush mounting enclosures. Standard NEMA Type 4 metallic enclosures include provisions for padlocking the device in the OFF position.

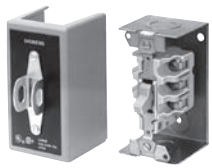

Class MMS Switch in a NEMA Type 1 Enclosure

Ordering Information

- Heater Elements not Required.
- Field Modification Kits see page 17-104.
- Dimensions see page 17-139.
- Wiring Diagrams see page 17-174.

Horsepower Ratings

Device	No of Poles	Motor Type AC	Maximum HP 115V	Maximum HP 230V	Maximum HP 450–575V	DC Ratings 90V	DC Ratings 115V	DC Ratings 230V
Class MMS	2	Single Phase	2	2	3	1	2	1½
	3	3-Phase	2	7½	10	1	2	1½
Class MRS Reversing	2	Single Phase	2	2	3	1	2	1½
	3	3-Phase	2	7½	10	1	2	1½
Class MMS Two Speed	2	Single Phase	2	2	3	1	2	1½
	3	3-Phase, Constant or Variable Torque	2	7½	10	1	2	1½
	3	3-Phase, Constant Horsepower	2	7½	10	1	2	1½

Switch—Class MMS, Single Phase and 3-Phase

Type of Operator	No of Poles	Switch Features④	Open Type Catalog Number	Open Type List Price$	General Purpose Flush Mounting Open Switch with Flush Plate (No Enclosure Provided) — Gray Flush Plate Catalog Number	Gray Flush Plate List Price$	Standard Stainless Steel Flush Plate Catalog Number	Standard Stainless Steel Flush Plate List Price$	Jumbo Stainless Steel Flush Plate Catalog Number	Jumbo Stainless Steel Flush Plate List Price$	NEMA Type 1 General Purpose Enclosure Surface Mounting — Standard Catalog Number	Standard List Price$	Oversized Catalog Number	Oversized List Price$	NEMA Type 3R, 4 & 12 Watertight, Dust-tight Metallic Enclosurer with Clear Cover Catalog Number	List Price$	NEMA Type 4② Watertight, Dust-tight Metallic Enclosure Catalog Number	List Price$	NEMA Type 7 & 9② Class I Groups B, C & D & Class II Groups E, F, G Enclosures Catalog Number	List Price$
Toggle	2	Standard	MMSK01		MMSKF1		MMSKS1		—		MMSKG1		—		MMSKWN1		MMSKW1		MMSKR1	
		Red Pilot Light 115V AC	MMSK01A③		MMSKF1A		MMSKS1A		—		MMSKG1A		MMSKGJ1A				MMSKW1A		—	
		Red Pilot Light 230V AC	MMSK01B③		MMSKF1B		MMSKS1B		MMSKSJ1B		MMSKG1B		—				MMSKW1B		—	
	3	Standard	MMSK02		MMSKF2		MMSKS2		—		MMSKG2		MMSKGJ2		MMSKWN2		MMSKW2		MMSKR2	
		Red Pilot Light 208-240V AC	MMSK02B③		MMSKF2B		MMSKS2B		—		MMSKG2B		MMSKGJ2B				MMSKW2B		—	
		Red Pilot Light 440-600V AC	MMSK02C③		—		MMSKS2C		MMSKSJ2C		MMSKG2C		MMSKGJ2C				MMSKW2C		—	
Key	2	Standard	MMSK03		MMSKF3		MMSKS3		—		MMSKG3		MMSKGJ3		MMSKWN3		—		—	
		Red Pilot Light 115V AC	—		MMSKF3A		MMSKS3A		MMSKSJ3A		MMSKG3A		MMSKGJ3A				—		—	
		Red Pilot Light 230V AC	MMSK03B		MMSKF3B		MMSKS3B		MMSKSJ3B		MMSKG3B		MMSKGJ3B				—		—	
	3	Standard	MMSK04		MMSKF4		MMSKS4		—		MMSKG4		MMSKGJ4		MMSKWN4		—		—	
		Red Pilot Light 208–240V AC	MMSK04B		MMSKF4B		MMSKS4B		MMSKSJ4B		MMSKG4B		MMSKGJ4B				—		—	
		Red Pilot Light 440–600V AC	MMSK04C		MMSKF4C		MMSKS4C		MMSKSJ4C		MMSKG4C		MMSKGJ4C				—		—	

Reversing Switch—Class MRS, Single Phase and 3-Phase

Type of Operator	Number of Poles	Suitable Motor Types	Switch Features④ (Including Mechanical Interlock)	General Purpose Flush Mounting Open Switch with Flush Plate (No Enclosure Provided) Catalog Number	List Price $	NEMA Type 1 General Purpose Enclosure Surface Mounting Catalog Number	List Price $	Replacement Switch Class MRS Catalog Number	List Price $
Toggle	2	Single Phase 3-Lead Repulsion-Induction	Standard	MRSKF11		—		MRSK01T	
			Red Pilot Device—115V AC	MRSKF11A		—		MRSK01AT	
			Red Pilot Device— 230V AC	MRSKF11B		MRSKG11B		MRSK01BT	
	3	3-Phase; Also Single Phase Capacitor, Split Phase, or 4-Lead Repulsion-Induction	Standard	MRSKF22		MRSKG22		—	
			Red Pilot Light—110–120V AC	MRSKF22A		MRSKG22A		MRSK02AT	
			Red Pilot Light—208–220V AC	MRSKF22B		—		MRSK02BT	
			Red Pilot Light—440–600V AC	MRSKF22C		MRSKG22C		MRSK02CT	

Two Speed Switch—Class MMS, Single Phase and 3-Phase

Type of Operator	Number of Poles	Suitable Motor Types	Switch Features④ (Including Mechanical Interlock)	General Purpose Flush Mounting Open Switch with Flush Plate (No Enclosure Provided) Catalog Number	List Price $	NEMA Type 1 General Purpose Enclosure Surface Mounting Catalog Number	List Price $	Replacement Switch Class MRS Catalog Number	List Price $
Toggle	2	Single Phase Two Winding (3-Lead)	Standard	MMSKF11		MMSKG11		MRSK01T	
			(2) Red Pilot Devices—115V AC	MMSKF11A		MMSKG11A		MRSK01AT	
			(2) Red Pilot Devices—230V AC	MMSKF11B		MMSKG11B		MRSK01BT	
	3	3-Phase Separate Winding (Wye-Connected)	Standard	MMSKF22		MMSKG22		MRSK02T	
			(2) Red Pilot Lights—208–240V AC	MMSKF22B		MMSKG22B		MRSK02BT	
			(2) Red Pilot Lights—440–600V AC	MMSKF22C		MMSKG22C		MRSK02CT	

① Manual switches do not include overloads.
② Furnished with (1) 3/4" NPT outlet in bottom (reversible for top feed). In order to obtain a ¾" NPT outlet in top and bottom, add suffix letter "H" to type number with List Price adder.
③ Do not use as replacement interiors for NEMA Type 4 metallic enclosures. For replacement unit, order Type MMSK01 or MMSK02 and separate pilot light kit.
④ For switches that contain a pilot light, a Red light is standard. For a Green pilot light add "G" to the end of the catalog number.

Now Available with the New 3RV2 Innovations MSP

Class 11 - 3RV

Class 11 across the line manual starters and switches provide control for machinery where remote start stop control is not required.

Class 11 - 3RV manual starters are used for single and poly-phase motors up to 20HP @ 575V. Starters have bimetallic heater elements to provide class 10 overcurrent protection. Each starter has a fourth bimetallic strip that reacts only to the ambient temperature inside the control panel. This ambient compensation helps prevent the starter from nuisance tripping when the panel temperature is higher than the ambient temperature of the motor.

A built-in differential trip bar causes the starter to trip faster on a phase loss condition to help reduce motor damage.

Magnetic trip elements in each starter take the device off line when it senses current of 13 times the maximum FLA dial setting.

Class 11 - 3RV switches provide control for inherently protected motors. Typical applications include metal and woodworking machinery, grinders, power saws, conveyors, fans, pumps, blowers, textile and packaging machinery, and paper cutters.

Each switch is provided with magnetic trip elements which take the device off line when it senses current of 13 times the maximum switch rating.

Class 11 - 3RV manual starters can be used as Type E self-protected manual combination starters (up to 22 amps) per UL508 or as components in Group Installation per NEC 430.53. When using the Class 11 - 3RV as a manual combination starter upstream protection is not required.

Class 11 - 3RV controllers are available with low voltage protection which will automatically open the power poles when the voltage drops or the power is interrupted.

Controllers with the LVP option provide the OSHA requirements for protecting personnel from potential injury caused by the automatic start-up of machinery following a voltage drop or power interruption when low voltage protection is specified.

Class 11 - 3RV is available as Open style, or in NEMA 1, NEMA 7 & 9 or NEMA 7 & 9 / 3 & 4 enclosures.

Standard Features include:

- ON/OFF rotary handle with lockout and visible trip indication
- Adjustment dial for setting to motor FLA (Starters only)
- Low Voltage Protection (LVP) Option
- Short Circuit trip at 13 times the maximum setting of the FLA dial or rated current
- Ambient compensated up to 140°F
- Phase loss sensitivity
- Test trip function
- LVP Option Meets OSHA Requirements
- UL Listed
- CSA Certified

OPEN TYPE
Starter

NEMA 1
General Purpose

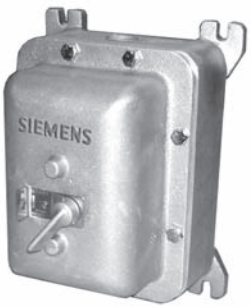

NEMA 7 & 9
Div 1 & Div 2
Class I Group C & D
Class II Group E, F & G

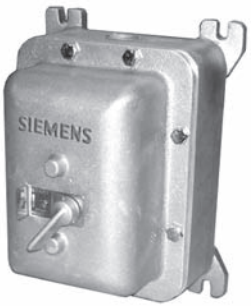

NEMA 3 & 4, NEMA 7 & 9
Div 1 & Div 2
Class I Group C & D
Class II Group E, F & G

Class 11 Manual Motor Starter

Ordering Information

- No heaters required.
- Field Modification Kits see page 17-104.
- Dimensions see page 17-141.
- Wiring Diagrams see page 17-174.
- For applications requiring a low voltage protection coil see table at right.

Low Voltage Protection Coil Table

60 Hz Voltage	Letter
120V	*F
208V	*D
240V	*G
460V	*H

*Add corresponding letter to end of base Class 11 catalog number for low voltage protection coil with List Price adder.

Note: The LVP option for Open type 3RV is available from the factory, please order separately from the field modification kits on page 17-105.

The coil voltage should correspond with the line voltage.

Manual Starter—Class 11 - 3RV

FLA Adjustment Range①	Max HP						Enclosure							
	Single Phase HP Ratings		3-Phase HP Ratings				Open Type		NEMA 1 General Purpose		NEMA 7 & 9 Class I Groups C & D Class II Groups E, F & G		NEMA 3 & 4, NEMA 7 & 9 Watertight Class I Groups C & D Class II Groups E, F & G	
	115V	230V	200V	230V	460V	575V	Catalog No.	List Price $	Catalog No.	List Price $	Catalog No.	List Price $	Catalog No.	List Price $
0.11-0.16	—	—	—	—	—	—	3RV2011-0AA10②		11AD3B		11AD3H		11AD3W	
0.14-0.2	—	—	—	—	—	—	3RV2011-0BA10②		11BD3B		11BD3H		11BD3W	
0.18-0.25	—	—	—	—	—	—	3RV2011-0CA10②		11CD3B		11CD3H		11CD3W	
0.22-0.32	—	—	—	—	—	—	3RV2011-0DA10②		11DD3B		11DD3H		11DD3W	
0.28-0.4	—	—	—	—	—	—	3RV2011-0EA10②		11ED3B		11ED3H		11ED3W	
0.35-0.5	—	—	—	—	—	—	3RV2011-0FA10②		11FD3B		11FD3H		11FD3W	
0.45-0.63	—	—	—	—	—	—	3RV2021-0GA10②		11GD3B		11GD3H		11GD3W	
0.55-0.8	—	—	—	—	—	½	3RV2021-0HA10②		11HD3B		11HD3H		11HD3W	
0.7-1	—	—	—	—	½	½	3RV2021-0JA10②		11JD3B		11JD3H		11JD3W	
0.9-1.25	—	—	—	—	¾	¾	3RV2021-0KA10②		11KD3B		11KD3H		11KD3W	
1.1-1.6	—	1/10	—	—	¾	1	3RV2021-1AA10②		11LD3B		11LD3H		11LD3W	
1.4-2	—	⅛	—	—	1	1 ½	3RV2021-1BA10②		11MD3B		11MD3H		11MD3W	
1.8-2.5	—	⅙	½	½	1 ½	1 ½	3RV2021-1CA10②		11ND3B		11ND3H		11ND3W	
2.2-3.2	1/10	¼	¾	¾	1 ½	2	3RV2021-1DA10②		11PD3B		11PD3H		11PD3W	
2.8-4	⅛	⅓	¾	1	2	3	3RV2021-1EA10②		11QD3B		11QD3H		11QD3W	
3.5-5	⅙	½	1	1	3	3	3RV2021-1FA10②		11RD3B		11RD3H		11RD3W	
4.5-6.3	¼	¾	1 ½	1 ½	5	5	3RV2021-1GA10②		11SD3B		11SD3H		11SD3W	
5.5-8	⅓	1	2	2	5	5	3RV2021-1HA10②		11TD3B		11TD3H		11TD3W	
7-10	½	1 ½	3	3	7 ½	10	3RV2021-1JA10②		11UD3B		11UD3H		11UD3W	
9-12.5	½	2	3	3	7 ½	10	3RV2021-1KA10②		11VD3B		11VD3H		11VD3W	
11-16	1	3	5	5	10	15③	3RV2021-4AA10②		11WD3B		11WD3H		11WD3W	
14-20	1 ½	3	5	7 ½	15	20③	3RV2021-4BA10②		11XD3B		11XD3H		11XD3W	
17-22	2	3	7 ½	7 ½	15	20③	3RV2021-4CA10②		11YD3B		11YD3H		11YD3W	
20-25	2③	5③	7 ½③	7 ½③	15③	20③	3RV2021-4DA10②		11ZD3B		11ZD3H		11ZD3W	

Manual Switch—Class 11 - 3RV

Rated Current①	Max HP						Enclosure							
	Single Phase HP Ratings		3-Phase HP Ratings				Open Type		NEMA 1 General Purpose		NEMA 7 & 9 Class I Groups C & D Class II Groups E, F & G		NEMA 3 & 4, NEMA 7 & 9 Watertight Class I Groups C & D Class II Groups E, F & G	
	115V	230V	200V	230V	460V	575V	Catalog No.	List Price $	Catalog No.	List Price $	Catalog No.	List Price $	Catalog No.	List Price $
1	—	—	—	—	½③	½③	3RV2321-0JC10②		111D3B		111D3H		111D3W	
5	⅙③	½③	1③	1③	3③	3③	3RV2321-1FC10②		112D3B		112D3H		112D3W	
10	½③	1 ½③	3③	3③	7 ½③	10③	3RV2321-1JC10②		113D3B		113D3H		113D3W	
20	1 ½③	3③	5③	7 ½③	15③	20③	3RV2321-4BC10②		114D3B		114D3H		114D3W	
25	2③	5③	7 ½③	7 ½③	15③	20③	3RV2321-4DC10②		115D3B		115D3H		115D3W	

① Instantaneous Magnetic Trip will occur at 13 times the maximum FLA dial setting or rated switch current.
② Product Category: IEC
③ Shaded Ratings apply for Manual Motor Controllers Only! These Ratings do not apply as UL Listed Manual Combination Starters.
④ Add 1 to the end of the catalog number for 1/2 inch drain hole with plug and list price adder. Drain fitting not supplied, order separately XDB-2.

Class

- **17** — Combination Starter (Non Fusible, Fusible)
- **18** — Combination Starter (Circuit Breaker)
- **25** — Reversing Combination Starter (Non Fusible, Fusible)
- **26** — Reversing Combination Starter (Circuit Breaker)

Size

- **B** — 00
- **C** — 0
- **D** — 1
- **E** — 1¾
- **F** — 2
- **G** — 2½
- **H** — 3
- **I** — 3½
- **J** — 4
- **L** — 5
- **M** — 6
- **N** — 7
- **P** — 8

Model

- **U** — Solid-state OLR size 0–4 & size 7 & 8
- **P** — Thermal size 0–3½, Solid state size 5 & 6

Solid-state OLR Current Range⑤

Three Phase

- **A** — 0.25–1
- **B** — 0.75–3.4
- **C** — 3–12
- **D** — 5.5–22
- **E** — 10–40
- **F** — 13–52
- **G** — 25–100
- **H** — 50–200
- **J** — 100–300 w/ CT's
- **K** — 133–400 w/ CT's
- **L** — 200–600 w/ CT's
- **M** — 250–750 w/ CT's
- **N** — 400–1200 w/ CT's

Breaker HP Code②
Horsepower Rating
200, 230, 460, 575

- **A** — ½, ½,1, 1
- **B** — 1, 1, 3, 3
- **C** — 3, 3, 5, 5
- **D** — 3, 3, 7½, 7½
- **E** — 7½, 7½, 10, 10
- **F** — —, —, 15, 15
- **G** — 10, 10, —, —
- **H** — 7½, 10, 20, 20
- **J⑥** — 10, 15, 25, 25
- **K** — —, —, 30, 30
- **L** — 15, 20, —, —
- **M** — —, —, 30, 30
- **N** — 25, 30, 50, 50
- **P** — 30, 40, 75, 75
- **R** — 40, 50, 100, 100

Enclosure Size

- **92** — Standard Width
- **82** — Extra Wide

Enclosure Type

- **B** — NEMA 1
- **F** — NEMA 4X Fiberglass
- **H** — NEMA 7/9/3/4, Bolted (Class 18 & 26 only)
- **N** — NEMA 12 (Field convertible to 3/3R/4)
- **W** — NEMA 4/4X 304 Stainless Steel

Class

- **14** — Across the Line NEMA Motor Starter
- **22** — Reversing NEMA Motor Starter
- **40** — Across the Line NEMA Magnetic Contactor
- **43** — Reversing NEMA Magnetic Contactor

Size

- **B** — 00
- **C** — 0
- **D** — 1
- **E** — 1¾
- **F** — 2
- **G** — 2½
- **H** — 3
- **I** — 3½
- **J** — 4
- **L** — 5
- **M** — 6
- **N** — 7
- **P** — 8

Model

- **U** — Solid-state OLR size 00–4, Size 7 & 8
- **P** — Thermal size 00–4, Solid state sizes 5 & 6

Solid-state OLR Current Range⑤

Three Phase

- **A** — 0.25–1
- **B** — 0.75–3.4
- **C** — 3–12
- **D** — 5.5–22
- **E** — 10–40
- **F** — 13–52
- **G** — 25–100
- **H** — 50–200
- **J** — 100–300 w/ CT's
- **K** — 133–400 w/ CT's
- **L** — 200–600 w/ CT's
- **M** — 250–750 w/ CT's
- **N** — 400–1200 w/ CT's

Single Phase①

- **A** — 0.25–1
- **B** — 0.75–3.4
- **C** — 3–12
- **D** — 5.5–22

Pilot Control Circuit

- **2** — suitable for 3-wire control (NO aux. contact incl.)

Enclosure Size

- **1** — 2 power poles,1-phase
- **3** — 3 power poles, 3-phase
- **8** — 3 power poles, 3-phase, extra wide enclosure

Coil

- **A③** — 110–120V/220–240V@60Hz 110V/190–220V@50Hz
- **C③** — 220–240V/440–480V@60Hz 190–220V/380–440V@50Hz
- **D** — 200–208V@60Hz
- **E** — 550–600V@60Hz 550V@50Hz
- **F** — 120V@60Hz 110V@50Hz
- **G** — 220–240V@60Hz 190–220V@50Hz
- **H** — 440–480V@60Hz 380–440V@50Hz
- **J⑥** — 24V@60Hz 24V@50Hz
- **L** — 277V@60Hz 240V@50Hz

Enclosure Type

- **A** — Open
- **B** — NEMA 1
- **F** — NEMA 4X Fiberglass
- **H** — NEMA 7/9/3/4, Bolted (Class 18 & 26 only)
- **0** — NEMA 12 (Field convertible to 3/3R/4)
- **W** — NEMA 4/4X 304 Stainless Steel

Class

- **36** — Non Combination Reduced Voltage Starter
- **37** — Combination Reduced Voltage Starter

Size

- **C** — 0
- **D** — 1
- **E** — 1¾
- **F** — 2
- **G** — 2½
- **H** — 3
- **I** — 3½
- **J** — 4
- **L** — 5
- **M** — 6
- **N** — 7
- **P** — 8

Model

- **U** — Solid-state OLR size 0–4 & size 7 & 8
- **P** — Thermal size 0–3½ Solid state size 5 & 6

Solid-state OLR Current Range⑤

Type

- **T** — Auto XFMR
- **P** — Part Wind.
- **0** — Wye Delta Open Trans.
- **C** — Wye Delta Closed Trans.

Line Volts

- **2** — 230
- **3** — 380
- **4** — 460
- **5** — 575
- **6** — 200/208

Enclosure Type

- **A** — Open
- **B** — NEMA 1
- **W** — NEMA 4/4X Stainless Steel
- **0** — NEMA 12

Coil

- **D**
- **E**
- **F**
- **G**
- **H**
- **L**

Disconnect Type④

- **D** — Non Fused Disc.
- **F** — Fusible Disc.
- **P** — MCP

① Single phase solid-state OLR available on Class 14 Starters only.

② Not used on Class 17, 25 or with solid-state OLR versions.
③ Not available on sizes 5–8.
④ For Class 37 only.

⑤ Position used for solid-state OLR only.
⑥ Not available on sizes 7 and 8.

Solid State Starter Class 14

Standard Features

Size 00–4 magnetic starters include the following standard features:

- Rugged Industrial Design
- Half Sizes for Cost and Space Savings
- Dual Voltage, Dual Frequency Coils
- Solid State or Ambient Compensated Bimetal Overload Protection
- Wide Range of Accessories
- Easy Coil Access
- Overload Test Feature
- Straight Thru Wiring
- Gravity Dropout
- Large Silver Cadmium Contacts
- UL listed file #E14900 (class 14, 22, 30, 40 & 43)
- CSA certified file #LR 6535 (class 14, 22, 30, 40 & 43)

Application

Heavy Duty starters are designed for across the line starting of single phase and polyphase motors.

These controls are available in NEMA Sizes 00 through 8. In addition to the usual NEMA Starter Sizes, Siemens offers three exclusive Half Sizes; 1¾, 2½ and 3½. These integral sizes offer the same rugged, industrial construction as our NEMA Sizes and ensure efficient operating performance. Half Sizes provide a real cost savings by cutting down on over capacity when NEMA Sizes exceed the motor ratings. All Siemens Heavy Duty controls, including our popular Half Sizes comply with applicable NEMA and UL tests.

All starters are supplied with a NO holding interlock that in conjunction with an appropriate pilot device will provide low voltage protection or release.

NEMA starters are ideal for applications requiring dependability and durability. Typical applications include use with machine tools, air conditioning equipment, material handling equipment, compressors, hoists and various production and industrial equipment as well as in demanding automotive applications.

Starters are available as an open type or in NEMA 1, 12/3/3R, 4 (painted), 4/4X (stainless), 4X (fiberglass), and 7 & 9 enclosures.

Gravity Dropout

For added reliability, the gravity dropout of the armature and contacts is assisted by stainless steel springs which help provide quick, precise opening of the contacts.

45 Degree, Wedge Action Contacts

The 45 degree, wedge action contacts reduce tracking and provide faster arc quenching. The resulting self-cleaning and reduced contact bounce mean cooler operation and longer life for the large silver cadmium oxide contacts.

Terminal Design

Control terminals are self-rising pressure type.

Molded Coil

Magnetic coils are carefully wound and then sealed in epoxy. Encapsulation helps seal out moisture, promotes heat transfer and resists electrical, mechanical and thermal stresses.

Dual Voltage/Frequency Coil

Starters are available with dual voltage, dual frequency coils. They are designed to operate on either 50 or 60 Hertz.

Molded Stationary Contact Block

Thermoset materials resist arc tracking and the stresses of heat and severe impact.

Field Modification Kits

All starters can be modified in the field with a complete range of accessories. These include pushbuttons, selector switches, pilot lights, auxiliary contacts and surge suppressors.

Auxiliary Equipment

- NEMA starters are available with built-in START-STOP push buttons for 3-wire control or a HAND-OFF-AUTO selector switch for 2-wire control
- Field modifications such as auxiliary contacts, pilot lights, push buttons, selector switches, and fuse blocks are available to meet particular application requirements
- Normally opened or normally closed auxiliary power pole kits are available for Sizes 00 through 1¾
- Transformers can be ordered as either factory or field modifications. In some cases these may require a larger enclosure
- A full line of replacement parts are available including contact kits, coils, and overload relays

Size 5 & 6 Starters Additional Features

- Solid State Overload (3RB type) Standard
- Latest technology in arc quenching to extend contactor life
- Wide variety of enclosures in all starter configurations

Size 7 & 8 Starters Additional Features

- New Compact Design
- Can be mounted in any position
- Same coil voltage is AC or DC

ESP200™ Solid State Starter

ESP200™ starters combine the rugged NEMA contactors with a state of the art solid state overload that provides phase loss, phase unbalance ground fault protection. It offers the user greater motor protection and extended life in heavy duty applications. The ESP200™ ultimately results in a cost savings to the user.

ESP200™ Solid State Overload Relays

Standard features provide Improved Starter Performance:

- True phase loss protection; trips within 3 seconds
- Phase unbalanced prevents motor running inefficiently
- Ground fault trip when selected
- Selectable trip class 5, 10, 20 or 30
- Reset trip can be selected Auto/ Manual restart
- Easy to select and use, Dip Switch selectable
- Overload is self powered, no need for external power source

Half Size Starters

Half-Size starters feature all the rugged performance characteristics of our NEMA rated starter sizes, but are fractionally sized to more closely match your exact motor rating. As a result, significant economic savings are made possible without sacrificing the reliability you expect from a heavy duty starter.

These additional starter sizes have the reserve capacity to handle occasional plugging and jogging applications without derating. Superior operating performance in heavy duty applications is assured by the large current carrying parts, not by derating the device.

Exclusive "half-sizes" save potentially hundreds, even thousands of dollars per project.

Using the table below, simply match the specific size starter to the horsepower rating of your motor. Every half-size starter saves you money—up to 31%.

All "half-sizes" comply to applicable NEMA and UL standards.

ESP200® FLA Adjustment Dial—Set the adjustment dial on the overload to the FLA of the motor.

Figure 1

Typical Solid-State Overload Adjustment Dial Markings

Each overload is precisely calibrated and labels are laser printed.

DIP Switch Settings

Adjust DIP switch settings to the Trip Class desired 5, 10, 20, or 30.

- Set Phase Unbalance ON or OFF
- Set Phase Loss ON or OFF
- Set Reset to Manual or Automatic
- Set Ground Fault ON or OFF

Savings for Siemens "Half-Size" Starters in NEMA 1 Enclosures, FVNR

Motor Size 230V	Motor Size 460V	Starter Size	Half Size	List Price $	"Half-Size" Savings Over Next Full Size
7½	10	1	—		—
10	15	—	1¾		31%
15	25	2	—		—
20	30	—	2½		20%
30	50	3	—		—
40	75	—	3½		13%
50	100	4	—		—

Standard Auxiliary Contacts			
Type	Size (3rd Character)	Configuration	Internal / External
All FVNR Starters & Contactors	B Thru E	1N.O.	Internal
	F Thru J	1N.O.	External
	L Thru M	2N.O., 2N.C.	External
	N Thru P	1N.O., 1N.C.	External

Ordering Information

- Replace the (*) with a letter from the coil table. Dual voltage coils are wired on high voltage unless specified on order.
- Field Modification Kits see page 17-106.
- Factory Modifications see page 17-121.
- Dimensions see pages 17-142 open and 17-159 enclosed.
- Wiring Diagrams see page 17-175.
- Replacement Parts see page 17-133.

Coil Table

60Hz Voltage	Letter
24	J
120	F
110–120/220–240①	A
200–208	D
220–240	G
277	L
220–240/440–480①	C
440–480	H
575–600	E

For other voltages and frequencies, see Factory Modifications page 17-121.

Open Type & Standard Width Enclosure, 3-Phase, 3-Pole

Max Hp						Overload		Enclosure											
								Open Type Standard Auxiliary Contacts⑦		**NEMA 1** General Purpose		**NEMA 4/4X Stainless**② Watertight, Dust-tight, Corrosion Resistant @ = W for 304 Stainless Steel @ = X for 316 Stainless Steel		**NEMA 4X Fiberglass** Watertight, Dust-tight Corrosion Resistant		**NEMA 7 & 9 NEMA 3 & 4** Div. 1 and Div. 2 Class I Groups C & D Class II Groups E, F & G Class III Bolted Enclosures Indoor/Outdoor Use		**NEMA 12 NEMA 3/3R**② Industrial Use Weatherproof (Field Convertible to 3/3R)	
200 Volts	**230 Volts**	**460 Volts**	**575 Volts**	**NEMA Size**	**Half Size**	**Amp Range**	**Frame Size**	**Catalog Number**	**List Price $**	**Catalog Number**	**List Price $**	**Catalog Number**	**List Price $**	**Catalog Number**	**List Price $**	**Catalog Number**	**List Price $**	**Catalog Number**	**List Price $**
⅛	⅛	½	½	00	—	0.25–1	A	**14BUA32A***		**14BUA32B***		**Use Size 0**	—	**Use Size 0**	—	**Use Size 0**	—	**Use Size 0**	—
½	¾	1½	2	00	—	0.75–3.4	A	**14BUB32A***		**14BUB32B***		**Use Size 0**	—	**Use Size 0**	—	**Use Size 0**	—	**Use Size 0**	—
1½	1½	2	—	00	—	3–12	A1	**14BUC32A***		**14BUC32B***		**Use Size 0**	—	**Use Size 0**	—	**Use Size 0**	—	**Use Size 0**	—
⅛	⅛	½	½	0	—	0.25–1	A	**14CUA32A***		**14CUA32B***		**14CUA32@***		**14CUA32F***		**14CUA32H***		**14CUA320***	
½	¾	1½	2	0	—	0.75–3.4	A	**14CUB32A***		**14CUB32B***		**14CUB32@***		**14CUB32F***		**14CUB32H***		**14CUB320***	
2	2	5	5	0	—	3–12	A1	**14CUC32A***		**14CUC32B***		**14CUC32@***		**14CUC32F***		**14CUC32H***		**14CUC320***	
3	3	—	—	0	—	5.5–22	A1	**14CUD32A***		**14CUD32B***		**14CUD32@***		**14CUD32F***		**14CUD32H***		**14CUD320***	
⅛	⅛	½	½	1	—	0.25–1	A	**14DUA32A***		**14DUA32B***		**14DUA32@***		**14DUA32F***		**14DUA32H***		**14DUA320***	
½	¾	1½	2	1	—	0.75–3.4	A	**14DUB32A***		**14DUB32B***		**14DUB32@***		**14DUB32F***		**14DUB32H***		**14DUB320***	
2	2	5	5	1	—	3–12	A1	**14DUC32A***		**14DUC32B***		**14DUC32@***		**14DUC32F***		**14DUC32H***		**14DUC320***	
3	3	10	10	1	—	5.5–22	A1	**14DUD32A***		**14DUD32B***		**14DUD32@***		**14DUD32F***		**14DUD32H***		**14DUD320***	
7½	7½	—	—	1	—	10–40	A1	**14DUE32A***		**14DUE32B***		**14DUE32@***		**14DUE32F***		**14DUE32H***		**14DUE320***	
10	10	15	15	—	1¾	10–40	A1	**14EUE32A***		**14EUE32B***		**14EUE32@***		**14EUE32F***		**14EUE32H***		**14EUE320***	
10	15	25	25	2	—	13–52	B	**14FUF32A***		**14FUF32B***		**14FUF32@***		**14FUF32F***		**14FUF32H***		**14FUF320***	
15	20	30	30	—	2½	25–100	B	**14GUG32A***		**14GUG32B***		**14GUG32@***		**14GUG32F***		**14GUG32H***		**14GUG320***	
25	30	50	50	3	—	25–100	B	**14HUG32A***		**14HUG32B***		**14HUG32@***		**14HUG32F***		**14HUG32H***		**14HUG320***	
30	40	75	75	—	3½	50–200	B	**14IUH32A***		**14IUH32B***		**14IUH32@***		**14IUH32F***		**14IUH32H***		**14IUH320***	
40	50	100	100	4	—	50–200	B	**14JUH32A***		**14JUH32B***		**14JUH32@***		**14JUH32F***		**14JUH32H***		**14JUH320***	
75	100	200	200	5	—	55–250	—	**14LPU32A***		**14LPU32B***		**14LPU32E***④		—	—	**14LPU32H***		**14LPU320***	
150	200	400	400	6	—	160–630	—	**14MPX32A***		**14MPX32B***		**14MPX32E***④		—	—	—	—	**14MPX320***	
—	300	600	600	7*⑤	—	400–1220	A1+CT	**14NUN32A***		**14NUN32B***		**14NUN32E***④		—	—	—	—	**14NUN320***	
—	450	900	900	8⑥	—	400–1220	A1+CT	**14PUN32A***		**14PUN32B***		**14PUN32E***④		—	—	—	—	**14PUN320***	

Open Type & Standard Width Enclosure, Single Phase, 2-Pole③

Max Hp			Overload		Enclosure											
					Open Type Standard Auxiliary Contacts		**NEMA 1** General Purpose		**NEMA 4/4X Stainless**② Watertight, Dust-tight, Corrosion Resistant @ = W for 304 Stainless Steel @ = X for 316 Stainless Steel		**NEMA 4X Fiberglass** Watertight, Dust-tight Corrosion Resistant		**NEMA 7 & 9 NEMA 3 & 4** Div. 1 and Div. 2 Class I Groups C & D Class II Groups E, F & G Class III Bolted Enclosures Indoor/Outdoor Use		**NEMA 12 NEMA 3/3R**② Industrial Use Weatherproof (Field Convertible to 3/3R)	
115 Volts	**208/230 Volts**	**NEMA Size**	**Amp Range**	**Frame Size**	**Catalog Number**	**List Price $**	**Catalog Number**	**List Price $**	**Catalog Number**	**List Price $**	**Catalog Number**	**List Price $**	**Catalog Number**	**List Price $**	**Catalog Number**	**List Price $**
⅛	¼	0	0.75–3.4	A	**14CUB12A***		**14CUB12B***		**14CUB12@***		**14CUB12F***		**14CUB12H***		**14CUB120***	
¼	½	0	3–12	A1	**14CUC12A***		**14CUC12B***		**14CUC12@***		**14CUC12F***		**14CUC12H***		**14CUC120***	
1	2	0	5.5–22	A1	**14CUD12A***		**14CUD12B***		**14CUD12@***		**14CUD12F***		**14CUD12H***		**14CUD120***	
⅛	¼	1	0.75–3.4	A	**14DUB12A***		**14DUB12B***		**14DUB12@***		**14DUB12F***		**14DUB12H***		**14DUB120***	
¼	½	1	3–12	A1	**14DUC12A***		**14DUC12B***		**14DUC12@***		**14DUC12F***		**14DUC12H***		**14DUC120***	
1	2	1	5.5–22	A1	**14DUD12A***		**14DUD12B***		**14DUD12@***		**14DUD12F***		**14DUD12H***		**14DUD120***	
3	7½	2	25-100	B	**14FUG12A***		**14FUG12B***		**14FUG12@***		**14FUG12F***		**14FUG12H***		**14FUG120***	
7½	15	3	25-100	B	**14HUG12A***		**14HUG12B***		**14HUG12@***		**14HUG12F***		**14HUG12H***		**14HUG120***	

Note: All starter sizes carry one maximum Hp rating (per the National Electric Code).

① Dual voltage coils not available in size 5–8 starters.
② For conduit hubs and conversion instructions, see page 17-112.
③ Coils D, F, or G will be wired for incoming voltage. J coil will be wired for separate source. Coils E, H, and L do not apply to single phase starters.
④ Enclosure is NEMA Type 4 (painted steel).
⑤ F coil 100-250V AC 50/60Hz, or DC, H coil 150-500V AC 50/60Hz, or DC
⑥ Only available F coil100-250V AC 50/60Hz, or DC

NEMA 1

Ordering Information

- Replace the (*) with a letter from the coil table. Dual voltage coils are wired on high voltage unless specified on order.
- Field Modification Kits see page 17-106.
- Factory Modifications see page 17-121.
- Dimensions see page 17-159.
- Wiring Diagrams see page 17-175.
- Replacement Parts see page 17-133.

Coil Table

60Hz Voltage	Letter
24	J
120	F
110–120/220–240	A
200–208	D
220–240	G
277	L
220–240/440–480	C
440–480	H
575–600	E

For other voltages and frequencies, see Factory Modifications page 17-121.

Extra Wide Enclosure, 3-Phase, 3-Pole

Max Hp						Overload		Enclosure							
								NEMA 1 General Purpose		**NEMA 4/4X Stainless**① Watertight, Dust-tight, Corrosion Resistant @ = W for 304 Stainless Steel @ = X for 316 Stainless Steel		**NEMA 7 & 9** **NEMA 3 & 4** Div. 1 and Div. 2 Class I Groups C & D Class II Groups E, F & G Class III Bolted Enclosures Indoor/Outdoor Use		**NEMA 12** **NEMA 3/3R**① Industrial Use Weatherproof (Field Convertible to 3/3R)	
200 Volts	**230 Volts**	**460 Volts**	**575 Volts**	**NEMA Size**	**Half Size**	**Amp Range**	**Frame Size**	**Catalog Number**	**List Price $**	**Catalog Number**	**List Price $**	**Catalog Number**	**List Price $**	**Catalog Number**	**List Price $**
⅛	⅛	½	½	00	—	0.25–1	A	**14BUA82B***		**Use Size 0**	—	**Use Size 0**	—	**Use Size 0**	—
½	¾	1½	2	00	—	0.75–3.4	A	**14BUB82B***		**Use Size 0**	—	**Use Size 0**	—	**Use Size 0**	—
1½	1½	2	—	00	—	3–12	A1	**14BUC82B***		**Use Size 0**	—	**Use Size 0**	—	**Use Size 0**	—
⅛	⅛	½	½	0	—	0.25–1	A	**14CUA82B***		**14CUA82@***		**14CUA82H***		**14CUA820***	
½	¾	1½	2	0	—	0.75–3.4	A	**14CUB82B***		**14CUB82@***		**14CUB82H***		**14CUB820***	
2	2	5	5	0	—	3–12	A1	**14CUC82B***		**14CUC82@***		**14CUC82H***		**14CUC820***	
3	3	—	—	0	—	5.5–22	A1	**14CUD82B***		**14CUD82@***		**14CUD82H***		**14CUD820***	
⅛	⅛	½	½	1	—	0.25–1	A	**14DUA82B***		**14DUA82@***		**14DUA82H***		**14DUA820***	
½	¾	1½	2	1	—	0.75–3.4	A	**14DUB82B***		**14DUB82@***		**14DUB82H***		**14DUB820***	
2	2	5	5	1	—	3–12	A1	**14DUC82B***		**14DUC82@***		**14DUC82H***		**14DUC820***	
3	3	10	10	1	—	5.5–22	A1	**14DUD82B***		**14DUD82@***		**14DUD82H***		**14DUD820***	
7½	7½	—	—	1	—	10–40	A1	**14DUE82B***		**14DUE82@***		**14DUE82H***		**14DUE820***	
10	10	15	15	—	1¾	10–40	A1	**14EUE82B***		**14EUE82@***		**14EUE82H***		**14EUE820***	
10	15	25	25	2	—	13–52	B	**14FUF82B***		**14FUF82@***		**14FUF82H***		**14FUF820***	
15	20	30	30	—	2½	25–100	B	**14GUG82B***		**14GUG82@***		**14GUG82H***		**14GUG820***	
25	30	50	50	3	—	25–100	B	**14HUG82B***		**14HUG82@***		**14HUG82H***		**14HUG820***	
30	40	75	75	—	3½	50–200	B	**14IUH82B***		**14IUH82@***		**14IUH82H***		**14IUH820***	

Note: All starter sizes carry one maximum Hp rating (per the National Electric Code).

① For conduit hubs and conversion instructions, see page 17-112.

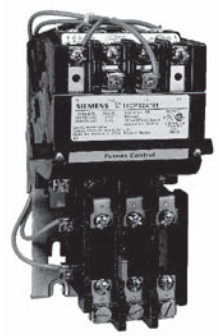

Ordering Information

- Replace the (*) with a letter from the coil table. Dual voltage coils are wired on high voltage unless specified on order.
- Heater elements see page 17-126. Single phase starters require 1 heater element. 3-phase starters require 3 heater elements.
- Field Modification Kits page 17-106.
- Factory Modifications page 17-121.
- Dimensions see page 17-142 open and 17-159 enclosed.
- Wiring Diagrams see page 17-175.
- Replacement Parts see page 17-133.
- For NO/NC SPDT contact on overload relay, replace "81" with "91". "81" indicates one NC contact.

Coil Table

60Hz Voltage	Letter
24	J
120	F
110–120/220–240	A
200–208	D
220–240	G
277	L
220–240/440–480	C
440–480	H
575–600	E

For other voltages and frequencies, see Factory Modifications page 17-121.

Open Type & Standard Width Enclosure, 3-Phase, 3-Pole

Max Hp							Enclosure											
200 Volts	230 Volts	460 Volts	575 Volts	Contactor Amp Rating	NEMA Size	Half Size	Open Type Standard Auxiliary Contacts④		NEMA 1 General Purpose		NEMA 4/4X Stainless② Watertight, Dust-tight Corrosion Resistant @ = W for 304 Stainless @ = X for 316 Stainless Steel		NEMA 4X Fiberglass Watertight, Dust-tight Corrosion Resistant		NEMA 7 & 9 NEMA 3 & 4 Class I Groups C & D Class II Groups E, F & G Class III Bolted Enclosures Indoor/Outdoor Use		NEMA 12 NEMA 3/3R② Industrial Use Weatherproof	
							Catalog No	$	Catalog No	$	Catalog No	$	Catalog No	$	Catalog No	$	Catalog No	$
1½	1½	2	2	9	00	—	14BP32A*81		14BP32B*81		Use Size 0	—	Use Size 0	—	Use Size 0	—	Use Size 0	—
3	3	5	5	18	0	—	14CP32A*81		14CP32B*81		14CP32@*81		14CP32F*81		14CP32H*81		14CP320*81	
7½	7½	10	10	27	1	—	14DP32A*81		14DP32B*81		14DP32@*81		14DP32F*81		14DP32H*81		14DP320*81	
10	10	15	15	40	—	1¾	14EP32A*81		14EP32B*81		14EP32@*81		14EP32F*81		14EP32H*81		14EP320*81	
10	15	25	25	45	2	—	14FP32A*81		14FP32B*81		14FP32@*81		14FP32F*81		14FP32H*81		14FP320*81	
15	20	30	30	60	—	2½	14GP32A*81		14GP32B*81		14GP32@*81		14GP32F*81		14GP32H*81		14GP320*81	
25	30	50	50	90	3	—	14HP32A*81		14HP32B*81		14HP32@*81		14HP32F*81		14HP32H*81		14HP320*81	
30	40	75	75	115	—	3½	14IP32A*81		14IP32B*81		14IP32@*81		14IP32F*81		14IP32H*81		14IP320*81	
40	50	100	100	135	4	—	14JG32A*81		14JG32B*81		14JG32@*81		14JG32F*81		14JG32H*81		14JG320*81	

Open Type & Standard Width Enclosure, Single Phase, 2-Pole③

Max Hp					Enclosure											
115 Volts	208/230 Volts	Contactor Amp Rating	NEMA Size	Half Size	Open Type		NEMA 1 General Purpose		NEMA 4/4X Stainless② Watertight, Dust-tight Corrosion Resistant @ = W for 304 Stainless Steel @ = X for 316 Stainless Steel		NEMA 4X Fiberglass Watertight, Dust-tight Corrosion Resistant Class II Groups E, F & G Class III		NEMA 7 & 9 NEMA 3 & 4 Div 1 and Div 2 Class I Groups C & D Bolted Enclosures		NEMA 12 NEMA 3/3R② Industrial Use Weatherproof	
					Catalog No	$	Catalog No	$	Catalog No	$	Catalog No	$	Catalog No	$	Catalog No	$
⅓	1	9	00	—	14BP12A*81		14BP12B*81		Use Size 0	—	Use Size 0	—	Use Size 0	—	Use Size 0	—
1	2	18	0	—	14CP12A*81		14CP12B*81		14CP12@*81		14CP12F*81		14CP12H*81		14CP120*81	
2	3	27	1	—	14DP12A*81		14DP12B*81		14DP12@*81		14DP12F*81		14DP12H*81		14DP120*81	
3	5	35	1P	—	14EP12A*81		14EP12B*81		14EP12@*81		14EP12F*81		14EP12H*81		14EP120*81	
3	7½	45	2	—	14FP12A*81		14FP12B*81		14FP12@*81		14FP12F*81		14FP12H*81		14FP120*81	
5	10	60	—	2½	14GP12A*81		14GP12B*81		14GP12@*81		14GP12F*81		14GP12H*81		14GP120*81	

Extra Wide Enclosure, 3-Phase, 3-Pole①

Max Hp							Enclosure							
200 Volts	230 Volts	460 Volts	575 Volts	Contactor Amp Rating	NEMA Size	Half Size	NEMA 1 General Purpose		NEMA 4/4X Stainless② Watertight, Dust-tight Corrosion Resistant @ = W for 304 Stainless Steel @ = X for 316 Stainless Steel		NEMA 7 & 9. NEMA 3 & 4 Div 1 and Div 2 Class II Groups E, F & G Bolted Enclosures		NEMA 12. NEMA 3/3R② Industrial Use Weatherproof Class III	
							Catalog No	Price $	Catalog No	Price $	Catalog No	Price $	Catalog No	Price $
1½	1½	2	2	9	00	—	14BP82B*81		Use Size 0	—	Use Size 0	—	Use Size 0	—
3	3	5	5	18	0	—	14CP82B*81		14CP82@*81		14CP82H*81		14CP820*81	
7½	7½	10	10	27	1	—	14DP82B*81		14DP82@*81		14DP82H*81		14DP820*81	
10	10	15	15	40	—	1 3/4	14EP82B*81		14EP82@*81		14EP82H*81		14EP820*81	
10	15	25	25	45	2	—	14FP82B*81		14FP82@*81		14FP82H*81		14FP820*81	
15	20	30	30	60	—	2 1/2	14GP82B*81		14GP82@*81		14GP82H*81		14GP820*81	
25	30	50	50	90	3	—	14HP82B*81		14HP82@*81		14HP82H*81		14HP820*81	
30	40	75	75	115	—	3 1/2	14IP82B*81		14IP82@*81		14IP82H*81		14IP820*81	

Note: Hp's shown above are based on the overload amp range for the FLA's (per the National Electric Code) of typical industrial motors. All Starter Sizes carry one maximum Hp rating. **For higher Hp single phase motors, use 3-phase starters, wire and set per diagram on page 17-175.**

① To receive a single phase starter in an extra wide enclosure, order the enclosure kit from pg 16-91 and the open style starter from pg 16-14 or 16-16 as separate items.

② For conduit hubs and conversion instructions, see page 17-112.

③ Coils D, F, or G will be wired for incoming voltage. J coil will be wired for separate source. Coils E, H, and L do not apply to single phase starters.

④ Standard Auxiliary Contacts, Same as Contactors, refer to page 17-62.

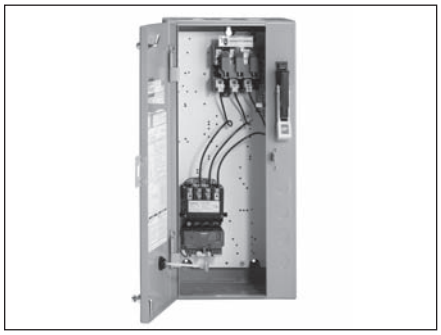

Combination Starter Features

Combination starters include the following features:

- Manufactured with Cold Forming "TOX" Process
- Solid State Overloads Standard on Sizes 5–8
- Easy to Install
- Wide Range of Enclosure Types Available
- Heavy Duty Quarter Turns
- 100kA Short Circuit Current Rating when Protected with Class R Fuses to 600V or MCP to 480V
- Visible Blade Disconnect
- Industrial Type Disconnect Handle
- UL listed file #E185287 (class 17, 18, 25, 26 & 32)
- CSA certified file #LR 6535 (class 17, 18, 25, 26 & 32)

Application

A combination starter meets National Electrical Code requirements for:

1. A means of providing short circuit motor protection with fused or breaker disconnection of line voltage.

2. A means of safeguarding personnel from contact with live parts and from accidental starting of machinery by disconnecting the motor and the controller.

3. A motor controller with overload protection.

Prewired combination starters eliminate the cost of wiring between separate disconnect and starter. Factory testing assures field performance. Combination starters also provide a more compact and attractive installation than separate units.

Enclosure Types

Combination starters are available in NEMA 1, 12/3/3R/4 (painted), 4/4X (stainless), 4X fiberglass and 7 & 9 enclosures. Enclosures protect personnel from contact with live parts and depending upon the construction, protect the control in varying degrees from physical damage and harmful atmospheres. All enclosures are supplied with corrosion resistant finishes.

Heavy Duty Disconnect Switches

The disconnect switch that goes the distance in durability, performance and reliability has the following advantages:

- Visible blades for the highest level of safety
- Double break switching action to reduce arcing, increase lifetime and eliminate the "electric hinge"
- More rugged positive action switch
- Oversized lugs are standard
- Line side shield to help guard personnel from contact with live parts
- Higher horsepower rating for design E high efficiency motors
- UL listed for Ilsco, Burndy and T&B crimp type lugs
- The 200A switch accepts up to 300 MCM versus 250 MCM wire size

Its rugged construction - with a high fault withstand rating of 100kA at 600 VAC when fused with class R rated fuses - meets the most stringent industry standards set forth by the automotive, petro-chemical, and pulp and paper industries. UL recognized and CSA certified, our disconnect switches are available either non-fusible or fusible with class R and class J fuse clips.

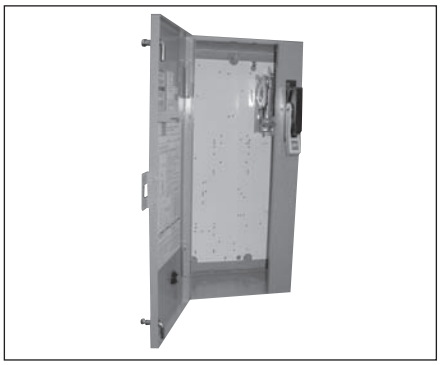

Enclosure Kits for NEMA Combination Starters Description

You can assemble a non-stocked combination starter per your unanticipated needs in minutes. Say, for example, your customer needs a fusible combination starter that you don't have in stock. You need in now, but don't sweat it. Simply start with the enclosure kit which has the handle preinstalled. You install the required starter and fusible disconnect, connect the power wire and you are finished. Within minutes, you have the required combination starter in your hands. No more waiting on the factory. You need it, you got it!

What Is In It For You!

- **Reduce Lead-time -** What used to take days to get now takes minutes
- **Reduced Inventory -** Instead of stocking scores of various combination starters, simply stock a few enclosure kits, disconnect kits, circuit breaker kits and open starters. With these basic "building blocks" you virtually have hundreds of products on-hand
- **Quality -** The same high level of quality you have been accustomed to with our products will also be found in these new enclosure kits
- **UL Listed -** By correctly following the instructions included with the kits, the product you build is UL/CSA Listed

Refer to page 17-117 for more details.

Siemens Type ETI Circuit Breaker

The ETI circuit breaker is a device designed specifically for application in motor circuits. The ETI is a magnetic only protective device designed to provide protection against short circuit current.

The instantaneous-only type ETI circuit breaker employs adjustable magnetic trip settings to allow broader application ranges and a higher degree of motor short circuit protection.

Heavy Duty Starters

These combination starters use the same starters described in the heavy duty starter section of this catalog.

Combination Heavy Duty Starters

Non-Fusible with Solid State Overload, Class 17

Selection

Ordering Information

- Replace the (*) with a letter from the coil table. Dual voltage coils are wired on high voltage unless specified on order.
- For Fusible Styles see page 17-22.
- Field Modification Kits see page 17-106.
- Factory Modifications see page 17-121.
- Dimensions see page 17-161.
- Wiring Diagrams see page 17-176.
- Replacement Parts see page 17-133.

Coil Table

60Hz Voltage	Letter
24	J
120	F
110–120/220–240①	A
200–208	D
220–240	G
277	L
220–240/440–480①	C
440–480	H
575–600	E

For other voltages and frequencies, see Factory Modifications page 17-121.

Standard Width Enclosure, 3 Phase, 3-Pole

Max Hp						Overload			Enclosure							
									NEMA 1 General Purpose		**NEMA 4/4X Stainless**② Watertight, Dust-tight, Corrosion Resistant @ = W for 304 Stainless Steel @ = X for 316 Stainless Steel		**NEMA 4X Fiberglass** Watertight, Dust-tight Corrosion Resistant		**NEMA 12, NEMA 3/3R**②, **NEMA 4 Painted** (thru size 4) Industrial Use Weatherproof Watertight, Dust-tight	
200 Volts	230 Volts	460 Volts	575 Volts	NEMA Size	Half Size	Amp Range	Frame Size	Disc. Amp Range	Catalog Number	List Price $	Catalog Number	List Price $	Catalog Number	List Price $	Catalog Number	List Price $
⅛	⅛	½	½	0	—	0.25–1	A	30	**17CUA92B***		**17CUA92@***		**17CUA92F***		**17CUA92N***	
½	¾	1½	2	0	—	0.75–3.4	A	30	**17CUB92B***		**17CUB92@***		**17CUB92F***		**17CUB92N***	
2	2	5	5	0	—	3–12	A1	30	**17CUC92B***		**17CUC92@***		**17CUC92F***		**17CUC92N***	
3	3	—	—	0	—	5.5–22	A1	30	**17CUD92B***		**17CUD92@***		**17CUD92F***		**17CUD92N***	
⅛	⅛	½	½	1	—	0.25–1	A	30	**17DUA92B***		**17DUA92@***		**17DUA92F***		**17DUA92N***	
½	¾	1½	2	1	—	0.75–3.4	A	30	**17DUB92B***		**17DUB92@***		**17DUB92F***		**17DUB92N***	
2	2	5	5	1	—	3–12	A1	30	**17DUC92B***		**17DUC92@***		**17DUC92F***		**17DUC92N***	
3	3	10	10	1	—	5.5–22	A1	30	**17DUD92B***		**17DUD92@***		**17DUD92F***		**17DUD92N***	
7½	7½	—	—	1	—	10–40	A1	60	**17DUE92B***		**17DUE92@***		**17DUE92F***		**17DUE92N***	
10	10	15	15	—	1¾	10–40	A1	60	**17EUE92B***		**17EUE92@***		**17EUE92F***		**17EUE92N***	
10	15	25	25	2	—	13–52	B	60	**17FUF92B***		**17FUF92@***		**17FUF92F***		**17FUF92N***	
15	20	30	30	—	2½	25–100	B	100③	**17GUG92B***		**17GUG92@***		**17GUG92F***		**17GUG92N***	
20④	25⑤	50	50	3	—	25–100	B	100	**17HUG92B***		**17HUG92@***		**17HUG92F***		**17HUG92N***	
30	40	75	75	—	3½	50–200	B	200	**17IUH92B***		**17IUH92@***		**17IUH92F***		**17IUH92N***	
40	50	100	100	4	—	50–200	B	200	**17JUH92B***		**17JUH92@***		**17JUH92F***		**17JUH92N***	
75	100	200	200	5	—	55–250	—	400⑥	**17LPU92B***		**17LPU92E***⑦		—	—	**17LPU92N***	
150	200	400	400	6	—	160–630	—	600	**17MPX92B***		**17MPX92E***⑦		—	—	**17MPX92N***	
—	300	600	600	7⑨	—	400–1220	A1+CT	1200	**17NUN92B***		—	—	—	—	**17NUN92N***	
—	450	900	900	8⑩	—	400–1220	A1+CT	1600	**17PUN92B***		—	—	—	—	**17PUN92N***	

Note: All starter sizes carry one maximum Hp rating (per the National Electric Code).

① Dual voltage coils not available in starter sizes 5–8.
② For conduit hubs and conversion instructions, see page 17-112.
③ For 60A disconnect, order fusible cat. no. page 17-22.
④ For 25 HP and 200A disconnect, order fusible cat. no. page 17-22.
⑤ For 30HP and 200A disconnect, order fusible cat. no. page 17-22.
⑥ For 600A disconnect, order fusible cat. no. page 17-22.
⑦ Enclosure is NEMA Type 4 (painted steel).
⑧ F coil 100-250V AC 50/60Hz, or DC, H coil 150-500V AC 50/60Hz, or DC
⑩ Only available F coil 100-250V AC 50/60Hz, or DC

Ordering Information

- Replace the (*) with a letter from the coil table. Dual voltage coils are wired on high voltage unless specified on order.
- For Fusible Styles see page 17-23.
- Field Modification Kits see page 17-106.
- Factory Modifications see page 17-121.
- Dimensions see page 17-161.
- Wiring Diagrams see page 17-176.
- Replacement Parts see page 17-133.

Coil Table

60Hz Voltage	Letter
24	J
120	F
110–120/220–240②	A
200–208	D
220–240	G
277	L
220–240/440–480②	C
440–480	H
575–600	E

For other voltages and frequencies, see Factory Modifications page 17-121.

Extra Wide Enclosure, 3-Phase, 3-Pole

Hp						Overload			Enclosure					
									NEMA 1 General Purpose		NEMA 4/4X Stainless③ Watertight, Dust-tight, Corrosion Resistant @ = W for 304 Stainless Steel @ = X for 316 Stainless Steel		NEMA 12, NEMA 3/3R③, NEMA 4 Painted Industrial Use Weatherproof Watertight, Dust-tight	
200 Volts	230 Volts	460 Volts	575 Volts	NEMA Size	Half Size	Amp Range	Frame Size	Disc. Amp Range	Catalog Number	List Price $	Catalog Number	List Price $	Catalog Number	List Price $
⅛	⅛	⅓	½	0	—	0.25–1	A	30	**17CUA82B***		**17CUA82@***		**17CUA82N***	
½	¾	1½	2	0	—	0.75–3.4	A	30	**17CUB82B***		**17CUB82@***		**17CUB82N***	
2	2	5	5	0	—	3–12	A1	30	**17CUC82B***		**17CUC82@***		**17CUC82N***	
3	3	—	—	0	—	5.5–22	A1	30	**17CUD82B***		**17CUD82@***		**17CUD82N***	
⅛	⅛	⅓	½	1	—	0.25–1	A	30	**17DUA82B***		**17DUA82@***		**17DUA82N***	
½	¾	1½	2	1	—	0.75–3.4	A	30	**17DUB82B***		**17DUB82@***		**17DUB82N***	
2	2	5	5	1	—	3–12	A1	30	**17DUC82B***		**17DUC82@***		**17DUC82N***	
3	3	10	10	1	—	5.5–22	A1	30	**17DUD82B***		**17DUD82@***		**17DUD82N***	
7½	7½	—	—	1	—	10–40	A1	60	**17DUE82B***		**17DUE82@***		**17DUE82N***	
10	10	15	15	—	1¾	10–40	A1	60	**17EUE82B***		**17EUE82@***		**17EUE82N***	
10	15	25	25	2	—	13–52	B	60	**17FUF82B***		**17FUF82@***		**17FUF82N***	
15	20	30	30	—	2½	25–100	B	100③	**17GUG82B***		**17GUG82@***		**17GUG82N***	
20④	25⑤	50	50	3	—	25–100	B	100	**17HUG82B***		**17HUG82@***		**17HUG82N***	

Note: All starter sizes carry one maximum Hp rating (per the National Electric Code).

① For conduit hubs and conversion instructions, see page 17-112.

② For 60A disconnect, order fusible cat. no. page 17-23.

③ For 25 HP and 200A disconnect, order fusible cat. no. page 17-23.

④ For 30HP and 200A disconnect, order fusible cat. no. page 17-23.

Ordering Information

- Replace the (*) with a letter from the coil table. Dual voltage coils are wired on high voltage unless specified on order.
- Heater elements see page 17-126. (3 required)
- Field Modification Kits see page 17-106.
- Factory Modifications see page 17-121.
- Dimensions see page 17-161.
- Wiring Diagrams see page 17-176.
- Replacement Parts see page 17-133.
- For NO/NC SPDT contact on overload relay, replace "81" with "91". "81" indicates one NC contact.

Coil Table

60Hz Voltage	Letter
24	J
120	F
110–120/220–240①	A
200–208	D
220–240	G
277	L
220–240/440–480①	C
440–480	H
575–600	E

For other voltages and frequencies, see Factory Modifications page 17-121.

Standard Width Enclosure, 3-Phase, 3-Pole

Max Hp							Enclosure							
200 Volts	230 Volts	460 Volts	575 Volts	NEMA Size	Half Size	Disc Amp Rating	NEMA 1 General Purpose		NEMA 4/4X Stainless① Watertight, Dust-tight Corrosion Resistant @ = W for 304 Stainless Steel @ = X for 316 Stainless Steel		NEMA 4X Fiberglass Watertight, Dust-tight Corrosion Resistant Weatherproof		NEMA 12, NEMA 3/3R,① NEMA 4 Painted Industrial Use Watertight, Dust-tight	
							Catalog Number	List Price $	Catalog Number	List Price $	Catalog Number	List Price $	Catalog Number	List Price $
3	3	5	5	0	—	30	17CP92B*81		17CP92@*81		17CP92F*81		17CP92N*81	
7½③	7½③	10	10	1	—	30	17DP92B*81		17DP92@*81		17DP92F*81		17DP92N*81	
10	10	15	15	—	1¾	60	17EP92B*81		17EP92@*81		17EP92F*81		17EP92N*81	
10	15	25	25	2	—	60	17FP92B*81		17FP92@*81		17FP92F*81		17FP92N*81	
15	20	30	30	—	2½	100	17GP92B*81		17GP92@*81		17GP92F*81		17GP92N*81	
25④	30④	50	50	3	—	100	17HP92B*81		17HP92@*81		17HP92F*81		17HP92N*81	
30	40	75	75	—	3½	200	17IP92B*81		17IP92@*81		17IP92F*81		17IP92N*81	
40	50	100	100	4	—	200	17JP92B*81		17JP92@*81		17JP92F*81		17JP92N*81	

Extra Wide Enclosure, 3-Phase, 3-Pole

Max Hp							Enclosure					
200 Volts	230 Volts	460 Volts	575 Volts	NEMA Size	Half Size	Disc Amp Rating	NEMA 1 General Purpose		NEMA 4/4X Stainless① Watertight, Dust-tight Corrosion Resistant @ = W for 304 Stainless Steel @ = X for 316 Stainless Steel		NEMA 12, NEMA 3/3R,① NEMA 4 Painted Industrial Use Weatherproof Watertight, Dust-tight	
							Catalog Number	List Price $	Catalog Number	List Price $	Catalog Number	List Price $
3	3	5	5	0	—	30	17CP82B*81		17CP82@*81		17CP82N*81	
7½③	7½③	10	10	1	—	30	17DP82B*81		17DP82@*81		17DP82N*81	
10	10	15	15	—	1¾	60	17EP82B*81		17EP82@*81		17EP82N*81	
10	15	25	25	2	—	60	17FP82B*81		17FP82@*81		17FP82N*81	
15	20	30	30	—	2½	100	17GP82B*81		17GP82@*81		17GP82N*81	
25④	30④	50	50	3	—	100	17HP82B*81		17HP82@*81		17HP82N*81	

Standard Width Enclosure, Single Phase, (Catalog Numbers are three phase, wire for single phase in the field)

Max Hp					Enclosure							
115 Volts	208/230 Volts	NEMA Size	Half Size	Disc Amp Rating	NEMA 1 General Purpose		NEMA 4/4X Stainless③ Watertight, Dust-tight Corrosion Resistant @ = W for 304 Stainless Steel @ = X for 316 Stainless Steel		NEMA 4X Fiberglass Watertight, Dust-tight Corrosion Resistant		NEMA 12, NEMA 3/3R,③ NEMA 4 Painted Industrial Use Weatherproof Watertight, Dust-tight	
					Catalog Number	List Price $	Catalog Number	List Price $	Catalog Number	List Price $	Catalog Number	List Price $
1	2	0	—	30	17CP92B*81		17CP92@*81		17CP92F*81		17CP92N*81	
2	3	1	—	30	17DP92B*81		17DP92@*81		17DP92F*81		17DP92N*81	
3	5	1P	—	60	17EP92B*81		17EP92@*81		17EP92F*81		17EP92N*81	
3	7½	2	—	60	17FP92B*81		17FP92@*81		17FP92F*81		17FP92N*81	
5	10	—	2½	100	17GP92B*81		17GP92@*81		17GP92F*81		17GP92N*81	

Note: Hp's shown above are based on the overload amp range for the FLA's (per the National Electric Code) of typical industrial motors. All starter sizes carry one maximum Hp rating.

① For conduit hubs and conversion instructions, see page 17-112.

② For 60A disc, order fusible cat. no. page 17-24.
③ For 200A disc, order fusible cat. no. page 17-24.

Ordering Information

- Replace the (*) with a letter from the coil table. Dual voltage coils are wired on high voltage unless specified on order.
- Field Modification Kits see page 17-106.
- Factory Modifications see page 17-121.
- Dimensions see page 17-161.
- Wiring Diagrams see page 17-176.
- Replacement Parts see page 17-133.

Coil Table

60Hz Voltage	Letter
24	J
120	F
110–120/220–240①	A
200–208	D
220–240	G
277	L
220–240/440–480①	C
440–480	H
575–600	E

For other voltages and frequencies, see Factory Modifications page 17-121.

Standard Width Enclosure, 3-Phase, 3-Pole⑤

Max Hp						Overload				Enclosure							
										NEMA 1 General Purpose		NEMA 4/4X Stainless② Watertight, Dust-tight, Corrosion Resistant @ = W for 304 Stainless Steel @ = X for 316 Stainless Steel		NEMA 4X Fiberglass Watertight, Dust-tight Corrosion Resistant		NEMA 12, NEMA 3/3R②, NEMA 4 Painted (thru size 4) Industrial Use Weatherproof Watertight, Dust-tight	
200 Volts	230 Volts	460 Volts	575 Volts	NEMA Size	Half Size	Amp Range	Frame Size	Disc. Amp Range	Fuse Clip Amp/Volts	Catalog Number	List Price $	Catalog Number	List Price $	Catalog Number	List Price $	Catalog Number	List Price $
⅛	⅛	—	—	0	—	0.25–1	A	30	30A/250V	**17CUA92B*10**		**17CUA92@*10**		**17CUA92F*10**		**17CUA92N*10**	
—	—	⅓	½	0	—	0.25–1	A	30	30A/600V	**17CUA92B*11**		**17CUA92@*11**		**17CUA92F*11**		**17CUA92N*11**	
½	¾	—	—	0	—	0.75–3.4	A	30	30A/250V	**17CUB92B*10**		**17CUB92@*10**		**17CUB92F*10**		**17CUB92N*10**	
—	—	1½	2	0	—	0.75–3.4	A	30	30A/600V	**17CUB92B*11**		**17CUB92@*11**		**17CUB92F*11**		**17CUB92N*11**	
2	2	—	—	0	—	3–12	A1	30	30A/250V	**17CUC92B*10**		**17CUC92@*10**		**17CUC92F*10**		**17CUC92N*10**	
—	—	5	5	0	—	3–12	A1	30	30A/600V	**17CUC92B*11**		**17CUC92@*11**		**17CUC92F*11**		**17CUC92N*11**	
3	3	—	—	0	—	5.5–22	A1	30	30A/250V	**17CUD92B*10**		**17CUD92@*10**		**17CUD92F*10**		**17CUD92N*10**	
⅛	⅛	—	—	1	—	0.25–1	A	30	30A/250V	**17DUA92B*10**		**17DUA92@*10**		**17DUA92F*10**		**17DUA92N*10**	
—	—	⅓	½	1	—	0.25–1	A	30	30A/600V	**17DUA92B*11**		**17DUA92@*11**		**17DUA92F*11**		**17DUA92N*11**	
½	¾	—	—	1	—	0.75–3.4	A	30	30A/250V	**17DUB92B*10**		**17DUB92@*10**		**17DUB92F*10**		**17DUB92N*10**	
—	—	1½	2	1	—	0.75–3.4	A	30	30A/600V	**17DUB92B*11**		**17DUB92@*11**		**17DUB92F*11**		**17DUB92N*11**	
2	2	—	—	1	—	3–12	A1	30	30A/250V	**17DUC92B*10**		**17DUC92@*10**		**17DUC92F*10**		**17DUC92N*10**	
—	—	5	5	1	—	3–12	A1	30	30A/600V	**17DUC92B*11**		**17DUC92@*11**		**17DUC92F*11**		**17DUC92N*11**	
3	3	—	—	1	—	5.5–22	A1	30	30A/250V	**17DUD92B*10**		**17DUD92@*10**		**17DUD92F*10**		**17DUD92N*10**	
—	—	10	10	1	—	5.5–22	A1	30	30A/600V	**17DUD92B*11**		**17DUD92@*11**		**17DUD92F*11**		**17DUD92N*11**	
7½	7½	—	—	1	—	10–40	A1	30	30A/250V	**17DUE92B*10**		**17DUE92@*10**		**17DUE92F*10**		**17DUE92N*10**	
7½	7½	—	—	1	—	10–40	A1	60	60A/250V	**17DUE92B*12**		**17DUE92@*12**		**17DUE92F*12**		**17DUE92N*12**	
—	—	15	15	—	1¾	10–40	A1	60	60A/600V	**17EUE92B*13**		**17EUE92@*13**		**17EUE92F*13**		**17EUE92N*13**	
10	10	—	—	—	1¾	10–40	A1	60	60A/250V	**17EUE92B*12**		**17EUE92@*12**		**17EUE92F*12**		**17EUE92N*12**	
10	15	—	—	2	—	13–52	B	60	60A/250V	**17FUF92B*12**		**17FUF92@*12**		**17FUF92F*12**		**17FUF92N*12**	
—	—	25	25	2	—	13–52	B	60	60A/600V	**17FUF92B*13**		**17FUF92@*13**		**17FUF92F*13**		**17FUF92N*13**	
—	—	—	30	—	2½	25–100	B	60	60A/600V	**17GUG92B*13**		**17GUG92@*13**		**17GUG92F*13**		**17GUG92N*13**	
—	—	30	—	—	2½	25–100	B	100	100A/600V	**17GUG92B*15**		**17GUG92@*15**		**17GUG92F*15**		**17GUG92N*15**	
15	20	—	—	—	2½	25–100	B	100	100A/250V	**17GUG92B*14**		**17GUG92@*14**		**17GUG92F*14**		**17GUG92N*14**	
20	25	—	—	3	—	25–100	B	100	100A/250V	**17HUG92B*14**		**17HUG92@*14**		**17HUG92F*14**		**17HUG92N*14**	
—	—	50	50	3	—	25–100	B	100	100A/600V	**17HUG92B*15**		**17HUG92@*15**		**17HUG92F*15**		**17HUG92N*15**	
25	30	—	—	3	—	25–100	B	200	200A/250V	**17HUG92B*16**		**17HUG92@*16**		**17HUG92F*16**		**17HUG92N*16**	
30	40	—	—	—	3½	50–200	B	200	200A/250V	**17IUH92B*16**		**17IUH92@*16**		**17IUH92F*16**		**17IUH92N*16**	
—	—	75	75	—	3½	50–200	B	200	200A/600V	**17IUH92B*17**		**17IUH92@*17**		**17IUH92F*17**		**17IUH92N*17**	
40	50	—	—	4	—	50–200	B	200	200A/250V	**17JUH92B*16**		**17JUH92@*16**		**17JUH92F*16**		**17JUH92N*16**	
—	—	100	100	4	—	50–200	B	200	200A/600V	**17JUH92B*17**		**17JUH92@*17**		**17JUH92F*17**		**17JUH92N*17**	
75	100	—	—	5	—	55–250	—	400	400A/250V	**17LPU92B*18**		**17LPU92E*18④**		—	—	**17LPU92N*18**	
—	100	—	—	5	—	55–250	—	600	600A/250V③	**17LPU92B*20**		**17LPU92E*20④**		—	—	**17LPU92N*20**	
—	—	—	125	5	—	55–250	—	200	200A/600V	**17LPU92B*17**		**17LPU92E*17④**		—	—	**17LPU92N*17**	
—	—	200	200	5	—	55–250	—	400	400A/600V	**17LPU92B*19**		**17LPU92E*19④**		—	—	**17LPU92N*19**	
—	—	200	—	5	—	55–250	—	600	600A/600V③	**17LPU92B*21**		**17LPU92E*21④**		—	—	**17LPU92N*21**	
150	200	—	—	6	—	160–630	—	600	600A/250V	**17MPX92B*20**		**17MPX92E*20④**		—	—	**17MPX92N*20**	
—	—	400	400	6	—	160–630	—	600	600A/600V	**17MPX92B*21**		**17MPX92E*21④**		—	—	**17MPX92N*21**	
—	—	400	400	6	—	160–630	—	800	800A/600V	**17MPX92B*23**		**17MPX92E*23④**		—	—	**17MPX92N*23**	
—	—	600	600	7⑥	—	400–1220	A1+CT	1200	1200A/600V	**17NUN92B*24**		—	—	—	—	**17NUN92N*24**	
—	—	900	900	8⑦	—	400–1220	A1+CT	1600	1600A/600V	**17PUN92B*25**		—	—	—	—	**17PUN92N*25**	

Note: All starter sizes carry one maximum Hp rating (per the National Electric Code).

① Dual voltage coils not available in starter sizes 5–8.
② For conduit hubs and conversion instructions, see page 17-112.
③ Use Class J fuses only.
④ Enclosure is NEMA Type 4 (painted steel).
⑤ Single phase wiring page 17-175.
⑥ F coil 100-250V AC 50/60Hz, or DC, H coil 150-500V AC 50/60Hz, or DC
⑦ Only available F coil 100-250V AC 50/60Hz, or DC

Ordering Information

- Replace the (*) with a letter from the coil table. Dual voltage coils are wired on high voltage unless specified on order.
- Field Modification Kits see page 17-106.
- Factory Modifications see page 17-121.
- Dimensions see page 17-161.
- Wiring Diagrams see page 17-176.
- Replacement Parts see page 17-133.

Coil Table

60Hz Voltage	Letter
24	J
120	F
110–120/220–240	A
200–208	D
220–240	G
277	L
220–240/440–480	C
440–480	H
575–600	E

For other voltages and frequencies, see Factory Modifications page 17-121.

Extra Wide Enclosure, 3-Phase, 3-Pole

Max Hp						Overload				Enclosure					
										NEMA 1 General Purpose		NEMA 4/4X Stainless① Watertight, Dust-tight, @ = W for 304 Stainless Steel @ = X for 316 Stainless Steel		NEMA 12, NEMA 3/3R①, NEMA 4 Painted Industrial Use Weatherproof Watertight, Dust-tight	
200 Volts	230 Volts	460 Volts	575 Volts	NEMA Size	Half Size	Amp Range	Frame Size	Disc. Amp Range	Fuse Clip Amp/Volts	Catalog Number	List Price $	Catalog Number	List Price $	Catalog Number	List Price $
⅛	⅛	—	—	0	—	0.25–1	A	30	30A/250V	**17CUA82B*10**		**17CUA82@*10**		**17CUA82N*10**	
—	—	⅓	½	0	—	0.25–1	A	30	30A/600V	**17CUA82B*11**		**17CUA82@*11**		**17CUA82N*11**	
½	¾	—	—	0	—	0.75–3.4	A	30	30A/250V	**17CUB82B*10**		**17CUB82@*10**		**17CUB82N*10**	
—	—	1½	2	0	—	0.75–3.4	A	30	30A/600V	**17CUB82B*11**		**17CUB82@*11**		**17CUB82N*11**	
2	2	—	—	0	—	3–12	A1	30	30A/250V	**17CUC82B*10**		**17CUC82@*10**		**17CUC82N*10**	
—	—	5	5	0	—	3–12	A1	30	30A/600V	**17CUC82B*11**		**17CUC82@*11**		**17CUC82N*11**	
3	3	—	—	0	—	5.5–22	A1	30	30A/250V	**17CUD82B*10**		**17CUD82@*10**		**17CUD82N*10**	
⅛	⅛	—	—	1	—	0.25–1	A	30	30A/250V	**17DUA82B*10**		**17DUA82@*10**		**17DUA82N*10**	
—	—	⅓	½	1	—	0.25–1	A	30	30A/600V	**17DUA82B*11**		**17DUA82@*11**		**17DUA82N*11**	
½	¾	—	—	1	—	0.75–3.4	A	30	30A/250V	**17DUB82B*10**		**17DUB82@*10**		**17DUB82N*10**	
—	—	1½	2	1	—	0.75–3.4	A	30	30A/600V	**17DUB82B*11**		**17DUB82@*11**		**17DUB82N*11**	
2	2	—	—	1	—	3–12	A1	30	30A/250V	**17DUC82B*10**		**17DUC82@*10**		**17DUC82N*10**	
—	—	5	5	1	—	3–12	A1	30	30A/600V	**17DUC82B*11**		**17DUC82@*11**		**17DUC82N*11**	
3	3	—	—	1	—	5.5–22	A1	30	30A/250V	**17DUD82B*10**		**17DUD82@*10**		**17DUD82N*10**	
—	—	10	10	1	—	5.5–22	A1	30	30A/600V	**17DUD82B*11**		**17DUD82@*11**		**17DUD82N*11**	
5	5	—	—	1	—	10–40	A1	30	30A/250V	**17DUE82B*10**		**17DUE82@*10**		**17DUE82N*10**	
7½	7½	—	—	1	—	10–40	A1	60	60A/250V	**17DUE82B*12**		**17DUE82@*12**		**17DUE82N*12**	
—	—	15	15	—	1¾	10–40	A1	60	60A/600V	**17EUE82B*13**		**17EUE82@*13**		**17EUE82N*13**	
10	10	—	—	—	1¾	10–40	A1	60	60A/250V	**17EUE82B*12**		**17EUE82@*12**		**17EUE82N*12**	
10	15	—	—	2	—	13–52	B	60	60A/250V	**17FUF82B*12**		**17FUF82@*12**		**17FUF82N*12**	
—	—	25	25	2	—	13–52	B	60	60A/600V	**17FUF82B*13**		**17FUF82@*13**		**17FUF82N*13**	
—	—	—	30	—	2½	25–100	B	60	60A/600V	**17GUG82B*13**		**17GUG82@*13**		**17GUG82N*13**	
—	—	30	—	—	2½	25–100	B	100	100A/600V	**17GUG82B*15**		**17GUG82@*15**		**17GUG82N*15**	
15	20	—	—	—	2½	25–100	B	100	100A/250V	**17GUG82B*14**		**17GUG82@*14**		**17GUG82N*14**	
20	25	—	—	3	—	25–100	B	100	100A/250V	**17HUG82B*14**		**17HUG82@*14**		**17HUG82N*14**	
—	—	50	50	3	—	25–100	B	100	100A/600V	**17HUG82B*15**		**17HUG82@*15**		**17HUG82N*15**	
25	30	—	—	3	—	25–100	B	200	200A/250V	**17HUG82B*16**		**17HUG82@*16**		**17HUG82N*16**	

Note: All starter sizes carry one maximum Hp rating (per the National Electric Code).

① For conduit hubs and conversion instructions, see page 17-112.

Ordering Information

- Replace the (*) with a letter from the coil table. Dual voltage coils are wired on high voltage unless specified on order.
- Heater elements see page 17-126. (3 required)
- Field Modification Kits see page 17-106.
- Factory Modifications see page 17-121.
- Dimensions see page 17-161.
- Wiring Diagrams see page 17-176.
- Replacement Parts see page 17-133.
- For NO/NC SPDT contact on overload relay, replace "81" with "91". "81" indicates one NC contact.

Coil Table

60Hz Voltage	Letter
24	J
120	F
110–120/220–240	A
200–208	D
220–240	G
277	L
220–240/440–480	C
440–480	H
575–600	E

For other voltages and frequencies, see Factory Modifications page 17-121.

Standard Width Enclosure, 3-Phase, 3-Pole②

Max Hp								Enclosure							
								NEMA 1 General Purpose		NEMA 4/4X Stainless① Watertight, Dust-tight Corrosion Resistant @ = W for 304 Stainless Steel @ = X for 316 Stainless Steel		NEMA 4X Fiberglass Watertight, Dust-tight Corrosion Resistant		NEMA 12, NEMA 3/3R,① NEMA 4 Painted Industrial Use Weatherproof Watertight, Dust-tight	
200 Volts	230 Volts	460 Volts	575 Volts	NEMA Size	Half Size	Disc Amp Rating	Fuse Clip Size Amps/Volts	Catalog Number	List Price $	Catalog Number	List Price $	Catalog Number	List Price $	Catalog Number	List Price $
3	3	—	—	0	—	30	30A/250V	17CP92B*1081		17CP92@*1081		17CP92F*1081		17CP92N*1081	
—	—	5	5	0	—	30	30A/600V	17CP92B*1181		17CP92@*1181		17CP92F*1181		17CP92N*1181	
5	5	—	—	1	—	30	30A/250V	17DP92B*1081		17DP92@*1081		17DP92F*1081		17DP92N*1081	
—	—	10	10	1	—	30	30A/600V	17DP92B*1181		17DP92@*1181		17DP92F*1181		17DP92N*1181	
7½	7½	—	—	1	—	60	60A/250V	17DP92B*1281		17DP92@*1281		17DP92F*1281		17DP92N*1281	
10	10	—	—	—	1¾	60	60A/250V	17EP92B*1281		17EP92@*1281		17EP92F*1281		17EP92N*1281	
—	—	15	15	—	1¾	60	60A/600V	17EP92B*1381		17EP92@*1381		17EP92F*1381		17EP92N*1381	
10	15	—	—	2	—	60	60A/250V	17FP92B*1281		17FP92@*1281		17FP92F*1281		17FP92N*1281	
—	—	25	25	2	—	60	60A/600V	17FP92B*1381		17FP92@*1381		17FP92F*1381		17FP92N*1381	
—	—	—	30	—	2½	60	60A/600V	17GP92B*1381		17GP92@*1381		17GP92F*1381		17GP92N*1381	
—	—	30	—	—	2½	100	100A/600V	17GP92B*1581		17GP92@*1581		17GP92F*1581		17GP92N*1581	
15	20	—	—	—	2½	100	100A/250V	17GP92B*1481		17GP92@*1481		17GP92F*1481		17GP92N*1481	
20	25	—	—	3	—	100	100A/250V	17HP92B*1481		17HP92@*1481		17HP92F*1481		17HP92N*1481	
—	—	50	50	3	—	100	100A/600V	17HP92B*1581		17HP92@*1581		17HP92F*1581		17HP92N*1581	
25	30	—	—	3	—	200	200A/250V	17HP92B*1681		17HP92@*1681		17HP92F*1681		17HP92N*1681	
30	40	—	—	—	3½	200	200A/250V	17IP92B*1681		17IP92@*1681		17IP92F*1681		17IP92N*1681	
—	—	75	75	—	3½	200	200A/600V	17IP92B*1781		17IP92@*1781		17IP92F*1781		17IP92N*1781	
40	50	—	—	4	—	200	200A/250V	17JP92B*1681		17JP92@*1681		17JP92F*1681		17JP92N*1681	
—	—	100	100	4	—	200	200A/600V	17JP92B*1781		17JP92@*1781		17JP92F*1781		17JP92N*1781	

Extra Wide Enclosure, 3-Phase, 3-Pole

Max Hp								Enclosure					
								NEMA 1 General Purpose		NEMA 4/4X Stainless① Watertight, Dust-tight Industrial Use Weatherproof @ = W for 304 Stainless Steel @ = X for 316 Stainless Steel		NEMA 12, NEMA 3/3R,① NEMA 4 Painted Industrial Use Weatherproof Watertight, Dust-tight	
200 Volts	230 Volts	460 Volts	575 Volts	NEMA Size	Half Size	Disc Amp Rating	Fuse Clip Size Amps/Volts	Catalog Number	List Price $	Catalog Number	List Price $	Catalog Number	List Price $
3	3	—	—	0	—	30	30A/250V	17CP82B*1081		17CP82@*1081		17CP82N*1081	
—	—	5	5	0	—	30	30A/600V	17CP82B*1181		17CP82@*1181		17CP82N*1181	
5	5	—	—	1	—	30	30A/250V	17DP82B*1081		17DP82@*1081		17DP82N*1081	
—	—	10	10	1	—	30	30A/600V	17DP82B*1181		17DP82@*1181		17DP82N*1181	
7½	7½	—	—	1	—	60	60A/250V	17DP82B*1281		17DP82@*1281		17DP82N*1281	
10	10	—	—	—	1¾	60	60A/250V	17EP82B*1281		17EP82@*1281		17EP82N*1281	
—	—	15	15	—	1¾	60	60A/600V	17EP82B*1381		17EP82@*1381		17EP82N*1381	
10	15	—	—	2	—	60	60A/250V	17FP82B*1281		17FP82@*1281		17FP82N*1281	
—	—	25	25	2	—	60	60A/600V	17FP82B*1381		17FP82@*1381		17FP82N*1381	
—	—	—	30	—	2½	60	60A/600V	17GP82B*1381		17GP82@*1381		17GP82N*1381	
—	—	30	—	—	2½	100	100A/600V	17GP82B*1581		17GP82@*1581		17GP82N*1581	
15	20	—	—	—	2½	100	100A/250V	17GP82B*1481		17GP82@*1481		17GP82N*1481	
20	25	—	—	3	—	100	100A/250V	17HP82B*1481		17HP82@*1481		17HP82N*1481	
—	—	50	50	3	—	100	100A/600V	17HP82B*1581		17HP82@*1581		17HP82N*1581	
25	30	—	—	3	—	200	200A/250V	17HP82B*1681		17HP82@*1681		17HP82N*1681	

Note: Hp's shown above are based on the overload amp range for the FLA's (per the National Electric Code) of typical industrial motors. All starter sizes carry one maximum Hp rating.

① For conduit hubs and conversion instructions, see page 17-112.

② Single phase wiring page 17-175.

Ordering Information

- Replace the (*) with a letter from the coil table. Dual voltage coils are wired on high voltage unless specified on order.
- Field Modification Kits see page 17-106.
- Factory Modifications see page 17-121.
- Dimensions see page 17-161.
- Wiring Diagrams see page 17-176.
- Replacement Parts see page 17-133.

Coil Table

60Hz Voltage	Letter
24	J
120	F
110–120/220–240①	A
200–208	D
220–240	G
277	L
220–240/440–480①	C
440–480	H
575–600	E

For other voltages and frequencies, see Factory Modifications page 17-121.

Standard Width Enclosure, 3-Phase, 3-Pole

Max Hp							Overload		Enclosure									
									NEMA 1 General Purpose		**NEMA 4/4X Stainless②** Watertight, Dust-tight, Corrosion Resistant @ = W for 304 Stainless Steel @ = X for 316 Stainless Steel		**NEMA 4X Fiberglass** Watertight, Dust-tight Corrosion Resistant		**NEMA 7 & 9 NEMA 3 & 4** Div. 1 and Div. 2 Class I Groups C & D Class II Groups E, F & G Class III Bolted Enclosures Indoor/Outdoor Use		**NEMA 12, NEMA 3/3R②, NEMA 4 Painted (thru size 4)** Industrial Use Weatherproof Watertight, Dust-tight	
200 Volts	**230 Volts**	**460 Volts**	**575 Volts**	**NEMA Size**	**Half Size**	**Motor Circuit Interruter ETI Amps**	**Amp Range**	**Frame Size**	**Catalog Number**	**List Price $**	**Catalog Number**	**List Price $**	**Catalog Number**	**List Price $**	**Catalog Number**	**List Price $**	**Catalog Number**	**List Price $**
½	½	1	1	0	—	3	0.75–3.4	A	**18CUB92B***		**18CUB92@***		**18CUB92F***		**18CUB92H***		**18CUB92N***	
2	2	5	5	0	—	10	3–12	A1	**18CUC92B***		**18CUC92@***		**18CUC92F***		**18CUC92H***		**18CUC92N***	
3	3	—	—	0	—	25	5.5–22	A1	**18CUD92B***		**18CUD92@***		**18CUD92F***		**18CUD92H***		**18CUD92N***	
½	½	1	1	1	—	3	0.75–3.4	A	**18DUB92B***		**18DUB92@***		**18DUB92F***		**18DUB92H***		**18DUB92N***	
2	2	5	5	1	—	10	3–12	A1	**18DUC92B***		**18DUC92@***		**18DUC92F***		**18DUC92H***		**18DUC92N***	
3	3	7 ½	10	1	—	25	5.5–22	A1	**18DUD92B***		**18DUD92@***		**18DUD92F***		**18DUD92H***		**18DUD92N***	
7 ½	7 ½	10	—	1	—	30	10–40	A1	**18DUE92B***		**18DUE92@***		**18DUE92F***		**18DUE92H***		**18DUE92N***	
—	—	15	15	—	1¾	40	10–40	A1	**18EUE92B***		**18EUE92@***		**18EUE92F***		**18EUE92H***		**18EUE92N***	
10	15	25	25	2	—	50	13–52	B	**18FUF92B***		**18FUF92@***		**18FUF92F***		**18FUF92H***		**18FUF92N***	
15	20	30	30	—	2 ½	100	25–100	B	**18GUG92B***		**18GUG92@***		**18GUG92F***		**18GUG92H***		**18GUG92N***	
25	30	50	50	3	—	125	25–100	B	**18HUG92B***		**18HUG92@***		**18HUG92F***		**18HUG92H***		**18HUG92N***	
30	40	75	75	—	3 ½	125	50–200	B	**18IUH92B***		**18IUH92@***		**18IUH92F***		**18IUH92H***		**18IUH92N***	
40	50	100	100	4	—	150	50–200	B	**18JUH92B***		**18JUH92@***		**18JUH92F***		**18JUH92H***		**18JUH92N***	
50	75	150	200	5	—	250	55–250	—	**18LPT92B***		**18LPT92E*③**		—	—	**18LPT92H***		**18LPT92N***	
75	100	200	—	5	—	400	55–250	—	**18LPU92B***		**18LPU92E*③**		—	—	—	—	**18LPU92N***	
100	125	250	300	6	—	400	160–630	—	**18MPW92B***		**18MPW92E*③**		—	—	—	—	**18MPW92N***	
150	200	400	400	6	—	600	160–630	—	**18MPX92B***		**18MPX92E*③**		—	—	—	—	**18MPX92N***	
—	250	500	500	7④	—	800	400–1220	A1+CT	**18NUV92B***		—	—	—	—	—	—	**18NUV92N***	
—	300	600	600	7④	—	1000	400–1220	A1+CT	**18NUY92B***		—	—	—	—	—	—	**18NUY92N***	
—	400	800	800	8⑤	—	1200	400–1220	A1+CT	**18PUW92B***		—	—	—	—	—	—	**18PUW92N***	
—	450	900	900	8⑤	—	1600	400–1220	A1+CT	**18PUZ92B***		—	—	—	—	—	—	**18PUZ92N***	

Note: All starter sizes carry one maximum Hp rating (per the National Electric Code).

① Dual voltage coils not available in starter sizes 5–8.

② For conduit hubs and conversion instructions, see page 17-112.

③ Enclosure is NEMA Type 4 (painted steel).

④ F coil 100-250V AC 50/60Hz, or DC, H coil 150-500V AC 50/60Hz, or DC

⑤ Only available F coil 100-250V AC 50/60Hz, or DC

Ordering Information

- Replace the (*) with a letter from the coil table. Dual voltage coils are wired on high voltage unless specified on order.
- Field Modification Kits see page 17-106.
- Factory Modifications see page 17-121.
- Dimensions see page 17-161.
- Wiring Diagrams see page 17-176.
- Replacement Parts see page 17-133.

Coil Table

60Hz Voltage	Letter
24	J
120	F
110–120/220–240	A
200–208	D
220–240	G
277	L
220–240/440–480	C
440–480	H
575–600	E

For other voltages and frequencies, see Factory Modifications page 17-121.

Extra Wide Enclosure, 3-Phase, 3-Pole

Max Hp							Overload		Enclosure					
									NEMA 1 General Purpose		NEMA 4/4X Stainless① Watertight, Dust-tight, Corrosion Resistant @ = W for 304 Stainless Steel @ = X for 316 Stainless Steel		NEMA 12, NEMA 3/3R①, NEMA 4 Painted Industrial Use Weatherproof Watertight, Dust-tight	
200 Volts	230 Volts	460 Volts	575 Volts	NEMA Size	Half Size	Motor Circuit Interruter ETI Amps	Amp Range	Frame Size	Catalog Number	List Price $	Catalog Number	List Price $	Catalog Number	List Price $
½	½	1	1	0	—	3	0.75–3.4	A	**18CUB82B***		**18CUB82@***		**18CUB82N***	
2	2	5	5	0	—	10	3–12	A1	**18CUC82B***		**18CUC82@***		**18CUC82N***	
3	3	—	—	0	—	25	5.5–22	A1	**18CUD82B***		**18CUD82@***		**18CUD82N***	
½	½	1	1	1	—	3	0.75–3.4	A	**18DUB82B***		**18DUB82@***		**18DUB82N***	
2	2	5	5	1	—	10	3–12	A1	**18DUC82B***		**18DUC82@***		**18DUC82N***	
3	3	7½	10	1	—	25	5.5–22	A1	**18DUD82B***		**18DUD82@***		**18DUD82N***	
7½	7½	10	—	1	—	30	10–40	A1	**18DUE82B***		**18DUE82@***		**18DUE82N***	
—	—	15	15	—	1¾	40	10–40	A1	**18EUE82B***		**18EUE82@***		**18EUE82N***	
10	15	25	25	2	—	50	13–52	B	**18FUF82B***		**18FUF82@***		**18FUF82N***	
15	20	30	30	—	2½	100	25–100	B	**18GUG82B***		**18GUG82@***		**18GUG82N***	
25	30	50	50	3	—	125	25–100	B	**18HUG82B***		**18HUG82@***		**18HUG82N***	

Note: All starter sizes carry one maximum Hp rating (per the National Electric Code).

① For conduit hubs and conversion instructions, see page 17-112.

Ordering Information

- Replace the (*) with a letter from the coil table. Dual voltage coils are wired on high voltage unless specified on order.
- Heater elements see page 17-126. (3 required)
- Field Modification Kits see page 17-106.
- Factory Modifications see page 17-121.
- Dimensions see page 17-161.
- Wiring Diagrams see page 17-176.
- Replacement Parts see page 17-133.
- For NO/NC SPDT contact on overload relay, replace "81" with "91". "81" indicates one NC contact.

Coil Table

60Hz Voltage	Letter
24	J
120	F
110–120/220–240	A
200–208	D
220–240	G
277	L
220–240/440–480	C
440–480	H
575–600	E

For other voltages and frequencies, see Factory Modifications page 17-121.

Standard Width Enclosure, 3-Phase, 3-Pole

Max Hp							Enclosure									
							NEMA 1 General Purpose Watertight, Dust-tight		NEMA 4/4X Stainless① Watertight, Dust-tight Corrosion Resistant @ = W for 304 Stainless Steel @ = X for 316 Stainless Steel		NEMA 4X Fiberglass NEMA 3 & 4 Corrosion Resistant Class I Groups C & D Class II Groups E, F & G		NEMA 7 & 9 Div 1 and Div 2 Weatherproof Watertight, Dust-tight Class III Bolted Enclosures Indoor/Outdoor Use		NEMA 12,NEMA 3/3R,① NEMA 4 Painted Industrial Use	
200 Volts	230 Volts	460 Volts	575 Volts	NEMA Size	Half Size	Motor Circuit Interrupter ETI Amps	Catalog Number	List Price $	Catalog Number	List Price $	Catalog Number	List Price $	Catalog Number	List Price $	Catalog Number	List Price $
½	½	1	1	0	—	3	18CP92BA*81		18CP92@A*81		18CP92FA*81		18CP92HA*81		18CP92NA*81	
1	1	3	3	0	—	10	18CP92BB*81		18CP92@B*81		18CP92FB*81		18CP92HB*81		18CP92NB*81	
3	3	5	5	0	—	25	18CP92BC*81		18CP92@C*81		18CP92FC*81		18CP92HC*81		18CP92NC*81	
½	½	1	1	1	—	3	18DP92BA*81		18DP92@A*81		18DP92FA*81		18DP92HA*81		18DP92NA*81	
1	1	3	3	1	—	10	18DP92BB*81		18DP92@B*81		18DP92FB*81		18DP92HB*81		18DP92NB*81	
3	3	7½	7½	1	—	25	18DP92BD*81		18DP92@D*81		18DP92FD*81		18DP92HD*81		18DP92ND*81	
7½	7½	10	10	1	—	30	18DP92BE*81		18DP92@E*81		18DP92FE*81		18DP92HE*81		18DP92NE*81	
—	—	15	15	—	1¾	40	18EP92BF*81		18EP92@F*81		18EP92FF*81		18EP92HF*81		18EP92NF*81	
10	10	—	—	—	1¾	50	18EP92BG*81		18EP92@G*81		18EP92FG*81		18EP92HG*81		18EP92NG*81	
—	—	20	20	2	—	40	18FP92BH*81		18FP92@H*81		18FP92FH*81		18FP92HH*81		18FP92NH*81	
10	15	25	25	2	—	50	18FP92BJ*81		18FP92@J*81		18FP92FJ*81		18FP92HJ*81		18FP92NJ*81	
10	15	30	30	—	2½	50	18GP92BK*81		18GP92@K*81		18GP92FK*81		18GP92HK*81		18GP92NK*81	
15	20	—	—	—	2½	100	18GP92BL*81		18GP92@L*81		18GP92FL*81		18GP92HL*81		18GP92NL*81	
—	—	30	30	3	—	50	18HP92BM*81		18HP92@M*81		18HP92FM*81		18HP92HM*81		18HP92NM*81	
25	30	50	50	3	—	125	18HP92BN*81		18HP92@N*81		18HP92FN*81		18HP92HN*81		18HP92NN*81	
30	40	75	75	—	3½	125	18IP92BP*81		18IP92@P*81		18IP92FP*81		18IP92HP*81		18IP92NP*81	
40	50	100	100	4	—	150	18JP92BR*81		18JP92@R*81		18JP92FR*81		18JP92HR*81		18JP92NR*81	

Extra Wide Enclosure, 3-Phase, 3-Pole

Max Hp							Enclosure					
							NEMA 1 General Purpose		NEMA 4/4X Stainless① Watertight, Dust-tight Corrosion Resistant @=W for 304 Stainless Steel @=X for 316 Stainless Steel		NEMA 12, NEMA 3/3R,① NEMA 4 Painted Industrial Use Weatherproof Watertight, Dust-tight	
200 Volts	230 Volts	460 Volts	575 Volts	NEMA Size	Half Size	Motor Circuit Interrupter ETI Amps	Catalog Number	List Price $	Catalog Number	List Price $	Catalog Number	List Price $
½	½	1	1	0	—	3	18CP82BA*81		18CP82@A*81		18CP82NA*81	
1	1	3	3	0	—	10	18CP82BB*81		18CP82@B*81		18CP82NB*81	
3	3	5	5	0	—	25	18CP82BC*81		18CP82@C*81		18CP82NC*81	
½	½	1	1	1	—	3	18DP82BA*81		18DP82@A*81		18DP82NA*81	
1	1	3	3	1	—	10	18DP82BB*81		18DP82@B*81		18DP82NB*81	
3	3	7½	7½	1	—	25	18DP82BD*81		18DP82@D*81		18DP82ND*81	
7½	7½	10	10	1	—	30	18DP82BE*81		18DP82@E*81		18DP82NE*81	
—	—	15	15	—	1¾	40	18EP82BF*81		18EP82@F*81		18EP82NF*81	
10	10	—	—	—	1¾	50	18EP82BG*81		18EP82@G*81		18EP82NG*81	
—	—	20	20	2	—	40	18FP82BH*81		18FP82@H*81		18FP82NH*81	
10	15	25	25	2	—	50	18FP82BJ*81		18FP82@J*81		18FP82NJ*81	
10	15	30	30	—	2½	50	18GP82BK*81		18GP82@K*81		18GP82NK*81	
15	20	—	—	—	2½	100	18GP82BL*81		18GP82@L*81		18GP82NL*81	
—	—	30	30	3	—	50	18HP82BM*81		18HP82@M*81		18HP82NM*81	
25	30	50	50	3	—	125	18HP82BN*81		18HP82@N*81		18HP82NN*81	

Note: Hp's shown above are based on the overload amp range for the FLA's (per the National Electric Code) of typical industrial motors. All starter sizes carry one maximum Hp rating.

① For conduit hubs and conversion instructions, see page 17-112.

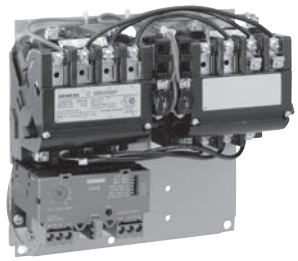

Ordering Information

- Replace the (*) with a letter from the coil table. Dual voltage coils are wired on high voltage unless specified on order.
- Field Modification Kits see page 17-106.
- Factory Modifications see page 17-121.
- Dimensions see page 17-144 open and 17-164 enclosed.
- Wiring Diagrams see page 17-178.

Coil Table

60Hz Voltage	Letter
24	J
120	F
110–120/220–240①	A
200–208	D
220–240	G
277	L
220–240/440–480①	C
440–480	H
575–600	E

For other voltages and frequencies, see Factory Modifications page 17-121.

Open Type & Standard Width Enclosure, 3-Phase, 3-Pole

Max Hp						Overload		Enclosure											
								Open Type Standard Auxiliary Contacts⑥		**NEMA 1** General Purpose		**NEMA 4/4X Stainless**② Watertight, Dust-tight, Corrosion Resistant 304 Stainless Steel		**NEMA 4X Fiberglass** Watertight, Dust-tight Corrosion Resistant		**NEMA 7 & 9 NEMA 3 & 4** Div. 1 and Div. 2 Class I Groups C & D Class II Groups E, F & G Class III Bolted Enclosures Indoor/ Outdoor Use		**NEMA 12 NEMA 3/3R**② Industrial Use Weatherproof (Field Convertible to 3/3R)	
200 Volts	**230 Volts**	**460 Volts**	**575 Volts**	**NEMA Size**	**Half Size**	**Amp Range**	**Frame Size**	**Catalog Number**	**List Price $**	**Catalog Number**	**List Price $**	**Catalog Number**	**List Price $**	**Catalog Number**	**List Price $**	**Catalog Number**	**List Price $**	**Catalog Number**	**List Price $**
⅛	⅛	⅓	½	00	—	0.25–1	A	**22BUA32A***		**22BUA32B***		**Use Size 0**	—	**Use Size 0**	—	**Use Size 0**	—	**Use Size 0**	—
½	¾	1½	2	00	—	0.75–3.4	A	**22BUB32A***		**22BUB32B***		**Use Size 0**	—	**Use Size 0**	—	**Use Size 0**	—	**Use Size 0**	—
1½	1½	2	—	00	—	3–12	A1	**22BUC32A***		**22BUC32B***		**Use Size 0**	—	**Use Size 0**	—	**Use Size 0**	—	**Use Size 0**	—
⅛	⅛	⅓	1/2	0	—	0.25–1	A	**22CUA32A***		**22CUA32B***		**22CUA32W***		**22CUA32F***		**22CUA32H***		**22CUA320***	
½	¾	1½	2	0	—	0.75–3.4	A	**22CUB32A***		**22CUB32B***		**22CUB32W***		**22CUB32F***		**22CUB32H***		**22CUB320***	
2	2	5	5	0	—	3–12	A1	**22CUC32A***		**22CUC32B***		**22CUC32W***		**22CUC32F***		**22CUC32H***		**22CUC320***	
3	3	—	—	0	—	5.5–22	A1	**22CUD32A***		**22CUD32B***		**22CUD32W***		**22CUD32F***		**22CUD32H***		**22CUD320***	
⅛	⅛	⅓	½	1	—	0.25–1	A	**22DUA32A***		**22DUA32B***		**22DUA32W***		**22DUA32F***		**22DUA32H***		**22DUA320***	
½	¾	1½	2	1	—	0.75–3.4	A	**22DUB32A***		**22DUB32B***		**22DUB32W***		**22DUB32F***		**22DUB32H***		**22DUB320***	
2	2	5	5	1	—	3–12	A1	**22DUC32A***		**22DUC32B***		**22DUC32W***		**22DUC32F***		**22DUC32H***		**22DUC320***	
3	3	10	10	1	—	5.5–22	A1	**22DUD32A***		**22DUD32B***		**22DUD32W***		**22DUD32F***		**22DUD32H***		**22DUD320***	
7½	7½	—	—	1	—	10–40	A1	**22DUE32A***		**22DUE32B***		**22DUE32W***		**22DUE32F***		**22DUE32H***		**22DUE320***	
10	10	15	15	—	1¾	10–40	A1	**22EUE32A***		**22EUE32B***		**22EUE32W***		**22EUE32F***		**22EUE32H***		**22EUE320***	
10	15	25	25	2	—	13–52	B	**22FUF32A***		**22FUF32B***		**22FUF32W***		**22FUF32F***		**22FUF32H***		**22FUF320***	
15	20	30	30	—	2½	25–100	B	**22GUG32A***		**22GUG32B***		**22GUG32W***		**22GUG32F***		**22GUG32H***		**22GUG320***	
25	30	50	50	3	—	25–100	B	**22HUG32A***		**22HUG32B***		**22HUG32W***		**22HUG32F***		**22HUG32H***		**22HUG320***	
30	40	75	75	—	3½	50–200	B	**22IUH32A***		**22IUH32B***		**22IUH32W***		**22IUH32F***		**22IUH32H***		**22IUH320***	
40	50	100	100	4	—	50–200	B	**22JUH32A***		**22JUH32B***		**22JUH32W***		**22JUH32F***		**22JUH32H***		**22JUH320***	
75	100	200	200	5	—	55–250	—	**22LPU32A***		**22LPU32B***		**22LPU32E***③		—	—	—	—	**22LPU320***	
150	200	400	400	6	—	160–630	—	**22MPX32A***		**22MPX32B***		**22MPX32E***③		—	—	—	—	**22MPX320***	
—	300	600	600	7④	—	400–1220	A1+CT	**22NUN32A***		**22NUN32B***		—	—	—	—	—	—	**22NUN320***	
—	450	900	900	8⑤	—	400–1220	A1+CT	**22PUN32A***		**22PUN32B***		—	—	—	—	—	—	**22PUN320***	

Note: All starter sizes carry one maximum Hp rating (per the National Electric Code).

① Dual voltage coils not available in size 5–8 starters.

② For conduit hubs and conversion instructions, see page 17-112.

③ Enclosure is rated only NEMA 4 (painted steel).

④ Only available
F coil 100-250V AC 50/60Hz, or DC
H coil 150-500V AC 50/60Hz, or DC

⑤ Only available
F coil 100-250V AC 50/60Hz, or DC

⑥ Auxiliary contacts
22B-22E 4th pole built-in
22F-22J 2 NO & 2 NC

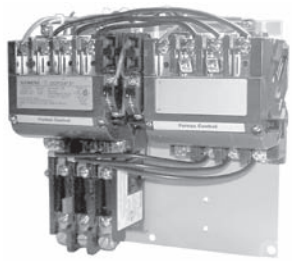

Ordering Information

- Replace the (*) with a letter from the coil table. Dual voltage coils are wired on high voltage unless specified on order.
- Heater elements see page 17-126. Single phase starters require 1 heater element. 3-phase starters require 3 heater elements.
- Field Modification Kits see page 17-106.
- Factory Modifications see page 17-121.
- Dimensions see pages 17-144 open and 17-164 enclosed.
- Wiring Diagrams see page 17-177.
- Replacement Parts see page 17-133.
- For NO/NC SPDT contact on overload relay, replace "81" with "91". "81" indicates one NC contact.

Coil Table

60Hz Voltage	Letter
24	J
120	F
110–120/220–240	A
200–208	D
220–240	G
277	L
220–240/440–480	C
440–480	H
575–600	E

For other voltages and frequencies, see Factory Modifications page 17-121.

Open Type & Standard Width Enclosure, 3-Phase, 3-Pole

Max Hp							Enclosure											
							Open Type③		NEMA 1 General Purpose		NEMA 4/4X Stainless① Watertight, Dust-tight Corrosion Resistant 304 Stainless Steel		NEMA 4X Fiberglass Watertight, Dust-tight Corrosion Resistant Indoor/Outdoor Use		NEMA 7 & 9 NEMA 3 & 4 Div 1 and Div 2 Class I Groups C & D Class II Groups E, F & G Class III Bolted Enclosures		NEMA 12① NEMA 3/3R Industrial Use Weatherproof	
200 Volts	230 Volts	460 Volts	575 Volts	Contactor Amp Rating	NEMA Size	Half Size	Catalog Number	List Price $	Catalog Number	List Price $	Catalog Number	List Price $	Catalog Number	List Price $	Catalog Number	List Price $	Catalog Number	List Price $
1½	1½	2	2	9	00	—	**22BP32A*81**		**22BP32B*81**		Use Size 0	—	Use Size 0	—	Use Size 0	—	Use Size 0	—
3	3	5	5	18	0	—	**22CP32A*81**		**22CP32B*81**		**22CP32W*81**		**22CP32F*81**		**22CP32H*81**		**22CP320*81**	
7½	7½	10	10	27	1	—	**22DP32A*81**		**22DP32B*81**		**22DP32W*81**		**22DP32F*81**		**22DP32H*81**		**22DP320*81**	
10	10	15	15	40	—	1¾	**22EP32A*81**		**22EP32B*81**		**22EP32W*81**		**22EP32F*81**		**22EP32H*81**		**22EP320*81**	
10	15	25	25	45	2	—	**22FP32A*81**		**22FP32B*81**		**22FP32W*81**		**22FP32F*81**		**22FP32H*81**		**22FP320*81**	
15	20	30	30	60	—	2½	**22GP32A*81**		**22GP32B*81**		**22GP32W*81**		**22GP32F*81**		**22GP32H*81**		**22GP320*81**	
25	30	50	50	90	3	—	**22HP32A*81**		**22HP32B*81**		**22HP32W*81**		**22HP32F*81**		**22HP32H*81**		**22HP320*81**	
30	40	75	75	115	—	3½	**22IP32A*81**		**22IP32B*81**		**22IP32W*81**		**22IP32F*81**		**22IP32H*81**		**22IP320*81**	
40	50	100	100	135	4	—	**22JG32A*81**		**22JG32B*81**		**22JG32W*81**		**22JG32F*81**		**22JG32H*81**		**22JG320*81**	

Open Type & Standard Width Enclosure, Single Phase, 3-Wire, 2-Pole②

Max Hp				Enclosure											
				Open Type		NEMA 1 General Purpose		NEMA 4/4X Stainless① Watertight, Dust-tight Corrosion Resistant 304 Stainless Steel		NEMA 4X Fiberglass Watertight, Dust-tight Corrosion Resistant		NEMA 7 & 9 NEMA 3 & 4 Div 1 and Div 2 Class I Groups C & D Class II Groups E, F & G Class III Bolted Enclosures Indoor/Outdoor Use		NEMA 12① NEMA 3/3R Industrial Use Weatherproof	
115 Volts	208/230 Volts	Contactor Amp Rating	NEMA Size	Catalog Number	List Price $	Catalog Number	List Price $	Catalog Number	List Price $	Catalog Number	List Price $	Catalog Number	List Price $	Catalog Number	List Price $
⅓	1	9	00	**22BP12A*81**		**22BP12B*81**		Use Size 0	—	Use Size 0	—	Use Size 0	—	Use Size 0	—
1	2	18	0	**22CP12A*81**		**22CP12B*81**		**22CP12W*81**		**22CP12F*81**		**22CP12H*81**		**22CP120*81**	
2	3	27	1	**22DP12A*81**		**22DP12B*81**		**22DP12W*81**		**22DP12F*81**		**22DP12H*81**		**22DP120*81**	
3	5	35	1P	**22EP12A*81**		**22EP12B*81**		**22EP12W*81**		**22EP12F*81**		**22EP12H*81**		**22EP120*81**	

Note: Hp's shown above are based on the overload amp range for the FLA's (per the National Electric Code) of typical industrial motors. All Starter Sizes carry one maximum Hp rating.

① For conduit hubs and conversion instructions, see page 17-112.
② Coil D, F, or G will be wired for Incoming Voltage. J coil will be wired for 24V separate source. Coils E, H, and L do not apply to single phase starters.
③ Auxiliary contacts 22B-22E 4th pole built-in 22F-22J 2 NO & 2 NC

Combination Reversing Heavy Duty Starters

Ordering Information

- Replace the (*) with a letter from the coil table. Dual voltage coils are wired on high voltage unless specified on order.
- Heater elements see page 17-126.
- Fuse clips see page 17-122.
- Field Modification Kits see page 17-106.
- Factory Modifications see page 17-121.
- Dimensions see page 17-166.
- Wiring Diagrams see page 17-179.
- Replacement Parts see page 17-133.
- For NO/NC SPDT contact on overload, replace "81" with "91". "81" indicates one NC contact.

Coil Table

60Hz Voltage	Letter
24	J
120	F
110–120/220–240①	A
200–208	D
220–240	G
277	L
220–240/440–480①	C
440–480	H
575–600	E

For other voltages and frequencies, see Factory Modifications page 17-121.

Standard Width Enclosure with Solid State Overload, 3-Phase, 3-Pole

Max Hp						Overload			Enclosure							
									NEMA 1 General Purpose		NEMA 4/4X Stainless② Watertight, Dust-tight, Corrosion Resistant 304 Stainless Steel		NEMA 4X Fiberglass Watertight, Dust-tight Corrosion Resistant		NEMA 12, NEMA 3/3R②, NEMA 4 Painted (thru size 4) Industrial Use Weatherproof Watertight, Dust-tight	
200 Volts	230 Volts	460 Volts	575 Volts	NEMA Size	Half Size	Amp Range	Frame Size	Disc. Amp Rating	Catalog Number	List Price $	Catalog Number	List Price $	Catalog Number	List Price $	Catalog Number	List Price $
⅛	⅛	⅓	½	0	—	0.25–1	A	30	**25CUA92B***		**25CUA92W***		**25CUA92F***		**25CUA92N***	
½	¾	1½	2	0	—	0.75–3.4	A	30	**25CUB92B***		**25CUB92W***		**25CUB92F***		**25CUB92N***	
2	2	5	5	0	—	3–12	A1	30	**25CUC92B***		**25CUC92W***		**25CUC92F***		**25CUC92N***	
3	3	—	—	0	—	5.5–22	A1	30	**25CUD92B***		**25CUD92W***		**25CUD92F***		**25CUD92N***	
⅛	⅛	⅓	½	1	—	0.25–1	A	30	**25DUA92B***		**25DUA92W***		**25DUA92F***		**25DUA92N***	
½	¾	1½	2	1	—	0.75–3.4	A	30	**25DUB92B***		**25DUB92W***		**25DUB92F***		**25DUB92N***	
2	2	5	5	1	—	3–12	A1	30	**25DUC92B***		**25DUC92W***		**25DUC92F***		**25DUC92N***	
3	3	10	10	1	—	5.5–22	A1	30	**25DUD92B***		**25DUD92W***		**25DUD92F***		**25DUD92N***	
7½	7½	—	—	1	—	10–40	A1	60	**25DUE92B***		**25DUE92W***		**25DUE92F***		**25DUE92N***	
10	10	15	15	—	1¾	10–40	A1	60	**25EUE92B***		**25EUE92W***		**25EUE92F***		**25EUE92N***	
10	15	25	25	2	—	13–52	B	60	**25FUF92B***		**25FUF92W***		**25FUF92F***		**25FUF92N***	
15	20	30	30	—	2½	25–100	B	100	**25GUG92B***		**25GUG92W***		**25GUG92F***		**25GUG92N***	
20	25	50	50	3	—	25–100	B	100	**25HUG92B***		**25HUG92W***		**25HUG92F***		**25HUG92N***	
30	40	75	75	—	3½	50–200	B	200	**25IUH92B***		**25IUH92W***		**25IUH92F***		**25IUH92N***	
40	50	100	100	4	—	50–200	B	200	**25JUH92B***		**25JUH92W***		**25JUH92F***		**25JUH92N***	
75	100	200	200	5	—	55–250	—	400	**25LPU92B***		**25LPU92E***③		—	—	**25LPU92N***	
150	200	400	400	6	—	160–630	—	600	**25MPX92B***		**25MPX92E***③		—	—	**25MPX92N***	
—	300	600	600	7④	—	400–1220	A1+CT	1200	**25NUN92B***		—	—	—	—	**25NUN92N***	
—	450	900	900	8⑤	—	400–1220	A1+CT	1600	**25PUN92B***		—	—	—	—	**25PUN92N***	

Standard Width Enclosure with Ambient Compensated Bimetal Overload, 3-Phase, 3-Pole

Max Hp							Enclosure							
							NEMA 1 General Purpose		NEMA 4/4X Stainless② Watertight, Dust-tight Corrosion Resistant 304 Stainless Steel		NEMA 4X Fiberglass Watertight, Dust-tight Corrosion Resistant		NEMA 12② NEMA 3/3R NEMA 4 Painted Industrial Use Weatherproof Watertight, Dust-tight	
200 Volts	230 Volts	460 Volts	575 Volts	NEMA Size	Half Size	Disc Amp Rating	Catalog Number	List Price $	Catalog Number	List Price $	Catalog Number	List Price $	Catalog Number	List Price $
3	3	5	5	0	—	30	**25CP92B*81**		**25CP92W*81**		**25CP92F*81**		**25CP92N*81**	
7½	7½	10	10	1	—	30	**25DP92B*81**		**25DP92W*81**		**25DP92F*81**		**25DP92N*81**	
10	10	15	15	—	1¾	60	**25EP92B*81**		**25EP92W*81**		**25EP92F*81**		**25EP92N*81**	
10	15	25	25	2	—	60	**25FP92B*81**		**25FP92W*81**		**25FP92F*81**		**25FP92N*81**	
15	20	30	30	—	2½	100	**25GP92B*81**		**25GP92W*81**		**25GP92F*81**		**25GP92N*81**	
25	30	50	50	3	—	100	**25HP92B*81**		**25HP92W*81**		**25HP92F*81**		**25HP92N*81**	
30	40	75	75	—	3½	200	**25IP92B*81**		**25IP92W*81**		**25IP92F*81**		**25IP92N*81**	
40	50	100	100	4	—	200	**25JP92B*81**		**25JP92W*81**		**25JP92F*81**		**25JP92N*81**	

Note: All starter sizes carry one maximum Hp rating (per the National Electric Code).

① Dual voltage coils not available in starter sizes 5–8.

② For conduit hubs and conversion instructions, see page 17-112.

③ Enclosure is NEMA Type 4 (painted steel).

④ F coil 100-250V AC 50/60Hz, or DC, H coil 150-500V AC 50/60Hz, or DC

⑤ Only available F coil 100-250V AC 50/60Hz, or DC

Ordering Information

- Replace the (*) with a letter from the coil table. Dual voltage coils are wired on high voltage unless specified on order.
- Field Modification Kits see page 17-106.
- Factory Modifications see page 17-121.
- Dimensions see page 17-166.
- Wiring Diagrams see page 17-179.
- Replacement Parts see page 17-133.
- For NO/NC SPDT contact on overload relay, replace "81" with "91". "81" indicates one NC contact.

Coil Table

60Hz Voltage	Letter
24	J
120	F
110–120/220–240①	A
200–208	D
220–240	G
277	L
220–240/440–480①	C
440–480	H
575–600	E

For other voltages and frequencies, see Factory Modifications page 17-121.

Standard Width Enclosure with Solid State Overload, 3-Phase, 3-Pole

Max Hp							Overload		Enclosure									
									NEMA 1 General Purpose		**NEMA 4/4X Stainless②** Watertight, Dust-tight, Corrosion Resistant 304 Stainless Steel		**NEMA 4X Fiberglass** Watertight, Dust-tight Corrosion Resistant		**NEMA 7 & 9 NEMA 3 & 4** Div. 1 and Div. 2 Class I Groups C & D Class II Groups E, F & G Class III Bolted Enclosures Indoor/Outdoor Use		**NEMA 12, NEMA 3/3R②, NEMA 4 Painted (thru size 4)** Industrial Use Weatherproof Watertight, Dust-tight	
200 Volts	230 Volts	460 Volts	575 Volts	NEMA Size	Half Size	Motor Circuit Interruter ETI Amps	Amp Range	Frame Size	Catalog Number	List Price $	Catalog Number	List Price $	Catalog Number	List Price $	Catalog Number	List Price $	Catalog Number	List Price $
½	½	1	1	0	—	3	0.75–3.4	A	**26CUB92B***		**26CUB92W***		**26CUB92F***		**26CUB92H***		**26CUB92N***	
2	2	5	5	0	—	10	3–12	A1	**26CUC92B***		**26CUC92W***		**26CUC92F***		**26CUC92H***		**26CUC92N***	
3	3	—	—	0	—	25	5.5–22	A1	**26CUD92B***		**26CUD92W***		**26CUD92F***		**26CUD92H***		**26CUD92N***	
½	½	1	1	1	—	3	0.75–3.4	A	**26DUB92B***		**26DUB92W***		**26DUB92F***		**26DUB92H***		**26DUB92N***	
2	2	5	5	1	—	10	3–12	A1	**26DUC92B***		**26DUC92W***		**26DUC92F***		**26DUC92H***		**26DUC92N***	
3	3	7½	10	1	—	25	5.5–22	A1	**26DUD92B***		**26DUD92W***		**26DUD92F***		**26DUD92H***		**26DUD92N***	
7½	7½	10	—	1	—	30	10–40	A1	**26DUE92B***		**26DUE92W***		**26DUE92F***		**26DUE92H***		**26DUE92N***	
—	—	15	15	—	1¾	40	10–40	A1	**26EUE92B***		**26EUE92W***		**26EUE92F***		**26EUE92H***		**26EUE92N***	
10	15	25	25	2	—	50	13–52	B	**26FUF92B***		**26FUF92W***		**26FUF92F***		**26FUF92H***		**26FUF92N***	
15	20	30	30	—	2½	100	25–100	B	**26GUG92B***		**26GUG92W***		**26GUG92F***		**26GUG92H***		**26GUG92N***	
25	30	50	50	3	—	125	25–100	B	**26HUG92B***		**26HUG92W***		**26HUG92F***		**26HUG92H***		**26HUG92N***	
30	40	75	75	—	3½	125	50–200	B	**26IUH92B***		**26IUH92W***		**26IUH92F***		**26IUH92H***		**26IUH92N***	
40	50	100	100	4	—	150	50–200	B	**26JUH92B***		**26JUH92W***		**26JUH92F***		**26JUH92H***		**26JUH92N***	
50	75	150	200	5	—	250	55–250	—	**26LPT92B***		**26LPT92E*③**		—	—	—	—	**26LPT92N***	
75	100	200	—	5	—	400	55–250	—	**26LPU92B***		**26LPU92E*③**		—	—	—	—	**26LPU92N***	
100	125	250	300	6	—	400	160–630	—	**26MPW92B***		**26MPW92E*③**		—	—	—	—	**26MPW92N***	
150	200	400	400	6	—	600	160–630	—	**26MPX92B***		**26MPX92E*③**		—	—	—	—	**26MPX92N***	
—	250	500	500	7*④	—	800	400–1220	A1+CT	**26NUV92B***		—	—	—	—	—	—	**26NUV92N***	
—	300	600	600	7*④	—	1000	400–1220	A1+CT	**26NUY92B***		—	—	—	—	—	—	**26NUY92N***	
—	400	800	800	8⑤	—	1200	400–1220	A1+CT	**26PUW92B***		—	—	—	—	—	—	**26PUW92N***	
—	450	900	900	8⑤	—	1600	400–1220	A1+CT	**26PUZ92B***		—	—	—	—	—	—	**26PUZ92N***	

Standard Width Enclosure with Ambient Compensated Bimetal Overload, 3-Phase, 3-Pole

½	½	1	1	0	—	3			**26CP92BA*81**		**26CP92WA*81**		**26CP92FA*81**		**26CP92HA*81**		**26CP92NA*81**	
1	1	3	3	0	—	10			**26CP92BB*81**		**26CP92WB*81**		**26CP92FB*81**		**26CP92HB*81**		**26CP92NB*81**	
3	3	5	5	0	—	25			**26CP92BC*81**		**26CP92WC*81**		**26CP92FC*81**		**26CP92HC*81**		**26CP92NC*81**	
½	½	1	1	1	—	3			**26DP92BA*81**		**26DP92WA*81**		**26DP92FA*81**		**26DP92HA*81**		**26DP92NA*81**	
1	1	3	3	1	—	10			**26DP92BB*81**		**26DP92WB*81**		**26DP92FB*81**		**26DP92HB*81**		**26DP92NB*81**	
3	3	7½	7½	1	—	25			**26DP92BD*81**		**26DP92WD*81**		**26DP92FD*81**		**26DP92HD*81**		**26DP92ND*81**	
7½	7½	10	10	1	—	30			**26DP92BE*81**		**26DP92WE*81**		**26DP92FE*81**		**26DP92HE*81**		**26DP92NE*81**	
—	—	15	15	—	1¾	40			**26EP92BF*81**		**26EP92WF*81**		**26EP92FF*81**		**26EP92HF*81**		**26EP92NF*81**	
10	10	—	—	—	1¾	50			**26EP92BG*81**		**26EP92WG*81**		**26EP92FG*81**		**26EP92HG*81**		**26EP92NG*81**	
—	—	20	20	2	—	40			**26FP92BH*81**		**26FP92WH*81**		**26FP92FH*81**		**26FP92HH*81**		**26FP92NH*81**	
10	15	25	25	2	—	50			**26FP92BJ*81**		**26FP92WJ*81**		**26FP92FJ*81**		**26FP92HJ*81**		**26FP92NJ*81**	
10	15	30	30	—	2½	50			**26GP92BK*81**		**26GP92WK*81**		**26GP92FK*81**		**26GP92HK*81**		**26GP92NK*81**	
15	20	—	—	—	2½	100			**26GP92BL*81**		**26GP92WL*81**		**26GP92FL*81**		**26GP92HL*81**		**26GP92NL*81**	
—	—	30	30	3	—	50			**26HP92BM*81**		**26HP92WM*81**		**26HP92FM*81**		**26HP92HM*81**		**26HP92NM*81**	
25	30	50	50	3	—	125			**26HP92BN*81**		**26HP92WN*81**		**26HP92FN*81**		**26HP92HN*81**		**26HP92NN*81**	
30	40	75	75	—	3½	125			**26IP92BP*81**		**26IP92WP*81**		**26IP92FP*81**		**26IP92HP*81**		**26IP92NP*81**	
40	50	100	100	4	—	150			**26JP92BR*81**		**26JP92WR*81**		**26JP92FR*81**		**26JP92HR*81**		**26JP92NR*81**	

Note: All starter sizes carry one maximum Hp rating (per the National Electric Code).

① Dual voltage coils not available in starter sizes 5–8.

② For conduit hubs and conversion instructions, see page 17-112.

③ Enclosure is NEMA Type 4 (painted steel).

④ F coil 100-250V AC 50/60Hz, or DC, H coil 150-500V AC 50/60Hz, or DC

⑤ Only available F coil 100-250V AC 50/60Hz, or DC

Features

- Rugged Industrial Design
- Dual Voltage, Dual Frequency Coils
- Compact Design
- Snap-On Front Removable Auxiliary Contacts
- Electrical and Mechanical Interlocks
- Half Sizes — Space and Cost Savings
- Industrial Type Disconnect Operating Handle
- Visible Blade Disconnect Thru Size 4
- Adjustable Motor Circuit Protector
- 100,000 Amp Fault Protection with MCP or Class R Fuses
- Pilot Device Locations identified on All Enclosures
- UL Listed File #E14900
- CSA Certified File #LR6535

Applications

Multi-speed magnetic starters automatically reconnect multi-speed motor windings for the desired speed in response to a signal received from push button stations or other pilot devices.

These starters are available for two speed motors.

Consequent Pole multi-speed motors having two speeds on a single winding (consequent pole) require a starter which reconnects the motor leads to half the number of effective motor poles at the high speed point. In this type of motor, **the low speed is one half the high speed.**

Separate Windings motors having separate windings for each speed provide more varied speed combinations in that the low speed need not be one half the high speed. **Starters for separate winding motors consist of a starter unit for each speed.**

Multi-speed motor starters are available for constant torque, variable torque and constant horsepower motors.

Constant Torque motors maintain constant torque at all speeds. Horsepower varies directly with speed. This type of motor is applicable to conveyors, mills and similar applications.

Variable Torque motors produce a torque characteristic which varies as the square of the speed. This type of motor is applicable to fans, blowers and centrifugal pumps.

Constant Horsepower motors maintain constant horsepower at all speeds and therefore torque varies inversely with speed. This type of motor is applicable where the same horsepower is required at all speeds. **The higher current required at low speed requires derating on starters for constant horsepower applications.** This type of motor is applicable to metal working machines such as drills, lathes, mills, bending machines, punch presses, and power wrenches.

Operation

Magnetic starters for multi-speed applications select the desired speed in accordance with the pilot control.

The shock to machinery upon the reduction of speed is greater than when the speed is increased. Therefore, the pilot control should be wired so that the stop button must be depressed before dropping to a lower speed or time delays should be used for applications requiring full automatic operations. The multi-speed controls are available with the necessary interlocks or relays to provide this type of operation.

These controls may be modified for compelling or acceleration pilot control.

Selective Control permits the operator to start the motor at any speed and to change to a higher speed by merely pushing a button. To change to a lower speed it is necessary to first depress the stop button and to then press the proper speed button. Selective control is a function of the pilot control selected and requires no starter modifications.

Compelling Control requires that the motor always be started at the lower speed and that the push buttons be operated in speed sequence to go to the next higher speed. To change to a lower speed, the stop button must be depressed and then the push buttons operated in speed sequence until the desired speed is reached. Compelling control can be added from the factory modification section page 17-124.

Acceleration Control provides that the motor be accelerated automatically with timers by progressively energizing the controls from the push button station from the lowest to highest speed. To change to a lower speed the stop button is depressed and then it is necessary to proceed as if starting from rest. Acceleration control can be added from the factory modification section page 17-124.

Deceleration Control provides that the motor be decelerated automatically with a timer when going from high speed to low speed. The timer allows the motor to decelerate from high speed to a lower speed before automatically restarting the motor in low speed. Deceleration control can be added from the factory modification section page 17-124.

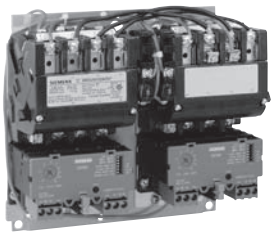

Open Style Two Speed Starter (ESP100 Overload)

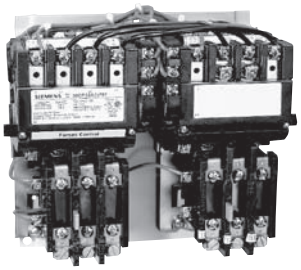

Open Style Two Speed Starter (Ambient Compensated Overload)

Two Speed Heavy Duty Starters

Constant or Variable Torque with Solid State Overload, Class 30

Selection

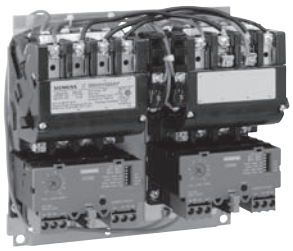

2S2W Starter
(ESP200 Overload)

Ordering Information

- Replace the (*) with a letter from the coil table. Dual voltage coils are wired on high voltage unless specified on order.
- Replace the (†) with the letter that corresponds to the correct low speed FLA in the FLA table.②
- Field Modification Kits see page 17-106.
- Factory Modifications see page 17-121.
- Dimensions see page 17-152.
- Wiring Diagrams see page 17-180.
- Replacement Parts see page 17-133.

Coil Table

60Hz Voltage	Letter
24	J
120	F
110–120/220–240	A
200–208	D
220–240	G
277	L
220–240/440–480	C
440–480	H
575–600	E

For other voltages and frequencies, see Factory Modifications page 17-121.

Low Speed FLA Table

Size	FLA	OLR Frame Size	†
0,1	0.25–1	A	A
0,1	0.75–3.4	A	B
0,1	3–12	A1	C
0,1	5.5–22	A1	D
0-1 3/4	10–40	A1	E
2-3	13–52	B	F
2-3	25–100	B	G
3 1/2-4	50–200	B	H

One Winding Consequent Pole, 3-Phase (Constant or Variable Torque)

Max Hp						Overload		Enclosure									
								Open Type Standard Auxiliary Contacts③		NEMA 1 General Purpose		NEMA 4/4X Stainless① Watertight, Dust-tight, Corrosion Resistant 304 Stainless Steel		NEMA 4X Fiberglass Watertight, Dust-tight Corrosion Resistant		NEMA 12 NEMA 3/3R① Industrial Use Weatherproof (Field Convertible to 3/3R)	
200 Volts	230 Volts	460 Volts	575 Volts	NEMA Size	Half Size	Amp Range	Frame Size	Catalog Number	List Price $	Catalog Number	List Price $	Catalog Number	List Price $	Catalog Number	List Price $	Catalog Number	List Price $
½	¾	1½	2	0	—	0.75–3.4	A	30CUB†32A2V*		30CUB†32B2V*		30CUB†32W2V*		30CUB†32F2V*		30CUB†3202V*	
2	2	5	5	0	—	3–12	A1	30CUC†32A2V*		30CUC†32B2V*		30CUC†32W2V*		30CUC†32F2V*		30CUC†3202V*	
3	3	—	—	0	—	5.5–22	A1	30CUD†32A2V*		30CUD†32B2V*		30CUD†32W2V*		30CUD†32F2V*		30CUD†3202V*	
½	¾	1½	1½	1	—	0.75–3.4	A	30DUB†32A2V*		30DUB†32B2V*		30DUB†32W2V*		30DUB†32F2V*		30DUB†3202V*	
2	2	5	5	1	—	3–12	A1	30DUC†32A2V*		30DUC†32B2V*		30DUC†32W2V*		30DUC†32F2V*		30DUC†3202V*	
3	3	10	10	1	—	5.5–22	A1	30DUD†32A2V*		30DUD†32B2V*		30DUD†32W2V*		30DUD†32F2V*		30DUD†3202V*	
7½	7½	—	—	1	—	10–40	A1	30DUE†32A2V*		30DUE†32B2V*		30DUE†32W2V*		30DUE†32F2V*		30DUE†3202V*	
10	10	15	15	—	1¾	10–40	A1	30EUE†32A2V*		30EUE†32B2V*		30EUE†32W2V*		30EUE†32F2V*		30EUE†3202V*	
10	15	25	25	2	—	13–52	B	30FUF†32A2V*		30FUF†32B2V*		30FUF†32W2V*		30FUF†32F2V*		30FUF†3202V*	
15	20	30	30	—	2½	25–100	B	30GUG†32A2V*		30GUG†32B2V*		30GUG†32W2V*		30GUG†32F2V*		30GUG†3202V*	
25	30	50	50	3	—	25–100	B	30HUG†32A2V*		30HUG†32B2V*		30HUG†32W2V*		30HUG†32F2V*		30HUG†3202V*	
30	40	75	75	—	3½	50–200	B	30IUH†32A2V*		30IUH†32B2V*		30IUH†32W2V*		30IUH†32F2V*		30IUH†3202V*	
40	50	100	100	4	—	50–200	B	30JUH†32A2V*		30JUH†32B2V*		30JUH†32W2V*		30JUH†32F2V*		30JUH†3202V*	

Two Separate Windings, 3-Phase (Constant or Variable Torque)

Max Hp						Overload		Enclosure									
								Open Type③ Standard Auxiliary Contacts		NEMA 1 General Purpose		NEMA 4/4X Stainless① Watertight, Dust-tight, Corrosion Resistant 304 Stainless Steel 316 Stainless Steel (Optional)		NEMA 4X Fiberglass Watertight, Dust-tight Corrosion Resistant		NEMA 12 NEMA 3/3R① Industrial Use Weatherproof (Field Convertible to 3/3R)	
200 Volts	230 Volts	460 Volts	575 Volts	NEMA Size	Half Size	Amp Range	Frame Size	Catalog Number	List Price $	Catalog Number	List Price $	Catalog Number	List Price $	Catalog Number	List Price $	Catalog Number	List Price $
½	¾	1½	2	0	—	0.75–3.4	A	30CUB†32A1V*		30CUB†32B1V*		30CUB†32W1V*		30CUB†32F1V*		30CUB†3201V*	
2	2	5	5	0	—	3–12	A1	30CUC†32A1V*		30CUC†32B1V*		30CUC†32W1V*		30CUC†32F1V*		30CUC†3201V*	
3	3	—	—	0	—	5.5–22	A1	30CUD†32A1V*		30CUD†32B1V*		30CUD†32W1V*		30CUD†32F1V*		30CUD†3201V*	
½	¾	1½	1½	1	—	0.75–3.4	A	30DUB†32A1V*		30DUB†32B1V*		30DUB†32W1V*		30DUB†32F1V*		30DUB†3201V*	
2	2	5	5	1	—	3–12	A1	30DUC†32A1V*		30DUC†32B1V*		30DUC†32W1V*		30DUC†32F1V*		30DUC†3201V*	
3	3	10	10	1	—	5.5–22	A1	30DUD†32A1V*		30DUD†32B1V*		30DUD†32W1V*		30DUD†32F1V*		30DUD†3201V*	
7½	7½	—	—	1	—	10–40	A1	30DUE†32A1V*		30DUE†32B1V*		30DUE†32W1V*		30DUE†32F1V*		30DUE†3201V*	
10	10	15	15	—	1¾	10–40	A1	30EUE†32A1V*		30EUE†32B1V*		30EUE†32W1V*		30EUE†32F1V*		30EUE†3201V*	
10	15	25	25	2	—	13–52	B	30FUF†32A1V*		30FUF†32B1V*		30FUF†32W1V*		30FUF†32F1V*		30FUF†3201V*	
15	20	30	30	—	2½	25–100	B	30GUG†32A1V*		30GUG†32B1V*		30GUG†32W1V*		30GUG†32F1V*		30GUG†3201V*	
25	30	50	50	3	—	25–100	B	30HUG†32A1V*		30HUG†32B1V*		30HUG†32W1V*		30HUG†32F1V*		30HUG†3201V*	
30	40	75	75	—	3½	50–200	B	30IUH†32A1V*		30IUH†32B1V*		30IUH†32W1V*		30IUH†32F1V*		30IUH†3201V*	
40	50	100	100	4	—	50–200	B	30JUH†32A1V*		30JUH†32B1V*		30JUH†32W1V*		30JUH†32F1V*		30JUH†3201V*	

Note: All starter sizes carry one maximum Hp rating (per the National Electric Code).

① For conduit hubs and conversion instructions, see page 17-112.

② If motor FLA are unknown, select overload on the basis that low speed FLA will be no greater than 50% of high speed FLA.

③ Auxiliary contacts 30C-30E 4th pole built-in 30F-30J 2 NO & 2 NC

Two Speed Heavy Duty Starters

Constant HP with Solid State Overload, Class 30

Selection

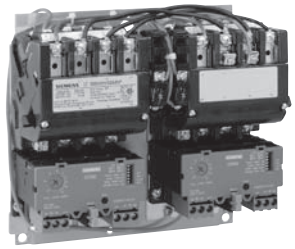

2S2W Starter
(ESP200 Overload)

Ordering Information

- Replace the (*) with a letter from the coil table. Dual voltage coils are wired on high voltage unless specified on order.
- Replace the (†) with the letter that corresponds to the correct FLA in High/Low Speed FLA Table.②
- Field Modification Kits see page 17-106.
- Factory Modifications see page 17-121.
- Dimensions see page 17-152.
- Wiring Diagrams see page 17-180.
- Replacement Parts see page 17-133.

Coil Table

60Hz Voltage	Letter
24	J
120	F
110–120/220–240	A
200–208	D
220–240	G
277	L
220–240/440–480	C
440–480	H
575–600	E

For other voltages and frequencies, see Factory Modifications page 17-121.

High/Low Speed FLA Table②

Size	FLA	OLR Frame Size	†
0,1	0.25–1	A	A
0,1	0.75–3.4	A	B
0,1	3–12	A1	C
0,1	5.5–22	A1	D
0-1 3/4	10–40	A1	E
2-3	13–52	B	F
2-3	25–100	B	G
3 1/2-4	50–200	B	H

* First (†) for high speed, second (†) for low speed. Use motor nameplate to select FLA. If motor FLA are unknown, select overload on the bases that the low speed FLA will be no greater than 50 % of high speed FLA.

One Winding Consequent Pole, 3-Phase (Constant Horsepower)

Max Hp						Enclosure									
						Open Type Standard Auxiliary Contacts③		NEMA 1 General Purpose		NEMA 4/4X Stainless① Watertight, Dust-tight, Corrosion Resistant 304 Stainless Steel		NEMA 4X Fiberglass Watertight, Dust-tight Corrosion Resistant		NEMA 12 NEMA 3/3R① Industrial Use Weatherproof (Field Convertible to 3/3R)	
200 Volts	230 Volts	460 Volts	575 Volts	NEMA Size	Half Size	Catalog Number	List Price $	Catalog Number	List Price $	Catalog Number	List Price $	Catalog Number	List Price $	Catalog Number	List Price $
2	2	3	3	0	—	30CU††32A2H*		30CU††32B2H*		30CU††32W2H*		30CU††32F2H*		30CU††3202H*	
5	5	7½	7½	1	—	30DU††32A2H*		30DU††32B2H*		30DU††32W2H*		30DU††32F2H*		30DU††3202H*	
7½	7½	10	10	—	1¾	30EU††32A2H*		30EU††32B2H*		30EU††32W2H*		30EU††32F2H*		30EU††3202H*	
7½	10	20	20	2	—	30FU††32A2H*		30FU††32B2H*		30FU††32W2H*		30FU††32F2H*		30FU††3202H*	
10	15	25	25	—	2½	30GU††32A2H*		30GU††32B2H*		30GU††32W2H*		30GU††32F2H*		30GU††3202H*	
20	25	40	40	3	—	30HU††32A2H*		30HU††32B2H*		30HU††32W2H*		30HU††32F2H*		30HU††3202H*	
25	30	50	50	—	3½	30IU††32A2H*		30IU††32B2H*		30IU††32W2H*		30IU††32F2H*		30IU††3202H*	
30	40	75	75	4	—	30JU††32A2H*		30JU††32B2H*		30JU††32W2H*		30JU††32F2H*		30JU††3202H*	

Two Separate Windings, 3-Phase (Constant Horsepower)

Max Hp						Enclosure									
						Open Type Standard Auxiliary Contacts③		NEMA 1 General Purpose		NEMA 4/4X Stainless① Watertight, Dust-tight, Corrosion Resistant 304 Stainless Steel		NEMA 4X Fiberglass Watertight, Dust-tight Corrosion Resistant		NEMA 12 NEMA 3/3R① Industrial Use Weatherproof (Field Convertible to 3/3R)	
200 Volts	230 Volts	460 Volts	575 Volts	NEMA Size	Half Size	Catalog Number	List Price $	Catalog Number	List Price $	Catalog Number	List Price $	Catalog Number	List Price $	Catalog Number	List Price $
2	2	3	3	0	—	30CU††32A1H*		30CU††32B1H*		30CU††32W1H*		30CU††32F1H*		30CU††3201H*	
5	5	7½	7½	1	—	30DU††32A1H*		30DU††32B1H*		30DU††32W1H*		30DU††32F1H*		30DU††3201H*	
7½	7½	10	10	—	13⁄4	30EU††32A1H*		30EU††32B1H*		30EU††32W1H*		30EU††32F1H*		30EU††3201H*	
7½	10	20	20	2	—	30FU††32A1H*		30FU††32B1H*		30FU††32W1H*		30FU††32F1H*		30FU††3201H*	
10	15	25	25	—	2½	30GU††32A1H*		30GU††32B1H*		30GU††32W1H*		30GU††32F1H*		30GU††3201H*	
20	25	40	40	3	—	30HU††32A1H*		30HU††32B1H*		30HU††32W1H*		30HU††32F1H*		30HU††3201H*	
25	30	50	50	—	3½	30IU††32A1H*		30IU††32B1H*		30IU††32W1H*		30IU††32F1H*		30IU††3201H*	
30	40	75	75	4	—	30JU††32A1H*		30JU††32B1H*		30JU††32W1H*		30JU††32F1H*		30JU††3201H*	

Note: All starter sizes carry one maximum Hp rating (per the National Electric Code).

① For conduit hubs and conversion instructions, see page 17-112.

② First (†) for high speed, second (†) for low speed. Use motor nameplate information to select FLA. If motor FLA are unknown, select overload on the basis that low speed FLA will be no greater than 50% of high speed FLA.

③ Auxiliary contacts 30C-30E 4th pole built-in 30F-30J 2 NO & 2 NC

Two Speed Heavy Duty Starters

Constant or Variable Torque with Ambient Compensated Bimetal Overload, Class 30

Selection

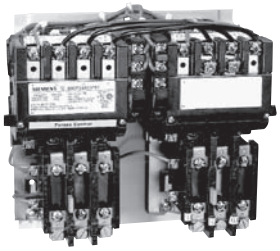

2S2W starter
(Amb. Comp. Bimetal OL)

Ordering Information

- Replace the (*) with a letter from the coil table. Dual voltage coils are wired on high voltage unless specified on order.
- Heater elements see page 17-126 (6 required)②
- Field Modification Kits see page 17-106.
- Factory Modifications see page 17-121.
- Dimensions see pages 17-145 open and 17-152 enclosed.
- Wiring Diagrams see page 17-180.
- Replacement Parts see page 17-133.
- For NO/NC SPDT contact on overload relay, replace "81" with "91". "81" indicates one NC contact.

Coil Table

60Hz Voltage	Letter
24	J
120	F
110–120/220–240	A
200–208	D
220–240	G
277	L
220–240/440–480	C
440–480	H
575–600	E

For other voltages and frequencies, see Factory Modifications page 17-121.

One Winding Consequent Pole, 3 Phase (Constant or Variable Torque)

Max Hp				Cont-actor Amp Rating	NEMA Size	Half Size	Enclosure									
							Open Type③		NEMA 1 General Purpose		NEMA 4/4X Stainless① Watertight, Dust-tight Corrosion Resistant 304 Stainless Steel		NEMA 4X Fiberglass Watertight, Dust-tight Corrosion Resistant		NEMA 12① NEMA 3/3R Industrial Use Weatherproof	
200 Volts	230 Volts	460 Volts	575 Volts				Catalog Number	List Price $	Catalog Number	List Price $	Catalog Number	List Price $	Catalog Number	List Price $	Catalog Number	List Price $
3	3	5	5	18	0	—	30CP32A2V*81		30CP32B2V*81		30CP32W2V*81		30CP32F2V*81		30CP3202V*81	
7½	7½	10	10	27	1	—	30DP32A2V*81		30DP32B2V*81		30DP32W2V*81		30DP32F2V*81		30DP3202V*81	
10	10	15	15	40	—	1¾	30EP32A2V*81		30EP32B2V*81		30EP32W2V*81		30EP32F2V*81		30EP3202V*81	
10	15	25	25	45	2	—	30FP32A2V*81		30FP32B2V*81		30FP32W2V*81		30FP32F2V*81		30FP3202V*81	
15	20	30	30	60	—	2½	30GP32A2V*81		30GP32B2V*81		30GP32W2V*81		30GP32F2V*81		30GP3202V*81	
25	30	50	50	90	3	—	30HP32A2V*81		30HP32B2V*81		30HP32W2V*81		30HP32F2V*81		30HP3202V*81	
30	40	75	75	115	—	3½	30IP32A2V*81		30IP32B2V*81		30IP32W2V*81		30IP32F2V*81		30IP3202V*81	
40	50	100	100	135	4	—	30JG32A2V*81		30JG32B2V*81		30JG32W2V*81		30JG32F2V*81		30JG3202V*81	

Two Separate Windings, 3-Phase (Constant or Variable Torque)

Max Hp				Cont-actor Amp Rating	NEMA Size	Half Size	Enclosure									
							Open Type③		NEMA 1 General Purpose		NEMA 4/4X Stainless① Watertight, Dust-tight Corrosion Resistant 304 Stainless Steel		NEMA 4X Fiberglass Watertight, Dust-tight Corrosion Resistant		NEMA 12① NEMA 3/3R Industrial Use Weatherproof	
200 Volts	230 Volts	460 Volts	575 Volts				Catalog Number	List Price $	Catalog Number	List Price $	Catalog Number	List Price $	Catalog Number	List Price $	Catalog Number	List Price $
3	3	5	5	18	0	—	30CP32A1V*81		30CP32B1V*81		30CP32W1V*81		30CP32F1V*81		30CP3201V*81	
7½	7½	10	10	27	1	—	30DP32A1V*81		30DP32B1V*81		30DP32W1V*81		30DP32F1V*81		30DP3201V*81	
10	10	15	15	40	—	1¾	30EP32A1V*81		30EP32B1V*81		30EP32W1V*81		30EP32F1V*81		30EP3201V*81	
10	15	25	25	45	2	—	30FP32A1V*81		30FP32B1V*81		30FP32W1V*81		30FP32F1V*81		30FP3201V*81	
15	20	30	30	60	—	2½	30GP32A1V*81		30GP32B1V*81		30GP32W1V*81		30GP32F1V*81		30GP3201V*81	
25	30	50	50	90	3	—	30HP32A1V*81		30HP32B1V*81		30HP32W1V*81		30HP32F1V*81		30HP3201V*81	
30	40	75	75	115	—	3½	30IP32A1V*81		30IP32B1V*81		30IP32W1V*81		30IP32F1V*81		30IP3201V*81	
40	50	100	100	135	4	—	30JG32A1V*81		30JG32B1V*81		30JG32W1V*81		30JG32F1V*81		30JG3201V*81	

Note: Hp's shown above are based on the overload amp range for the FLA's (per the National Electric Code) of typical industrial motors. All starter sizes carry one maximum Hp rating.

① For conduit hubs and conversion instructions, see page 17-112.
② If motor FLA are unknown, select heater elements on the basis that low speed FLA will be no greater than 50% of high speed FLA.

③ Auxiliary contacts
30C-30E 4th pole built-in
30F-30J 2 NO & 2 NC

Constant HP with Ambient Compensated Bimetal Overload, Class 30

Selection

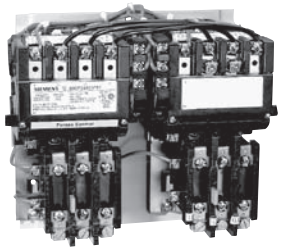

2S2W starter
(Amb. Comp. Bimetal OL)

Ordering Information

- Replace the (*) with a letter from the coil table. Dual voltage coils are wired on high voltage unless specified on order.
- Heater elements see page 17-126 (6 required)②
- Field Modification Kits see page 17-106.
- Factory Modifications see page 17-121.
- Dimensions see pages 17-145 open and 17-152 enclosed.
- Wiring Diagrams see page 17-180.
- Replacement Parts see page 17-133.
- For NO/NC SPDT contact on overload relay, replace "81" with "91". "81" indicates one NC contact.

Coil Table

60Hz Voltage	Letter
24	J
120	F
110–120/220–240	A
200–208	D
220–240	G
277	L
220–240/440–480	C
440–480	H
575–600	E

For other voltages and frequencies, see Factory Modifications page 17-121.

One Winding Consequent Pole, 3-Phase (Constant Horsepower)

Max Hp				Cont-actor Amp Rating	NEMA Size	Half Size	Enclosure									
							Open Type③		NEMA 1 General Purpose		NEMA 4/4X Stainless① Watertight, Dust-tight Corrosion Resistant 304 Stainless Steel		NEMA 4X Fiberglass Watertight, Dust-tight Corrosion Resistant		NEMA 12① NEMA 3/3R Industrial Use Weatherproof	
200 Volts	230 Volts	460 Volts	575 Volts				Catalog Number	List Price $	Catalog Number	List Price $	Catalog Number	List Price $	Catalog Number	List Price $	Catalog Number	List Price $
2	2	3	3	18	0	—	30CP32A2H*81		30CP32B2H*81		30CP32W2H*81		30CP32F2H*81		30CP3202H*81	
5	5	7½	7½	27	1	—	30DP32A2H*81		30DP32B2H*81		30DP32W2H*81		30DP32F2H*81		30DP3202H*81	
7½	7½	10	10	40	—	1¾	30EP32A2H*81		30EP32B2H*81		30EP32W2H*81		30EP32F2H*81		30EP3202H*81	
7½	10	20	20	45	2	—	30FP32A2H*81		30FP32B2H*81		30FP32W2H*81		30FP32F2H*81		30FP3202H*81	
10	15	25	25	60	—	2½	30GP32A2H*81		30GP32B2H*81		30GP32W2H*81		30GP32F2H*81		30GP3202H*81	
20	25	40	40	90	3	—	30HP32A2H*81		30HP32B2H*81		30HP32W2H*81		30HP32F2H*81		30HP3202H*81	
25	30	50	50	115	—	3½	30IP32A2H*81		30IP32B2H*81		30IP32W2H*81		30IP32F2H*81		30IP3202H*81	
30	40	75	75	135	4	—	30JG32A2H*81		30JG32B2H*81		30JG32W2H*81		30JG32F2H*81		30JG3202H*81	

Two Separate Windings, 3-Phase (Constant Horsepower)

Max Hp				Cont-actor Amp Rating	NEMA Size	Half Size	Enclosure									
							Open Type③		NEMA 1 General Purpose		NEMA 4/4X Stainless① Watertight, Dust-tight Corrosion Resistant 304 Stainless Steel		NEMA 4X Fiberglass Watertight, Dust-tight Corrosion Resistant		NEMA 12① NEMA 3/3R Industrial Use Weatherproof	
200 Volts	230 Volts	460 Volts	575 Volts				Catalog Number	List Price $	Catalog Number	List Price $	Catalog Number	List Price $	Catalog Number	List Price $	Catalog Number	List Price $
2	2	3	3	18	0	—	30CP32A1H*81		30CP32B1H*81		30CP32W1H*81		30CP32F1H*81		30CP3201H*81	
5	5	7½	7½	27	1	—	30DP32A1H*81		30DP32B1H*81		30DP32W1H*81		30DP32F1H*81		30DP3201H*81	
7½	7½	10	10	40	—	1¾	30EP32A1H*81		30EP32B1H*81		30EP32W1H*81		30EP32F1H*81		30EP3201H*81	
7½	10	20	20	45	2	—	30FP32A1H*81		30FP32B1H*81		30FP32W1H*81		30FP32F1H*81		30FP3201H*81	
10	15	25	25	60	—	2½	30GP32A1H*81		30GP32B1H*81		30GP32W1H*81		30GP32F1H*81		30GP3201H*81	
20	25	40	40	90	3	—	30HP32A1H*81		30HP32B1H*81		30HP32W1H*81		30HP32F1H*81		30HP3201H*81	
25	30	50	50	115	—	3½	30IP32A1H*81		30IP32B1H*81		30IP32W1H*81		30IP32F1H*81		30IP3201H*81	
30	40	75	75	135	4	—	30JG32A1H*81		30JG32B1H*81		30JG32W1H*81		30JG32F1H*81		30JG3201H*81	

Note: Hp's shown above are based on the overload amp range for the FLA's (per the National Electric Code) of typical industrial motors. All starter sizes carry one maximum Hp rating.

① For conduit hubs and conversion instructions, see page 17-112.
② If motor FLA are unknown, select heater element on the basis that low speed FLA will be no greater than 50% of high speed FLA.

③ Auxiliary contacts
30C-30E 4th pole built-in
30F-30J 2 NO & 2 NC

Combination Two Speed Heavy Duty Starters

Non-Fusible, Constant or Variable Torque with Solid State Overload, Class 32

Selection

Ordering Information

- Replace the (*) with a letter from the coil table. Dual voltage coils are wired on high voltage unless specified on order.
- Replace the (†) with the letter that corresponds to the correct low speed FLA in the FLA table.③
- Fuse clips see page 17-122.
- Field Modification Kits see page 17-106.
- Factory Modifications see page 17-121.
- Dimensions see page 17-168.
- Wiring Diagrams see page 17-180.
- Replacement Parts see page 17-133.

Coil Table

60Hz Voltage	Letter
24	J
120	F
110–120/220–240①	A
200–208	D
220–240	G
277	L
220–240/440–480①	C
440–480	H
575–600	E

For other voltages and frequencies, see Factory Modifications page 17-121.

Low Speed FLA Table

Size	FLA	OLR Frame Size	†
0,1	0.25–1	A	A
0,1	0.75–3.4	A	B
0,1	3–12	A1	C
0,1	5.5–22	A1	D
0-1 3/4	10–40	A1	E
2-3	13–52	B	F
2-3	25–100	B	G
3 1/2-4	50–200	B	H

One Winding Consequent Pole, 3-Phase (Constant or Variable Torque)

Max Hp						Overload			Enclosure							
									NEMA 1 General Purpose		NEMA 4/4X Stainless② Watertight, Dust-tight, Corrosion Resistant 304 Stainless Steel		NEMA 4X Fiberglass Watertight, Dust-tight Corrosion Resistant		NEMA 12, NEMA 3/3R②, NEMA 4 Painted Industrial Use Weatherproof Watertight, Dust-tight	
200 Volts	230 Volts	460 Volts	575 Volts	NEMA Size	Half Size	Amp Range	Frame Size	Disc. Amp Range	Catalog Number	List Price $	Catalog Number	List Price $	Catalog Number	List Price $	Catalog Number	List Price $
½	¾	1½	2	0	—	0.75–3.4	A	30	32CUB†92B2V2*		32CUB†92W2V2*		32CUB†92F2V2*		32CUB†92N2V2*	
2	2	5	5	0	—	3–12	A1	30	32CUC†92B2V2*		32CUC†92W2V2*		32CUC†92F2V2*		32CUC†92N2V2*	
3	3	—	—	0	—	5.5–22	A1	30	32CUD†92B2V2*		32CUD†92W2V2*		32CUD†92F2V2*		32CUD†92N2V2*	
½	¾	1½	1½	1	—	0.75–3.4	A	30	32DUB†92B2V2*		32DUB†92W2V2*		32DUB†92F2V2*		32DUB†92N2V2*	
2	2	5	5	1	—	3–12	A1	30	32DUC†92B2V2*		32DUC†92W2V2*		32DUC†92F2V2*		32DUC†92N2V2*	
3	3	10	10	1	—	5.5–22	A1	30	32DUD†92B2V2*		32DUD†92W2V2*		32DUD†92F2V2*		32DUD†92N2V2*	
7½	7½	—	—	1	—	10–40	A1	60	32DUE†92B2V2*		32DUE†92W2V2*		32DUE†92F2V2*		32DUE†92N2V2*	
10	10	15	15	—	1¾	10–40	A1	60	32EUE†92B2V2*		32EUE†92W2V2*		32EUE†92F2V2*		32EUE†92N2V2*	
10	15	25	25	2	—	13–52	B	60	32FUF†92B2V2*		32FUF†92W2V2*		32FUF†92F2V2*		32FUF†92N2V2*	
15	20	30	30	—	2½	25–100	B	100	32GUG†92B2V2*		32GUG†92W2V2*		32GUG†92F2V2*		32GUG†92N2V2*	
20	25	50	50	3	—	25–100	B	100	32HUG†92B2V2*		32HUG†92W2V2*		32HUG†92F2V2*		32HUG†92N2V2*	
30	40	75	75	—	3½	50–200	B	200	32IUH†92B2V2*		32IUH†92W2V2*		32IUH†92F2V2*		32IUH†92N2V2*	
40	50	100	100	4	—	50–200	B	200	32JUH†92B2V2*		32JUH†92W2V2*		32JUH†92F2V2*		32JUH†92N2V2*	

Two Separate Windings, 3-Phase (Constant or Variable Torque)

Max Hp						Overload			Enclosure							
									NEMA 1 General Purpose		NEMA 4/4X Stainless② Watertight, Dust-tight, Corrosion Resistant 304 Stainless Steel		NEMA 4X Fiberglass Watertight, Dust-tight Corrosion Resistant		NEMA 12, NEMA 3/3R②, NEMA 4 Painted Industrial Use Weatherproof Watertight, Dust-tight	
200 Volts	230 Volts	460 Volts	575 Volts	NEMA Size	Half Size	Amp Range	Frame Size	Disc. Amp Range	Catalog Number	List Price $	Catalog Number	List Price $	Catalog Number	List Price $	Catalog Number	List Price $
½	¾	1½	2	0	—	0.75–3.4	A	30	32CUB†92B1V2*		32CUB†92W1V2*		32CUB†92F1V2*		32CUB†92N1V2*	
2	2	5	5	0	—	3–12	A1	30	32CUC†92B1V2*		32CUC†92W1V2*		32CUC†92F1V2*		32CUC†92N1V2*	
3	3	—	—	0	—	5.5–22	A1	30	32CUD†92B1V2*		32CUD†92W1V2*		32CUD†92F1V2*		32CUD†92N1V2*	
½	¾	1½	1½	1	—	0.75–3.4	A	30	32DUB†92B1V2*		32DUB†92W1V2*		32DUB†92F1V2*		32DUB†92N1V2*	
2	2	5	5	1	—	3–12	A1	30	32DUC†92B1V2*		32DUC†92W1V2*		32DUC†92F1V2*		32DUC†92N1V2*	
3	3	10	10	1	—	5.5–22	A1	30	32DUD†92B1V2*		32DUD†92W1V2*		32DUD†92F1V2*		32DUD†92N1V2*	
7½	7½	—	—	1	—	10–40	A1	60	32DUE†92B1V2*		32DUE†92W1V2*		32DUE†92F1V2*		32DUE†92N1V2*	
10	10	15	15	—	1¾	10–40	A1	60	32EUE†92B1V2*		32EUE†92W1V2*		32EUE†92F1V2*		32EUE†92N1V2*	
10	15	25	25	2	—	13–52	B	60	32FUF†92B1V2*		32FUF†92W1V2*		32FUF†92F1V2*		32FUF†92N1V2*	
15	20	30	30	—	2½	25–100	B	100	32GUG†92B1V2*		32GUG†92W1V2*		32GUG†92F1V2*		32GUG†92N1V2*	
20	25	50	50	3	—	25–100	B	100	32HUG†92B1V2*		32HUG†92W1V2*		32HUG†92F1V2*		32HUG†92N1V2*	
30	40	75	75	—	3½	50–200	B	200	32IUH†92B1V2*		32IUH†92W1V2*		32IUH†92F1V2*		32IUH†92N1V2*	
40	50	100	100	4	—	50–200	B	200	32JUH†92B1V2*		32JUH†92W1V2*		32JUH†92F1V2*		32JUH†92N1V2*	

Note: All starter sizes carry one maximum Hp rating (per the National Electric Code).

① Dual voltage coils not available in modified starters.

② For conduit hubs and conversion instructions, see page 17-112.

③ If motor FLA are unknown, select overload on the basis that low speed FLA will be no greater than 50% of high speed FLA.

Combination Two Speed Heavy Duty Starters

Non-Fusible, Constant Horsepower with Solid State Overload, Class 32

Selection

Ordering Information

- Replace the (*) with a letter from the coil table. Dual voltage coils are wired on high voltage unless specified on order.
- Replace the (†) with the letter that corresponds to the correct FLA in the High/Low Speed FLA Table.③
- Fuse clips see page 17-122.
- Field Modification Kits see page 17-106.
- Factory Modifications see page 17-121.
- Dimensions see page 17-168.
- Wiring Diagrams see page 17-180.
- Replacement Parts see page 17-133.

Coil Table

60Hz Voltage	Letter
24	J
120	F
110–120/220–240①	A
200–208	D
220–240	G
277	L
220–240/440–480①	C
440–480	H
575–600	E

For other voltages and frequencies see Factory Modifications page 17-121.

High/Low Speed FLA Table③

Size	FLA	OLR Frame Size	†
0,1	0.25–1	A	A
0,1	0.75–3.4	A	B
0,1	3–12	A1	C
0,1	5.5–22	A1	D
0-1 3/4	10–40	A1	E
2-3	13–52	B	F
2-3	25–100	B	G
3 1/2-4	50–200	B	H

* First (†) for high speed, second (†) for low speed. Use motor nameplate to select FLA. If motor FLA are unknown, select overload on the bases that the low speed FLA will be no greater than 50 % of high speed FLA.

One Winding Consequent Pole, 3-Phase (Constant Horsepower)

Max Hp						Overload			Enclosure							
									NEMA 1 General Purpose		NEMA 4/4X Stainless② Watertight, Dust-tight, Corrosion Resistant 304 Stainless Steel		NEMA 4X Fiberglass Watertight, Dust-tight Corrosion Resistant		NEMA 12, NEMA 3/3R②, NEMA 4 Painted Industrial Use Weatherproof Watertight, Dust-tight	
200 Volts	230 Volts	460 Volts	575 Volts	NEMA Size	Half Size	Amp Range	Frame Size	Disc. Amp Range	Catalog Number	List Price $	Catalog Number	List Price $	Catalog Number	List Price $	Catalog Number	List Price $
2	2	3	3	0	—	—	—	30	32CU††92B2H2*		32CU††92W2H2*	4054.00	32CU††92F2H2*		32CU††92N2H2*	
5	5	7½	7½	1	—	—	—	30	32DU††92B2H2*		32DU††92W2H2*	4173.00	32DU††92F2H2*		32DU††92N2H2*	
7½	7½	10	10	—	1¾	—	—	60	32EU††92B2H2*		32EU††92W2H2*	4873.00	32EU††92F2H2*		32EU††92N2H2*	
7½	10	20	20	2	—	—	—	60	32FU††92B2H2*		32FU††92W2H2*	6146.00	32FU††92F2H2*		32FU††92N2H2*	
10	15	25	25	—	2½	—	—	100	32GU††92B2H2*		32GU††92W2H2*	7219.00	32GU††92F2H2*		32GU††92N2H2*	
20	25	40	40	3	—	—	—	100	32HU††92B2H2*		32HU††92W2H2*	9321.00	32HU††92F2H2*		32HU††92N2H2*	
25	30	50	50	—	3½	—	—	200	32IU††92B2H2*		32IU††92W2H2*	18079.00	32IU††92F2H2*		32IU††92N2H2*	
30	40	75	75	4	—	—	—	200	32JU††92B2H2*		32JU††92W2H2*	19263.00	32JU††92F2H2*		32JU††92N2H2*	

Two Separate Windings, 3-Phase (Constant Horsepower)

Max Hp						Overload			Enclosure							
									NEMA 1 General Purpose		NEMA 4/4X Stainless② Watertight, Dust-tight, Corrosion Resistant 304 Stainless Steel		NEMA 4X Fiberglass Watertight, Dust-tight Corrosion Resistant		NEMA 12, NEMA 3/3R②, NEMA 4 Painted Industrial Use Weatherproof Watertight, Dust-tight	
200 Volts	230 Volts	460 Volts	575 Volts	NEMA Size	Half Size	Amp Range	Frame Size	Disc. Amp Range	Catalog Number	List Price $	Catalog Number	List Price $	Catalog Number	List Price $	Catalog Number	List Price $
2	2	3	3	0	—	—	—	30	32CU††92B1H2*		32CU††92W1H2*		32CU††92F1H2*		32CU††92N1H2*	
5	5	7½	7½	1	—	—	—	30	32DU††92B1H2*		32DU††92W1H2*		32DU††92F1H2*		32DU††92N1H2*	
7½	7½	10	10	—	1¾	—	—	60	32EU††92B1H2*		32EU††92W1H2*		32EU††92F1H2*		32EU††92N1H2*	
7½	10	20	20	2	—	—	—	60	32FU††92B1H2*		32FU††92W1H2*		32FU††92F1H2*		32FU††92N1H2*	
10	15	25	25	—	2½	—	—	100	32GU††92B1H2*		32GU††92W1H2*		32GU††92F1H2*		32GU††92N1H2*	
20	25	40	40	3	—	—	—	100	32HU††92B1H2*		32HU††92W1H2*		32HU††92F1H2*		32HU††92N1H2*	
25	30	50	50	—	3½	—	—	200	32IU††92B1H2*		32IU††92W1H2*		32IU††92F1H2*		32IU††92N1H2*	
30	40	75	75	4	—	—	—	200	32JU††92B1H2*		32JU††92W1H2*		32JU††92F1H2*		32JU††92N1H2*	

Note: All starter sizes carry one maximum Hp rating (per the National Electric Code).

① Dual voltage coils not available in modified starters.

② For conduit hubs and conversion instructions, see page 17-112.

③ First † for high speed, second † for low speed. Use motor nameplate information to select FLA. If motor FLA are unknown, select overload on the basis that low speed FLA will be no greater than 50% of high speed FLA.

Combination Two Speed Heavy Duty Starters

Non-Fusible, Constant or Variable Torque with Ambient Compensated Bimetal Overload, Class 32

Selection

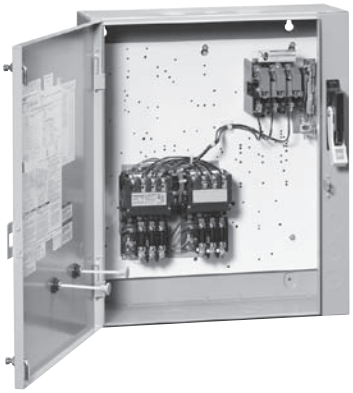

Ordering Information

- Replace the (*) with a letter from the coil table. Dual voltage coils are wired on high voltage unless specified on order.
- Heater elements see page 17-126. (6 required)
- Fuse clips see page 17-122.
- Field Modification Kits see page 17-106.
- Factory Modifications see page 17-121.
- Dimensions see page 17-168.
- Wiring Diagrams see page 17-180.
- Replacement Parts see page 17-133.
- For NO/NC SPDT contact on overload relay, replace "81" with "91"."81" indicates one NC contact.

Coil Table

60Hz Voltage	Letter
24	J
120	F
110–120/220–240①	A
200–208	D
220–240	G
277	L
220–240/440–480①	C
440–480	H
575–600	E

For other voltages and frequencies, see Factory Modifications page 17-121.

One Winding Consequent Pole, 3-Phase (Constant or Variable Torque)

Max Hp							Enclosure							
							NEMA 1 General Purpose		NEMA 4/4X Stainless② Watertight, Dust-tight Corrosion Resistant 304 Stainless Steel		NEMA 4X Fiberglass Watertight, Dust-tight Corrosion Resistant		NEMA 12, NEMA 3/3R② NEMA 4 Painted Industrial Use Weatherproof Watertight, Dust-tight	
200 Volts	230 Volts	460 Volts	575 Volts	NEMA Size	Disc Half Size	Amp Rating	Catalog Number	List Price $	Catalog Number	List Price $	Catalog Number	List Price $	Catalog Number	List Price $
3	3	5	5	0	—	30	32CP92B2V2*81		32CP92W2V2*81		32CP92F2V2*81		32CP92N2V2*81	
7½	7½	10	10	1	—	30	32DP92B2V2*81		32DP92W2V2*81		32DP92F2V2*81		32DP92N2V2*81	
10	10	15	15	—	1¾	60	32EP92B2V2*81		32EP92W2V2*81		32EP92F2V2*81		32EP92N2V2*81	
10	15	25	25	2	—	60	32FP92B2V2*81		32FP92W2V2*81		32FP92F2V2*81		32FP92N2V2*81	
15	20	30	30	—	2½	100	32GP92B2V2*81		32GP92W2V2*81		32GP92F2V2*81		32GP92N2V2*81	
20	25	50	50	3	—	100	32HP92B2V2*81		32HP92W2V2*81		32HP92F2V2*81		32HP92N2V2*81	
30	40	75	75	—	3½	200	32IP92B2V2*81		32IP92W2V2*81		32IP92F2V2*81		32IP92N2V2*81	
40	50	100	100	4	—	200	32JP92B2V2*81		32JP92W2V2*81		32JP92F2V2*81		32JP92N2V2*81	

Two Separate Windings, 3-Phase (Constant or Variable Torque)

Max Hp							Enclosure							
							NEMA 1 General Purpose		NEMA 4/4X Stainless② Watertight, Dust-tight Corrosion Resistant 304 Stainless Steel		NEMA 4X Fiberglass Watertight, Dust-tight Corrosion Resistant		NEMA 12, NEMA 3/3R② NEMA 4 Painted Industrial Use Weatherproof Watertight, Dust-tight	
200 Volts	230 Volts	460 Volts	575 Volts	NEMA Size	Disc Half Size	Amp Rating	Catalog Number	List Price $	Catalog Number	List Price $	Catalog Number	List Price $	Catalog Number	List Price $
3	3	5	5	0	—	30	32CP92B1V2*81		32CP92W1V2*81		32CP92F1V2*81		32CP92N1V2*81	
7½	7½	10	10	1	—	30	32DP92B1V2*81		32DP92W1V2*81		32DP92F1V2*81		32DP92N1V2*81	
10	10	15	15	—	1¾	60	32EP92B1V2*81		32EP92W1V2*81		32EP92F1V2*81		32EP92N1V2*81	
10	15	25	25	2	—	60	32FP92B1V2*81		32FP92W1V2*81		32FP92F1V2*81		32FP92N1V2*81	
15	20	30	30	—	2½	100	32GP92B1V2*81		32GP92W1V2*81		32GP92F1V2*81		32GP92N1V2*81	
20	25	50	50	3	—	100	32HP92B1V2*81		32HP92W1V2*81		32HP92F1V2*81		32HP92N1V2*81	
30	40	75	75	—	3½	200	32IP92B1V2*81		32IP92W1V2*81		32IP92F1V2*81		32IP92N1V2*81	
40	50	100	100	4	—	200	32JP92B1V2*81		32JP92W1V2*81		32JP92F1V2*81		32JP92N1V2*81	

Note: Hp's shown above are based on the overload amp range for the FLA's (per the National Electric Code) of typical industrial motors. All starter sizes carry one maximum Hp rating.

① Dual voltage coils not available in modified starters.
② For conduit hubs and conversion instructions, see page 17-112.

Combination Two Speed Heavy Duty Starters

Non-Fusible, Constant Horsepower with Ambient Compensated Bimetal Overload, Class 32 *Selection*

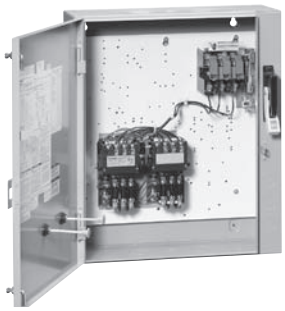

Ordering Information

- Replace the (*) with a letter from the coil table. Dual voltage coils are wired on high voltage unless specified on order.
- Heater elements see page 17-126. (6 Required)
- Fuse clips see page 17-122.
- Field Modification Kits see page 17-106.
- Factory Modifications see page 17-121.
- Dimensions see page 17-168.
- Wiring Diagrams see page 17-180.
- Replacement Parts see page 17-133.
- For NO/NC SPDT contact on overload relay, replace "81" with "91". "81" indicates one NC contact..

Coil Table

60Hz Voltage	Letter
24	J
120	F
110–120/220–240①	A
200–208	D
220–240	G
277	L
220–240/440–480①	C
440–480	H
575–600	E

For other voltages and frequencies, see Factory Modifications page 17-121.

One Winding Consequent Pole, 3-Phase (Constant Horsepower)

Max Hp							Enclosure							
							NEMA 1 General Purpose		NEMA 4/4X Stainless② Watertight, Dust-tight Corrosion Resistant 304 Stainless Steel		NEMA 4X Fiberglass Watertight, Dust-tight Corrosion Resistant		NEMA 12, NEMA 3/3R② NEMA 4 Painted Industrial Use Weatherproof Watertight, Dust-tight	
200 Volts	230 Volts	460 Volts	575 Volts	NEMA Size	Disc Half Size	Amp Rating	Catalog Number	List Price $	Catalog Number	List Price $	Catalog Number	List Price $	Catalog Number	List Price $
2	2	3	3	0	—	30	32CP92B2H2*81		32CP92W2H2*81		32CP92F2H2*81		32CP92N2H2*81	
5	5	7½	7½	1	—	30	32DP92B2H2*81		32DP92W2H2*81		32DP92F2H2*81		32DP92N2H2*81	
7½	7½	10	10	—	1¾	60	32EP92B2H2*81		32EP92W2H2*81		32EP92F2H2*81		32EP92N2H2*81	
7½	10	20	20	2	—	60	32FP92B2H2*81		32FP92W2H2*81		32FP92F2H2*81		32FP92N2H2*81	
10	15	25	25	—	2½	100	32GP92B2H2*81		32GP92W2H2*81		32GP92F2H2*81		32GP92N2H2*81	
20	25	40	40	3	—	100	32HP92B2H2*81		32HP92W2H2*81		32HP92F2H2*81		32HP92N2H2*81	
25	30	50	50	—	3½	200	32IP92B2H2*81		32IP92W2H2*81		32IP92F2H2*81		32IP92N2H2*81	
30	40	75	75	4	—	200	32JP92B2H2*81		32JP92W2H2*81		32JP92F2H2*81		32JP92N2H2*81	

Two Separate Windings, 3-Phase (Constant Horsepower)

Max Hp							Enclosure							
							NEMA 1 General Purpose		NEMA 4/4X Stainless② Watertight, Dust-tight Corrosion Resistant 304 Stainless Steel		NEMA 4X Fiberglass Watertight, Dust-tight Corrosion Resistant		NEMA 12, NEMA 3/3R② NEMA 4 Painted Industrial Use Weatherproof Watertight, Dust-tight	
200 Volts	230 Volts	460 Volts	575 Volts	NEMA Size	Half Size	Disc Amp Rating	Catalog Number	List Price $	Catalog Number	List Price $	Catalog Number	List Price $	Catalog Number	List Price $
2	2	3	3	0	—	30	32CP92B1H2*81		32CP92W1H2*81		32CP92F1H2*81		32CP92N1H2*81	
5	5	7½	7½	1	—	30	32DP92B1H2*81		32DP92W1H2*81		32DP92F1H2*81		32DP92N1H2*81	
7½	7½	10	10	—	1¾	60	32EP92B1H2*81		32EP92W1H2*81		32EP92F1H2*81		32EP92N1H2*81	
7½	10	20	20	2	—	60	32FP92B1H2*81		32FP92W1H2*81		32FP92F1H2*81		32FP92N1H2*81	
10	15	25	25	—	2½	100	32GP92B1H2*81		32GP92W1H2*81		32GP92F1H2*81		32GP92N1H2*81	
20	25	40	40	3	—	100	32HP92B1H2*81		32HP92W1H2*81		32HP92F1H2*81		32HP92N1H2*81	
25	30	50	50	—	3½	200	32IP92B1H2*81		32IP92W1H2*81		32IP92F1H2*81		32IP92N1H2*81	
30	40	75	75	4	—	200	32JP92B1H2*81		32JP92W1H2*81		32JP92F1H2*81		32JP92N1H2*81	

Note: Hp's shown above are based on the overload amp range for the FLA's (per the National Electric Code) of typical industrial motors. All starter sizes carry one maximum Hp rating.

① Dual voltage coils not available in modified starters.
② For conduit hubs and conversion instructions, see page 17-112.

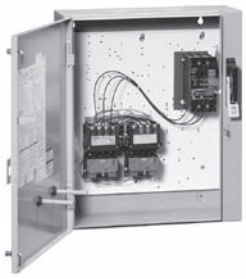

Ordering Information

- Replace the (*) with a letter from the coil table. Dual voltage coils are wired on high voltage unless specified on order.
- Replace the (†) with the letter that corresponds to the correct low speed FLA in the FLA table.③
- Field Modification Kits see page 17-106.
- Factory Modifications see page 17-121.
- Dimensions see page 17-168.
- Wiring Diagrams see page 17-180.
- Replacement Parts see page 17-133.

Coil Table

60Hz Voltage	Letter
24	J
120	F
110–120/220–240①	A
200–208	D
220–240	G
277	L
220–240/440–480①	C
440–480	H
575–600	E

For other voltages and frequencies, see Factory Modifications page 17-121.

Low Speed FLA Table

Size	FLA	OLR Frame Size	†
0,1	0.25–1	A	A
0,1	0.75–3.4	A	B
0,1	3–12	A1	C
0,1	5.5–22	A1	D
0-1 3/4	10–40	A1	E
2-3	13–52	B	F
2-3	25–100	B	G
3 1/2-4	50–200	B	H

One Winding Consequent Pole, 3-Phase (Constant or Variable Torque)

Max Hp							Overload		Enclosure							
									NEMA 1 General Purpose		NEMA 4/4X Stainless② Watertight, Dust-tight, Corrosion Resistant 304 Stainless Steel		NEMA 4X Fiberglass Watertight, Dust-tight Corrosion Resistant		NEMA 12, NEMA 3/3R②, NEMA 4 Painted Industrial Use Weatherproof Watertight, Dust-tight	
200 Volts	230 Volts	460 Volts	575 Volts	NEMA Size	Half Size	Motor Circuit Interruter ETI Amps	Amp Range	Frame Size	Catalog Number	List Price $	Catalog Number	List Price $	Catalog Number	List Price $	Catalog Number	List Price $
½	¾	1½	2	0	—	3	0.75–3.4	A	**32CUB†92B2V***		**32CUB†92W2V***		**32CUB†92F2V***		**32CUB†92N2V***	
2	2	5	5	0	—	10	3–12	A1	**32CUC†92B2V***		**32CUC†92W2V***		**32CUC†92F2V***		**32CUC†92N2V***	
3	3	—	—	0	—	25	5.5–22	A1	**32CUD†92B2V***		**32CUD†92W2V***		**32CUD†92F2V***		**32CUD†92N2V***	
½	¾	1½	1½	1	—	3	0.75–3.4	A	**32DUB†92B2V***		**32DUB†92W2V***		**32DUB†92F2V***		**32DUB†92N2V***	
2	2	5	5	1	—	10	3–12	A1	**32DUC†92B2V***		**32DUC†92W2V***		**32DUC†92F2V***		**32DUC†92N2V***	
3	3	10	10	1	—	25	5.5–22	A1	**32DUD†92B2V***		**32DUD†92W2V***		**32DUD†92F2V***		**32DUD†92N2V***	
7½	7½	—	—	1	—	30	10–40	A1	**32DUE†92B2V***		**32DUE†92W2V***		**32DUE†92F2V***		**32DUE†92N2V***	
—	—	15	15	—	1¾	40	10–40	A1	**32EUE†92B2V***		**32EUE†92W2V***		**32EUE†92F2V***		**32EUE†92N2V***	
10	15	25	25	2	—	50	13–52	B	**32FUF†92B2V***		**32FUF†92W2V***		**32FUF†92F2V***		**32FUF†92N2V***	
15	20	30	30	—	2½	100	25–100	B	**32GUG†92B2V***		**32GUG†92W2V***		**32GUG†92F2V***		**32GUG†92N2V***	
25	30	50	50	3	—	125	25–100	B	**32HUG†92B2V***		**32HUG†92W2V***		**32HUG†92F2V***		**32HUG†92N2V***	
30	40	75	75	—	3½	125	50–200	B	**32IUH†92B2V***		**32IUH†92W2V***		**32IUH†92F2V***		**32IUH†92N2V***	
40	50	100	100	4	—	150	50–200	B	**32JUH†92B2V***		**32JUH†92W2V***		**32JUH†92F2V***		**32JUH†92N2V***	

Two Separate Windings, 3-Phase (Constant or Variable Torque)

Max Hp							Overload		Enclosure							
									NEMA 1 General Purpose		NEMA 4/4X Stainless② Watertight, Dust-tight, Corrosion Resistant 304 Stainless Steel		NEMA 4X Fiberglass Watertight, Dust-tight Corrosion Resistant		NEMA 12, NEMA 3/3R②, NEMA 4 Painted Industrial Use Weatherproof Watertight, Dust-tight	
200 Volts	230 Volts	460 Volts	575 Volts	NEMA Size	Half Size	Motor Circuit Interruter ETI Amps	Amp Range	Frame Size	Catalog Number	List Price $	Catalog Number	List Price $	Catalog Number	List Price $	Catalog Number	List Price $
½	¾	1½	2	0	—	3	0.75–3.4	A	**32CUB†92B1V***		**32CUB†92W1V***		**32CUB†92F1V***		**32CUB†92N1V***	
2	2	5	5	0	—	10	3–12	A1	**32CUC†92B1V***		**32CUC†92W1V***		**32CUC†92F1V***		**32CUC†92N1V***	
3	3	—	—	0	—	25	5.5–22	A1	**32CUD†92B1V***		**32CUD†92W1V***		**32CUD†92F1V***		**32CUD†92N1V***	
½	¾	1½	1½	1	—	3	0.75–3.4	A	**32DUB†92B1V***		**32DUB†92W1V***		**32DUB†92F1V***		**32DUB†92N1V***	
2	2	5	5	1	—	10	3–12	A1	**32DUC†92B1V***		**32DUC†92W1V***		**32DUC†92F1V***		**32DUC†92N1V***	
3	3	10	10	1	—	25	5.5–22	A1	**32DUD†92B1V***		**32DUD†92W1V***		**32DUD†92F1V***		**32DUD†92N1V***	
7½	7½	—	—	1	—	30	10–40	A1	**32DUE†92B1V***		**32DUE†92W1V***		**32DUE†92F1V***		**32DUE†92N1V***	
—	—	15	15	—	1¾	40	10–40	A1	**32EUE†92B1V***		**32EUE†92W1V***		**32EUE†92F1V***		**32EUE†92N1V***	
10	15	25	25	2	—	50	13–52	B	**32FUF†92B1V***		**32FUF†92W1V***		**32FUF†92F1V***		**32FUF†92N1V***	
15	20	30	30	—	2½	100	25–100	B	**32GUG†92B1V***		**32GUG†92W1V***		**32GUG†92F1V***		**32GUG†92N1V***	
25	30	50	50	3	—	125	25–100	B	**32HUG†92B1V***		**32HUG†92W1V***		**32HUG†92F1V***		**32HUG†92N1V***	
30	40	75	75	—	3½	125	50–200	B	**32IUH†92B1V***		**32IUH†92W1V***		**32IUH†92F1V***		**32IUH†92N1V***	
40	50	100	100	4	—	150	50–200	B	**32JUH†92B1V***		**32JUH†92W1V***		**32JUH†92F1V***		**32JUH†92N1V***	

Note: All starter sizes carry one maximum Hp rating (per the National Electric Code).

① Dual voltage coils not available in modified starters.

② For conduit hubs and conversion instructions, see page 17-112.

③ If motor FLA are unknown, select overload on the basis that low speed FLA will be no greater than 50% of high speed FLA.

Combination Two Speed Heavy Duty Starters

MCP Type, Constant Horsepower with Solid State Overload, Class 32

Selection

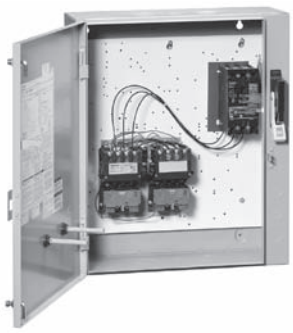

Ordering Information

- ► Replace the (*) with a letter from the coil table. Dual voltage coils are wired on high voltage unless specified on order.
- ► Replace the (†) with the letter that corresponds to the correct FLA in the High/Low Speed FLA table.③
- ► Field Modification Kits see page 17-106.
- ► Factory Modifications see page 17-121.
- ► Dimensions see page 17-168.
- ► Wiring Diagrams see page 17-180.
- ► Replacement Parts see page 17-133.

Coil Table

60Hz Voltage	Letter
24	J
120	F
110–120/220–240①	A
200–208	D
220–240	G
277	L
220–240/440–480①	C
440–480	H
575–600	E

For other voltages and frequencies see Factory Modifications page 17-121.

High/Low Speed FLA Table③

Size	FLA	OLR Frame Size	†
0,1	0.25–1	A	A
0,1	0.75–3.4	A	B
0,1	3–12	A1	C
0,1	5.5–22	A1	D
0-1 3/4	10–40	A1	E
2-3	13–52	B	F
2-3	25–100	B	G
3 1/2-4	50–200	B	H

* First (†) for high speed, second (†) for low speed. Use motor nameplate to select FLA. If motor FLA are unknown, select overload on the bases that the low speed FLA will be no greater than 50 % of high speed FLA.

One Winding Consequent Pole, 3-Phase (Constant Horsepower)

Max Hp							Overload		Enclosure							
									NEMA 1 General Purpose		NEMA 4/4X Stainless② Watertight, Dust-tight, Corrosion Resistant 304 Stainless Steel		NEMA 4X Fiberglass Watertight, Dust-tight Corrosion Resistant		NEMA 12, NEMA 3/3R②, NEMA 4 Painted Industrial Use Weatherproof Watertight, Dust-tight	
200 Volts	230 Volts	460 Volts	575 Volts	NEMA Size	Half Size	Motor Circuit Interruter ETI Amps	Amp Range	Frame Size	Catalog Number	List Price $	Catalog Number	List Price $	Catalog Number	List Price $	Catalog Number	List Price $
2	2	3	3	0	—	10	—	A or A1	**32CU††92B2H***		**32CU††92W2H***		**32CU††92F2H***		**32CU††92N2H***	
5	5	7½	7½	1	—	25	—	A or A1	**32DU††92B2H***		**32DU††92W2H***		**32DU††92F2H***		**32DU††92N2H***	
7½	7½	10	10	—	1¾	40	—	A1	**32EU††92B2H***		**32EU††92W2H***		**32EU††92F2H***		**32EU††92N2H***	
7½	10	20	20	2	—	50	—	B	**32FU††92B2H***		**32FU††92W2H***		**32FU††92F2H***		**32FU††92N2H***	
10	15	25	25	—	2½	100	—	B	**32GU††92B2H***		**32GU††92W2H***		**32GU††92F2H***		**32GU††92N2H***	
20	25	40	40	3	—	100	—	B	**32HU††92B2H***		**32HU††92W2H***		**32HU††92F2H***		**32HU††92N2H***	
25	30	50	50	—	3½	125	—	B	**32IU††92B2H***		**32IU††92W2H***		**32IU††92F2H***		**32IU††92N2H***	
30	40	75	75	4	—	150	—	B	**32JU††92B2H***		**32JU††92W2H***		**32JU††92F2H***		**32JU††92N2H***	

Two Separate Windings, 3-Phase (Constant Horsepower)

Max Hp							Overload		Enclosure							
									NEMA 1 General Purpose		NEMA 4/4X Stainless② Watertight, Dust-tight, Corrosion Resistant 304 Stainless Steel		NEMA 4X Fiberglass Watertight, Dust-tight Corrosion Resistant		NEMA 12, NEMA 3/3R②, NEMA 4 Painted Industrial Use Weatherproof Watertight, Dust-tight	
200 Volts	230 Volts	460 Volts	575 Volts	NEMA Size	Half Size	Motor Circuit Interruter ETI Amps	Amp Range	Frame Size	Catalog Number	List Price $	Catalog Number	List Price $	Catalog Number	List Price $	Catalog Number	List Price $
2	2	3	3	0	—	10	—	A or A1	**32CU††92B1H***		**32CU††92W1H***		**32CU††92F1H***		**32CU††92N1H***	
5	5	7½	7½	1	—	25	—	A or A1	**32DU††92B1H***		**32DU††92W1H***		**32DU††92F1H***		**32DU††92N1H***	
7½	7½	10	10	—	1¾	40	—	A1	**32EU††92B1H***		**32EU††92W1H***		**32EU††92F1H***		**32EU††92N1H***	
7½	10	20	20	2	—	50	—	B	**32FU††92B1H***		**32FU††92W1H***		**32FU††92F1H***		**32FU††92N1H***	
10	15	25	25	—	2½	100	—	B	**32GU††92B1H***		**32GU††92W1H***		**32GU††92F1H***		**32GU††92N1H***	
20	25	40	40	3	—	100	—	B	**32HU††92B1H***		**32HU††92W1H***		**32HU††92F1H***		**32HU††92N1H***	
25	30	50	50	—	3½	125	—	B	**32IU††92B1H***		**32IU††92W1H***		**32IU††92F1H***		**32IU††92N1H***	
30	40	75	75	4	—	150	—	B	**32JU††92B1H***		**32JU††92W1H***		**32JU††92F1H***		**32JU††92N1H***	

Note: All starter sizes carry one maximum Hp rating (per the National Electric Code).

① Dual voltage coils not available in modified starters.

② For conduit hubs and conversion instructions, see page 17-112.

③ First † for high speed, second † for low speed. Use motor nameplate information to select FLA. If motor FLA are unknown, select overload on the basis that low speed FLA will be no greater than 50% of high speed FLA.

Combination Two Speed Heavy Duty Starters

MCP Type, Constant or Variable Torque w/Ambient Compensated Bimetal Overload, Class 32

Selection

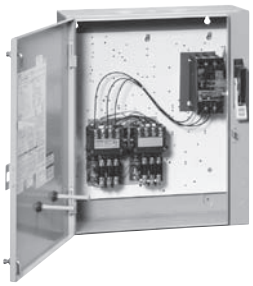

Ordering Information

- Replace the (*) with a letter from the coil table. Dual voltage coils are wired on high voltage unless specified on order.
- Heater elements see page 17-126. (6 Required)
- Field Modification Kits see page 17-106.
- Factory Modifications see page 17-121.
- Dimensions see page 17-168.
- Wiring Diagrams see page 17-180.
- Replacement Parts see page 17-133.
- For NO/NC SPDT contact on overload relay, replace "81" with "91". "81" indicates one NC contact..

Coil Table

60Hz Voltage	Letter
24	J
120	F
110–120/220–240①	A
200–208	D
220–240	G
277	L
220–240/440–480①	C
440–480	H
575–600	E

For other voltages and frequencies, see Factory Modifications page 17-121.

One Winding Consequent Pole, 3-Phase (Constant or Variable Torque)

Max Hp							Enclosure							
							NEMA 1 General Purpose		NEMA 4/4X Stainless② Watertight, Dust-tight Corrosion Resistant 304 Stainless Steel		NEMA 4X Fiberglass Watertight, Dust-tight Corrosion Resistant		NEMA 12, NEMA 3/3R② NEMA 4 Painted Industrial Use Weatherproof Watertight, Dust-tight	
200 Volts	230 Volts	460 Volts	575 Volts	NEMA Size	Half Size	Motor Circuit Interrupter ETI Amps	Catalog Number	List Price $	Catalog Number	List Price $	Catalog Number	List Price $	Catalog Number	List Price $
½	½	1	1	0	—	3	32CP92B2VA*81		32CP92W2VA*81		32CP92F2VA*81		32CP92N2VA*81	
1	1	3	3	0	—	10	32CP92B2VB*81		32CP92W2VB*81		32CP92F2VB*81		32CP92N2VB*81	
3	3	5	5	0	—	25	32CP92B2VC*81		32CP92W2VC*81		32CP92F2VC*81		32CP92N2VC*81	
1½	1½	1	1	1	—	3	32DP92B2VA*81		32DP92W2VA*81		32DP92F2VA*81		32DP92N2VA*81	
1	1	3	3	1	—	10	32DP92B2VB*81		32DP92W2VB*81		32DP92F2VB*81		32DP92N2VB*81	
3	3	7½	7½	1	—	25	32DP92B2VD*81		32DP92W2VD*81		32DP92F2VD*81		32DP92N2VD*81	
7½	7½	10	10	1	—	30	32DP92B2VE*81		32DP92W2VE*81		32DP92F2VE*81		32DP92N2VE*81	
—	—	15	15	—	1¾	40	32EP92B2VF*81		32EP92W2VF*81		32EP92F2VF*81		32EP92N2VF*81	
10	10	—	—	—	1¾	50	32EP92B2VG*81		32EP92W2VG*81		32EP92F2VG*81		32EP92N2VG*81	
—	—	20	20	2	—	40	32FP92B2VH*81		32FP92W2VH*81		32FP92F2VH*81		32FP92N2VH*81	
10	15	25	25	2	—	50	32FP92B2VJ*81		32FP92W2VJ*81		32FP92F2VJ*81		32FP92N2VJ*81	
10	15	30	30	—	2½	50	32GP92B2VK*81		32GP92W2VK*81		32GP92F2VK*81		32GP92N2VK*81	
15	20	—	—	—	2½	100	32GP92B2VL*81		32GP92W2VL*81		32GP92F2VL*81		32GP92N2VL*81	
—	—	30	30	3	—	50	32HP92B2VM*81		32HP92W2VM*81		32HP92F2VM*81		32HP92N2VM*81	
25	30	50	50	3	—	125	32HP92B2VN*81		32HP92W2VN*81		32HP92F2VN*81		32HP92N2VN*81	
30	40	75	75	—	3½	125	32IP92B2VP*81		32IP92W2VP*81		32IP92F2VP*81		32IP92N2VP*81	
40	50	100	100	4	—	150	32JP92B2VR*81		32JP92W2VR*81		32JP92F2VR*81		32JP92N2VR*81	

Two Separate Windings, 3-Phase (Constant or Variable Torque)

Max Hp							Enclosure							
							NEMA 1 General Purpose		NEMA 4/4X Stainless② Watertight, Dust-tight Corrosion Resistant 304 Stainless Steel		NEMA 4X Fiberglass Watertight, Dust-tight Corrosion Resistant		NEMA 12, NEMA 3/3R② NEMA 4 Painted Industrial Use Weatherproof Watertight, Dust-tight	
200 Volts	230 Volts	460 Volts	575 Volts	NEMA Size	Half Size	Motor Circuit Interrupter ETI Amps	Catalog Number	List Price $	Catalog Number	List Price $	Catalog Number	List Price $	CatalogNumber	List Price $
½	½	1	1	0	—	3	32CP92B1VA*81		32CP92W1VA*81		32CP92F1VA*81		32CP92N1VA*81	
1	1	3	3	0	—	10	32CP92B1VB*81		32CP92W1VB*81		32CP92F1VB*81		32CP92N1VB*81	
3	3	5	5	0	—	25	32CP92B1VC*81		32CP92W1VC*81		32CP92F1VC*81		32CP92N1VC*81	
½	½	1	1	1	—	3	32DP92B1VA*81		32DP92W1VA*81		32DP92F1VA*81		32DP92N1VA*81	
1	1	3	3	1	—	10	32DP92B1VB*81		32DP92W1VB*81		32DP92F1VB*81		32DP92N1VB*81	
3	3	7½	7½	1	—	25	32DP92B1VD*81		32DP92W1VD*81		32DP92F1VD*81		32DP92N1VD*81	
7½	7½	10	10	1	—	30	32DP92B1VE*81		32DP92W1VE*81		32DP92F1VE*81		32DP92N1VE*81	
—	—	15	15	—	1¾	40	32EP92B1VF*81		32EP92W1VF*81		32EP92F1VF*81		32EP92N1VF*81	
10	10	—	—	—	1¾	50	32EP92B1VG*81		32EP92W1VG*81		32EP92F1VG*81		32EP92N1VG*81	
—	—	20	20	2	—	40	32FP92B1VH*81		32FP92W1VH*81		32FP92F1VH*81		32FP92N1VH*81	
10	15	25	25	2	—	50	32FP92B1VJ*81		32FP92W1VJ*81		32FP92F1VJ*81		32FP92N1VJ*81	
10	15	30	30	—	2½	50	32GP92B1VK*81		32GP92W1VK*81		32GP92F1VK*81		32GP92N1VK*81	
15	20	—	—	—	2½	100	32GP92B1VL*81		32GP92W1VL*81		32GP92F1VL*81		32GP92N1VL*81	
—	—	30	30	3	—	50	32HP92B1VM*81		32HP92W1VM*81		32HP92F1VM*81		32HP92N1VM*81	
25	30	50	50	3	—	125	32HP92B1VN*81		32HP92W1VN*81		32HP92F1VN*81		32HP92N1VN*81	
30	40	75	75	—	3½	125	32IP92B1VP*81		32IP92W1VP*81		32IP92F1VP*81		32IP92N1VP*81	
40	50	100	100	4	—	150	32JP92B1VR*81		32JP92W1VR*81		32JP92F1VR*81		32JP92N1VR*81	

Note: Hp's shown above are based on the overload amp range for the FLA's (per the National Electric Code) of typical industrial motors. All starter sizes carry one maximum Hp rating.

① Dual voltage coils not available in modified starters.
② For conduit hubs and conversion instructions, see page 17-112.

Combination Two Speed Heavy Duty Starters

MCP, Constant Horsepower w/ Ambient Compensated Bimetal Overload, Class 32

Selection

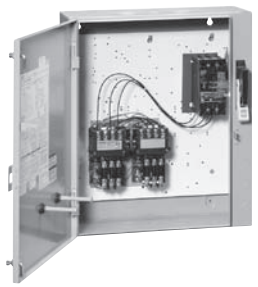

Ordering Information

- Replace the (*) with a letter from the coil table. Dual voltage coils are wired on high voltage unless specified on order.
- Heater elements see page 17-126. (6 Required)
- Field Modification Kits see page 17-106.
- Factory Modifications see page 17-121.
- Dimensions see page 17-168.
- Wiring Diagrams see page 17-180.
- Replacement Parts see page 17-133.
- For NO/NC SPDT contact on overload relay, replace "81" with "91". "81" indicates one NC contact..

Coil Table

60Hz Voltage	Letter
24	J
120	F
110–120/220–240①	A
200–208	D
220–240	G
277	L
220–240/440–480①	C
440–480	H
575–600	E

For other voltages and frequencies, see Factory Modifications page 17-121.

One Winding Consequent Pole, 3-Phase (Constant Horsepower)

Max Hp							Enclosure							
							NEMA 1 General Purpose		NEMA 4/4X Stainless② Watertight, Dust-tight Corrosion Resistant 304 Stainless Steel		NEMA 4X Fiberglass Watertight, Dust-tight Corrosion Resistant		NEMA 12, NEMA 3/3R② NEMA 4 Painted Industrial Use Weatherproof Watertight, Dust-tight	
200 Volts	230 Volts	460 Volts	575 Volts	NEMA Size	Half Size	Motor Circuit Interrupter ETI Amps	Catalog Number	List Price $	Catalog Number	List Price $	Catalog Number	List Price $	Catalog Number	List Price $
½	½	1	1	0	—	3	32CP92B2HA*81		32CP92W2HA*81		32CP92F2HA*81		32CP92N2HA*81	
1½	1½	3	3	0	—	10	32CP92B2HB*81		32CP92W2HB*81		32CP92F2HB*81		32CP92N2HB*81	
2	2	—	—	0	—	25	32CP92B2HC*81		32CP92W2HC*81		32CP92F2HC*81		32CP92N2HC*81	
½	½	1	1	1	—	3	32DP92B2HA*81		32DP92W2HA*81		32DP92F2HA*81		32DP92N2HA*81	
1½	1½	3	3	1	—	10	32DP92B2HB*81		32DP92W2HB*81		32DP92F2HB*81		32DP92N2HB*81	
3	3	7½	7½	1	—	25	32DP92B2HD*81		32DP92W2HD*81		32DP92F2HD*81		32DP92N2HD*81	
5	5	—	—	1	—	30	32DP92B2HE*81		32DP92W2HE*81		32DP92F2HE*81		32DP92N2HE*81	
—	—	10	10	—	1¾	40	32EP92B2HF*81		32EP92W2HF*81		32EP92F2HF*81		32EP92N2HF*81	
7½	7½	—	—	—	1¾	50	32EP92B2HG*81		32EP92W2HG*81		32EP92F2HG*81		32EP92N2HG*81	
—	7½	15	20	2	—	40	32FP92B2HH*81		32FP92W2HH*81		32FP92F2HH*81		32FP92N2HH*81	
7½	10	20	—	2	—	50	32FP92B2HJ*81		32FP92W2HJ*81		32FP92F2HJ*81		32FP92N2HJ*81	
—	—	30	30	—	2½	50	32GP92B2HK*81		32GP92W2HK*81		32GP92F2HK*81		32GP92N2HK*81	
10	15	30	40	3	—	50	32HP92B2HM*81		32HP92W2HM*81		32HP92F2HM*81		32HP92N2HM*81	
20	25	40	—	3	—	100	32HP92B2HN*81		32HP92W2HN*81		32HP92F2HN*81		32HP92N2HN*81	
25	30	50	50	—	3½	125	32IP92B2HP*81		32IP92W2HP*81		32IP92F2HP*81		32IP92N2HP*81	
30	40	75	75	4	—	150	32JP92B2HR*81		32JP92W2HR*81		32JP92F2HR*81		32JP92N2HR*81	

Two Separate Windings, 3-Phase (Constant Horsepower)

Max Hp							Enclosure							
							NEMA 1 General Purpose		NEMA 4/4X Stainless② Watertight, Dust-tight Corrosion Resistant 304 Stainless Steel		NEMA 4X Fiberglass Watertight, Dust-tight Corrosion Resistant		NEMA 12, NEMA 3/3R② NEMA 4 Painted Industrial Use Weatherproof Watertight, Dust-tight	
200 Volts	230 Volts	460 Volts	575 Volts	NEMA Size	Half Size	Motor Circuit Interrupter ETI Amps	Catalog Number	List Price $	Catalog Number	List Price $	Catalog Number	List Price $	Catalog Number	List Price $
½	½	1	1	0	—	3	32CP92B1HA*81		32CP92W1HA*81		32CP92F1HA*81		32CP92N1HA*81	
1½	1½	3	3	0	—	10	32CP92B1HB*81		32CP92W1HB*81		32CP92F1HB*81		32CP92N1HB*81	
2	2	—	—	0	—	25	32CP92B1HC*81		32CP92W1HC*81		32CP92F1HC*81		32CP92N1HC*81	
½	½	1	1	1	—	3	32DP92B1HA*81		32DP92W1HA*81		32DP92F1HA*81		32DP92N1HA*81	
1½	1½	3	3	1	—	10	32DP92B1HB*81		32DP92W1HB*81		32DP92F1HB*81		32DP92N1HB*81	
3	3	7½	7½	1	—	25	32DP92B1HD*81		32DP92W1HD*81		32DP92F1HD*81		32DP92N1HD*81	
5	5	—	—	1	—	30	32DP92B1HE*81		32DP92W1HE*81		32DP92F1HE*81		32DP92N1HE*81	
—	—	10	10	—	1¾	40	32EP92B1HF*81		32EP92W1HF*81		32EP92F1HF*81		32EP92N1HF*81	
7½	7½	—	—	—	1¾	50	32EP92B1HG*81		32EP92W1HG*81		32EP92F1HG*81		32EP92N1HG*81	
—	7½	15	20	2	—	40	32FP92B1HH*81		32FP92W1HH*81		32FP92F1HH*81		32FP92N1HH*81	
7½	10	20	—	2	—	50	32FP92B1HJ*81		32FP92W1HJ*81		32FP92F1HJ*81		32FP92N1HJ*81	
—	—	30	30	—	2½	50	32GP92B1HK*81		32GP92W1HK*81		32GP92F1HK*81		32GP92N1HK*81	
10	15	30	40	3	—	50	32HP92B1HM*81		32HP92W1HM*81		32HP92F1HM*81		32HP92N1HM*81	
20	25	40	—	3	—	100	32HP92B1HN*81		32HP92W1HN*81		32HP92F1HN*81		32HP92N1HN*81	
25	30	50	50	—	3½	125	32IP92B1HP*81		32IP92W1HP*81		32IP92F1HP*81		32IP92N1HP*81	
30	40	75	75	4	—	150	32JP92B1HR*81		32JP92W1HR*81		32JP92F1HR*81		32JP92N1HR*81	

Note: Hp's shown above are based on the overload amp range for the FLA's (per the National Electric Code) of typical industrial motors. All starter sizes carry one maximum Hp rating.

① Dual voltage coils not available in modified starters.
② For conduit hubs and conversion instructions, see page 17-112.

Reduced Voltage Heavy Duty Starters

Features and Benefits

General

Siemens manufactures the three commonly used electromechanical reduced voltage starters. Each one is designed for specific application requirements and consists of auto transformer, wye-delta and partwinding starters.

The reduced voltage starter:

- Reduces inrush current
- Provides smoother acceleration of the load
- Reduces starting torque
- Reduces stresses on mechanical linkages

Combination and non-combination reduced voltage starter sizes range from 0 to 6 including Siemens exclusive motormatched half-sizes. Enclosure types include 1, 3R/12, 4 painted and 4/4X stainless steel. UL listed file #E14900 (class 36); file #E185287 (class 37). CSA certified file #LR 6535 (class 36 & 37).

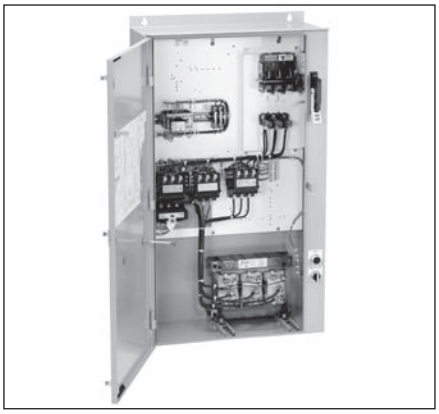

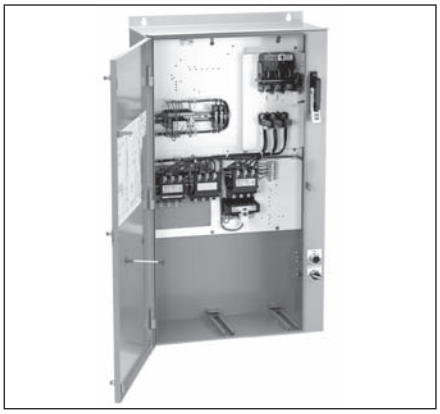

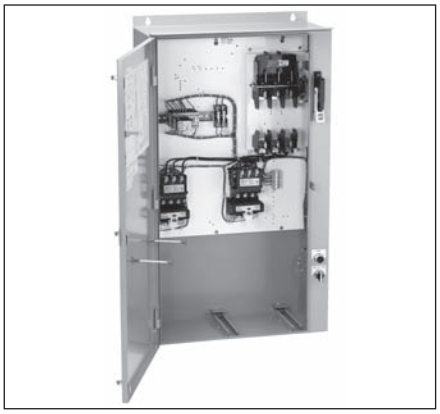

Auto Transformer Starter

- Maximum torque per amp
- Three coil auto transformer for balanced starting currents
- 50, 65 and 80% voltage taps
- Closed circuit transition
- Adjustable starting time
- Solid-state OLR overload as standard
- CPT supplied as standard
- Wide range of factory modifications

Wye-Delta Starter

- Lowest starting torque
- Closed or open circuit transition
- Adjustable starting time
- Solid-state OLR overload as standard
- CPT supplied as standard
- Wide range of factory modifications

Part-Winding Starter

- Simplest design – most economical
- Adjustable starting time
- Solid-state OLR overload as standard
- CPT supplied as standard
- Wide range of factory modifications

Various Methods of Electro-Mechanical Reduced Voltage Motor Starting —A General Comparison

Characteristic	Autotransformer 50% Tap	Autotransformer 65% Tap	Autotransformer 80% Tap	Part-Winding 2 step	Wye-Delta
Starting current drawn from line as % of that which would be drawn upon full voltage starting	25%	42%	64%	65%	33%
Starting current drawn by the motor	50%	65%	80%	65%	58%
Starting torque developed as % of that which would be developed on full voltage starting	25%	42%	64% Increases slightly with speed	40%	33%
Smoothness of acceleration	First in order of Smoothness			Third in order of Smoothness	Second in order of Smoothness
Allowable accelerating times (typical)	15 seconds at 200HP max. or 30 seconds on 200HP based on NEMA medium duty transformers			5 seconds max. Limited by motor design	5-60 seconds Limited by motor design
Starting current and torque and adjustments	Adjustable within limits of various taps			Fixed	Fixed

Ordering Information

- Field Modification Kits see page 17-106.
- Factory Modifications see page 17-121.
- Dimensions see page 17-169.
- Wiring Diagrams see page 17-183.
- Replacement Parts see page 17-133.

Coil and Control Voltage

The coil voltage will always match the motor voltage. As standard, a CPT is supplied and 120V control voltage is utilized. To change to 120V voltage (CPT not supplied), change the 9th character to "F". To change to 24VAC voltage (CPT not supplied), change the 9th character to "J".

NEMA 1 General Purpose Enclosures

			Overload Relay		Non-Combination		Combination Non-Fusible Disconnect			Combination Fusible Disconnect			Combination Circit Breaker		
Motor Voltage	Max Hp	NEMA Size (1/2 Size)	Amp Range	Frame Size	Catalog Number	List Price $	Disc. Amp Rating	Catalog Number	List Price $	Fuse Clip Amp/Volt Rating	Catalog Number	List Price $	Circuit Breaker Amps	Catalog Number	List Price $
200	10	(1¾)	10–40	A1	**36EUET6BD**		60	**37EUET6BDD**		60A/250V	**37EUET6BDF**		50	**37EUET6BDP**	
	10	2	13–52	B	**36FUFT6BD**		60	**37FUFT6BDD**		60A/250V	**37FUFT6BDF**		50	**37FUFT6BDP**	
	15	(2½)	25–100	B	**36GUGT6BD**		100	**37GUGT6BDD**		100A/250V	**37GUGT6BDF**		100	**37GUGT6BDP**	
	25	3	25–100	B	**36HUGT6BD**		100	**37HUGT6BDD**		100A/250V	**37HUGT6BDF**		100	**37HUGT6BDP**	
	30	(3½)	50–200	B	**36IUHT6BD**		200	**37IUHT6BDD**		200A/250V	**37IUHT6BDF**		125	**37IUHT6BDP**	
	40	4	50–200	B	**36JUHT6BD**		200	**37JUHT6BDD**		200A/250V	**37JUHT6BDF**		150	**37JUHT6BDP**	
	50	5	55–250	—	—		—	—		—	—		250	**37LPST6BDP**	
	75	5	55–250	—	**36LPUT6BD**		400	**37LPUT6BDD**		400A/250V	**37LPUT6BDF**		400	**37LPUT6BDP**	
	150	6	160–630	—	**36MPXT6BD**		600	**37MPXT6BDD**		600A/250V	**37MPXT6BDF**		600	**37MPXT6BDP**	
230	10	(1¾)	10–40	A1	**36EUET2BG**		60	**37EUET2BGD**		60A/250V	**37EUET2BGF**		50	**37EUET2BGP**	
	15	2	13–52	B	**36FUFT2BG**		60	**37FUFT2BGD**		60A/250V	**37FUFT2BGF**		50	**37FUFT2BGP**	
	20	(2½)	25–100	B	**36GUGT2BG**		100	**37GUGT2BGD**		100A/250V	**37GUGT2BGF**		100	**37GUGT2BGP**	
	30	3	25–100	B	**36HUGT2BG**		100	**37HUGT2BGD**		100A/250V	**37HUGT2BGF**		100	**37HUGT2BGP**	
	40	(3½)	50–200	B	**36IUHT2BG**		200	**37IUHT2BGD**		200A/250V	**37IUHT2BGF**		125	**37IUHT2BGP**	
	50	4	50–200	B	**36JUHT2BG**		200	**37JUHT2BGD**		200A/250V	**37JUHT2BGF**		150	**37JUHT2BGP**	
	75	5	55–250	—	—		—	—		—	—		250	**37LPST2BGP**	
	100	5	55–250	—	**36LPUT2BG**		400	**37LPUT2BGD**		400A/250V	**37LPUT2BGF**		400	**37LPUT2BGP**	
	200	6	160–630	—	**36MPXT2BG**		600	**37MPXT2BGD**		600A/250V	**37MPXT2BGF**		600	**37MPXT2BGP**	
460	15	(1¾)	10–40	A1	**36EUET4BH**		60	**37EUET4BHD**		60A/600V	**37EUET4BHF**		50	**37EUET4BHP**	
	25	2	13–52	B	**36FUFT4BH**		60	**37FUFT4BHD**		60A/600V	**37FUFT4BHF**		50	**37FUFT4BHP**	
	30	(2½)	13–52	B	**36GUGT4BH**		100	**37GUGT4BHD**		100A/600V	**37GUGT4BHF**		100	**37GUGT4BHP**	
	50	3	25–100	B	**36HUGT4BH**		100	**37HUGT4BHD**		100A/600V	**37HUGT4BHF**		100	**37HUGT4BHP**	
	75	(3½)	50–200	B	**36IUHT4BH**		200	**37IUHT4BHD**		200A/600V	**37IUHT4BHF**		125	**37IUHT4BHP**	
	100	4	50–200	B	**36JUHT4BH**		200	**37JUHT4BHD**		200A/600V	**37JUHT4BHF**		150	**37JUHT4BHP**	
	150	5	55–250	—	—		—	—		—	—		250	**37LPST4BHP**	
	200	5	55–250	—	**36LPUT4BH**		400	**37LPUT4BHD**		400A/600V	**37LPUT4BHF**		400	**37LPUT4BHP**	
	400	6	160–630	—	**36MPXT4BH**		600	**37MPXT4BHD**		600A/600V	**37MPXT4BHF**		600	**37MPXT4BHP**	
575	15	(1¾)	10–40	A1	**36EUET5BE**		60	**37EUET5BED**		60A/600V	**37EUET5BEF**		50	**37EUET5BEP**	
	25	2	13–52	B	**36FUFT5BE**		60	**37FUFT5BED**		60A/600V	**37FUFT5BEF**		50	**37FUFT5BEP**	
	30	(2½)	13–52	B	**36GUGT5BE**		100	**37GUGT5BED**		100A/600V	**37GUGT5BEF**		100	**37GUGT5BEP**	
	50	3	25–100	B	**36HUGT5BE**		100	**37HUGT5BED**		100A/600V	**37HUGT5BEF**		100	**37HUGT5BEP**	
	75	(3½)	50–200	B	**36IUHT5BE**		200	**37IUHT5BED**		200A/600V	**37IUHT5BEF**		125	**37IUHT5BEP**	
	100	4	50–200	B	**36JUHT5BE**		200	**37JUHT5BED**		200A/600V	**37JUHT5BEF**		150	**37JUHT5BEP**	
	150	5	55–250	—	—		—	—		—	—		250	**37LPST5BEP**	
	200	5	55–250	—	**36LPUT5BE**		400	**37LPUT5BED**		400A/600V	**37LPUT5BEF**		400	**37LPUT5BEP**	
	400	6	160–630	—	**36MPXT5BE**		600	**37MPXT5BED**		600A/600V	**37MPXT5BEF**		600	**37MPXT5BEP**	

Note: All starter sizes carry one maximum Hp rating (per the National Electric Code).

Ordering Information

- Field Modification Kits see page 17-106.
- Factory Modifications see page 17-121.
- Dimensions see page 17-169.
- Wiring Diagrams see page 17-183.
- Replacement Parts see page 17-133.

Coil and Control Voltage

The coil voltage will always match the motor voltage. As standard, a CPT is supplied and 120V control voltage is utilized. To change to 120V voltage (CPT not supplied), change the 9th character to "F". To change to 24VAC voltage (CPT not supplied), change the 9th character to "J".

NEMA 4 Painted Enclosures

			Overload Relay		Non-Combination		Combination Non-Fusible Disconnect			Combination Fusible Disconnect			Combination Circit Breaker		
Motor Voltage	Max Hp	NEMA Size (1/2 Size)	Amp Range	Frame Size	Catalog Number	List Price $	Disc. Amp Rating	Catalog Number	List Price $	Fuse Clip Amp/Volt Rating	Catalog Number	List Price $	Circuit Breaker Amps	Catalog Number	List Price $
200	10	(1¾)	10–40	A1	**36EUET6ED**		60	**37EUET6EDD**		60A/250V	**37EUET6EDF**		50	**37EUET6EDP**	
	10	2	13–52	B	**36FUFT6ED**		60	**37FUFT6EDD**		60A/250V	**37FUFT6EDF**		50	**37FUFT6EDP**	
	15	(2½)	25–100	B	**36GUGT6ED**		100	**37GUGT6EDD**		100A/250V	**37GUGT6EDF**		100	**37GUGT6EDP**	
	25	3	25–100	B	**36HUGT6ED**		100	**37HUGT6EDD**		100A/250V	**37HUGT6EDF**		100	**37HUGT6EDP**	
	30	(3½)	50–200	B	**36IUHT6ED**		200	**37IUHT6EDD**		200A/250V	**37IUHT6EDF**		125	**37IUHT6EDP**	
	40	4	50–200	B	**36JUHT6ED**		200	**37JUHT6EDD**		200A/250V	**37JUHT6EDF**		150	**37JUHT6EDP**	
	50	5	55–250	—	—		—	—		—	—		250	**37LPST6EDP**	
	75	5	55–250	—	**36LPUT6ED**		400	**37LPUT6EDD**		400A/250V	**37LPUT6EDF**		400	**37LPUT6EDP**	
	150	6	160–630	—	**36MPXT6ED**		600	**37MPXT6EDD**		600A/250V	**37MPXT6EDF**		600	**37MPXT6EDP**	
230	10	(1¾)	10–40	A1	**36EUET2EG**		60	**37EUET2EGD**		60A/250V	**37EUET2EGF**		50	**37EUET2EGP**	
	15	2	13–52	B	**36FUFT2EG**		60	**37FUFT2EGD**		60A/250V	**37FUFT2EGF**		50	**37FUFT2EGP**	
	20	(2½)	25–100	B	**36GUGT2EG**		100	**37GUGT2EGD**		100A/250V	**37GUGT2EGF**		100	**37GUGT2EGP**	
	30	3	25–100	B	**36HUGT2EG**		100	**37HUGT2EGD**		100A/250V	**37HUGT2EGF**		100	**37HUGT2EGP**	
	40	(3½)	50–200	B	**36IUHT2EG**		200	**37IUHT2EGD**		200A/250V	**37IUHT2EGF**		125	**37IUHT2EGP**	
	50	4	50–200	B	**36JUHT2EG**		200	**37JUHT2EGD**		200A/250V	**37JUHT2EGF**		150	**37JUHT2EGP**	
	75	5	55–250	—	—		—	—		—	—		250	**37LPST2EGP**	
	100	5	55–250	—	**36LPUT2EG**		400	**37LPUT2EGD**		400A/250V	**37LPUT2EGF**		400	**37LPUT2EGP**	
	200	6	160–630	—	**36MPXT2EG**		600	**37MPXT2EGD**		600A/250V	**37MPXT2EGF**		600	**37MPXT2EGP**	
460	15	(1¾)	10–40	A1	**36EUET4EH**		60	**37EUET4EHD**		60A/600V	**37EUET4EHF**		50	**37EUET4EHP**	
	25	2	13–52	B	**36FUFT4EH**		60	**37FUFT4EHD**		60A/600V	**37FUFT4EHF**		50	**37FUFT4EHP**	
	30	(2½)	13–52	B	**36GUGT4EH**		100	**37GUGT4EHD**		100A/600V	**37GUGT4EHF**		100	**37GUGT4EHP**	
	50	3	25–100	B	**36HUGT4EH**		100	**37HUGT4EHD**		100A/600V	**37HUGT4EHF**		100	**37HUGT4EHP**	
	75	(3½)	50–200	B	**36IUHT4EH**		200	**37IUHT4EHD**		200A/600V	**37IUHT4EHF**		125	**37IUHT4EHP**	
	100	4	50–200	B	**36JUHT4EH**		200	**37JUHT4EHD**		200A/600V	**37JUHT4EHF**		150	**37JUHT4EHP**	
	150	5	55–250	—	—		—	—		—	—		250	**37LPST4EHP**	
	200	5	55–250	—	**36LPUT4EH**		400	**37LPUT4EHD**		400A/600V	**37LPUT4EHF**		400	**37LPUT4EHP**	
	400	6	160–630	—	**36MPXT4EH**		600	**37MPXT4EHD**		600A/600V	**37MPXT4EHF**		600	**37MPXT4EHP**	
575	15	(1¾)	10–40	A1	**36EUET5EE**		60	**37EUET5EED**		60A/600V	**37EUET5EEF**		50	**37EUET5EEP**	
	25	2	13–52	B	**36FUFT5EE**		60	**37FUFT5EED**		60A/600V	**37FUFT5EEF**		50	**37FUFT5EEP**	
	30	(2½)	13–52	B	**36GUGT5EE**		100	**37GUGT5EED**		100A/600V	**37GUGT5EEF**		100	**37GUGT5EEP**	
	50	3	25–100	B	**36HUGT5EE**		100	**37HUGT5EED**		100A/600V	**37HUGT5EEF**		100	**37HUGT5EEP**	
	75	(3½)	50–200	B	**36IUHT5EE**		200	**37IUHT5EED**		200A/600V	**37IUHT5EEF**		125	**37IUHT5EEP**	
	100	4	50–200	B	**36JUHT5EE**		200	**37JUHT5EED**		200A/600V	**37JUHT5EEF**		150	**37JUHT5EEP**	
	150	5	55–250	—	—		—	—		—	—		250	**37LPST5EEP**	
	200	5	55–250	—	**36LPUT5EE**		400	**37LPUT5EED**		400A/600V	**37LPUT5EEF**		400	**37LPUT5EEP**	
	400	6	160–630	—	**36MPXT5EE**		600	**37MPXT5EED**		600A/600V	**37MPXT5EEF**		600	**37MPXT5EEP**	

Note: All starter sizes carry one maximum Hp rating (per the National Electric Code).

Ordering Information

- Field Modification Kits see page 17-106.
- Factory Modifications see page 17-121.
- Dimensions see page 17-169.
- Wiring Diagrams see page 17-183.
- Replacement Parts see page 17-133.

Coil and Control Voltage

The coil voltage will always match the motor voltage. As standard, a CPT is supplied and 120V control voltage is utilized. To change to 120V voltage (CPT not supplied), change the 9th character to "F". To change to 24VAC voltage (CPT not supplied), change the 9th character to "J".

NEMA 4/4X Stainless Steel Enclosures

			Overload Relay		Non-Combination		Combination Non-Fusible Disconnect			Combination Fusible Disconnect			Combination Circit Breaker		
Motor Voltage	Max Hp	NEMA Size (1/2 Size)	Amp Range	Frame Size	Catalog Number	List Price $	Disc. Amp Rating	Catalog Number	List Price $	Fuse Clip Amp/Volt Rating	Catalog Number	List Price $	Circuit Breaker Amps	Catalog Number	List Price $
200	10	(1¾)	10–40	A1	**36EUET6WD**		60	**37EUET6WDD**		60A/250V	**37EUET6WDF**		50	**37EUET6WDP**	
	10	2	13–52	B	**36FUFT6WD**		60	**37FUFT6WDD**		60A/250V	**37FUFT6WDF**		50	**37FUFT6WDP**	
	15	(2½)	25–100	B	**36GUGT6WD**		100	**37GUGT6WDD**		100A/250V	**37GUGT6WDF**		100	**37GUGT6WDP**	
	25	3	25–100	B	**36HUGT6WD**		100	**37HUGT6WDD**		100A/250V	**37HUGT6WDF**		100	**37HUGT6WDP**	
	30	(3½)	50–200	B	**36IUHT6WD**		200	**37IUHT6WDD**		200A/250V	**37IUHT6WDF**		125	**37IUHT6WDP**	
	40	4	50–200	B	**36JUHT6WD**		200	**37JUHT6WDD**		200A/250V	**37JUHT6WDF**		150	**37JUHT6WDP**	
230	10	(1¾)	10–40	A1	**36EUET2WG**		60	**37EUET2WGD**		60A/250V	**37EUET2WGF**		50	**37EUET2WGP**	
	15	2	13–52	B	**36FUFT2WG**		60	**37FUFT2WGD**		60A/250V	**37FUFT2WGF**		50	**37FUFT2WGP**	
	20	(2½)	25–100	B	**36GUGT2WG**		100	**37GUGT2WGD**		100A/250V	**37GUGT2WGF**		100	**37GUGT2WGP**	
	30	3	25–100	B	**36HUGT2WG**		100	**37HUGT2WGD**		100A/250V	**37HUGT2WGF**		100	**37HUGT2WGP**	
	40	(3½)	50–200	B	**36IUHT2WG**		200	**37IUHT2WGD**		200A/250V	**37IUHT2WGF**		125	**37IUHT2WGP**	
	50	4	50–200	B	**36JUHT2WG**		200	**37JUHT2WGD**		200A/250V	**37JUHT2WGF**		150	**37JUHT2WGP**	
460	15	(1¾)	10–40	A1	**36EUET4WH**		60	**37EUET4WHD**		60A/600V	**37EUET4WHF**		50	**37EUET4WHP**	
	25	2	13–52	B	**36FUFT4WH**		60	**37FUFT4WHD**		60A/600V	**37FUFT4WHF**		50	**37FUFT4WHP**	
	30	(2½)	13–52	B	**36GUGT4WH**		100	**37GUGT4WHD**		100A/600V	**37GUGT4WHF**		100	**37GUGT4WHP**	
	50	3	25–100	B	**36HUGT4WH**		100	**37HUGT4WHD**		100A/600V	**37HUGT4WHF**		100	**37HUGT4WHP**	
	75	(3½)	50–200	B	**36IUHT4WH**		200	**37IUHT4WHD**		200A/600V	**37IUHT4WHF**		125	**37IUHT4WHP**	
	100	4	50–200	B	**36JUHT4WH**		200	**37JUHT4WHD**		200A/600V	**37JUHT4WHF**		150	**37JUHT4WHP**	
575	15	(1¾)	10–40	A1	**36EUET5WE**		60	**37EUET5WED**		60A/600V	**37EUET5WEF**		50	**37EUET5WEP**	
	25	2	13–52	B	**36FUFT5WE**		60	**37FUFT5WED**		60A/600V	**37FUFT5WEF**		50	**37FUFT5WEP**	
	30	(2½)	13–52	B	**36GUGT5WE**		100	**37GUGT5WED**		100A/600V	**37GUGT5WEF**		100	**37GUGT5WEP**	
	50	3	25–100	B	**36HUGT5WE**		100	**37HUGT5WED**		100A/600V	**37HUGT5WEF**		100	**37HUGT5WEP**	
	75	(3½)	50–200	B	**36IUHT5WE**		200	**37IUHT5WED**		200A/600V	**37IUHT5WEF**		125	**37IUHT5WEP**	
	100	4	50–200	B	**36JUHT5WE**		200	**37JUHT5WED**		200A/600V	**37JUHT5WEF**		150	**37JUHT5WEP**	

Note: All starter sizes carry one maximum Hp rating (per the National Electric Code).

Ordering Information

- Field Modification Kits see page 17-106.
- Factory Modifications see page 17-121.
- Dimensions see page 17-169.
- Wiring Diagrams see page 17-183.
- Replacement Parts see page 17-133.

Coil and Control Voltage

The coil voltage will always match the motor voltage. As standard, a CPT is supplied and 120V control voltage is utilized. To change to 120V voltage (CPT not supplied), change the 9th character to "F". To change to 24VAC voltage (CPT not supplied), change the 9th character to "J".

NEMA 12 Enclosures (Supplied as NEMA 12, field convertible to 3/3R)①

			Overload Relay		Non-Combination		Combination Non-Fusible Disconnect			Combination Fusible Disconnect			Combination Circit Breaker		
Motor Voltage	Max Hp	NEMA Size (1/2 Size)	Amp Range	Frame Size	Catalog Number	List Price $	Disc. Amp Rating	Catalog Number	List Price $	Fuse Clip Amp/Volt Rating	Catalog Number	List Price $	Circuit Breaker Amps	Catalog Number	List Price $
200	10	(1¾)	10–40	A1	**36EUET6ND**		60	**37EUET6NDD**		60A/250V	**37EUET6NDF**		50	**37EUET6NDP**	
	10	2	13–52	B	**36FUFT6ND**		60	**37FUFT6NDD**		60A/250V	**37FUFT6NDF**		50	**37FUFT6NDP**	
	15	(2½)	25–100	B	**36GUGT6ND**		100	**37GUGT6NDD**		100A/250V	**37GUGT6NDF**		100	**37GUGT6NDP**	
	25	3	25–100	B	**36HUGT6ND**		100	**37HUGT6NDD**		100A/250V	**37HUGT6NDF**		100	**37HUGT6NDP**	
	30	(3½)	50–200	B	**36IUHT6ND**		200	**37IUHT6NDD**		200A/250V	**37IUHT6NDF**		125	**37IUHT6NDP**	
	40	4	50–200	B	**36JUHT6ND**		200	**37JUHT6NDD**		200A/250V	**37JUHT6NDF**		150	**37JUHT6NDP**	
	50	5	55–250	—	—		—	—		—	—		250	**37LPST6NDP**	
	75	5	55–250	—	**36LPUT6ND**		400	**37LPUT6NDD**		400A/250V	**37LPUT6NDF**		400	**37LPUT6NDP**	
	150	6	160–630	—	**36MPXT6ND**		600	**37MPXT6NDD**		600A/250V	**37MPXT6NDF**		600	**37MPXT6NDP**	
230	10	(1¾)	10–40	A1	**36EUET2NG**		60	**37EUET2NGD**		60A/250V	**37EUET2NGF**		50	**37EUET2NGP**	
	15	2	13–52	B	**36FUFT2NG**		60	**37FUFT2NGD**		60A/250V	**37FUFT2NGF**		50	**37FUFT2NGP**	
	20	(2½)	25–100	B	**36GUGT2NG**		100	**37GUGT2NGD**		100A/250V	**37GUGT2NGF**		100	**37GUGT2NGP**	
	30	3	25–100	B	**36HUGT2NG**		100	**37HUGT2NGD**		100A/250V	**37HUGT2NGF**		100	**37HUGT2NGP**	
	40	(3½)	50–200	B	**36IUHT2NG**		200	**37IUHT2NGD**		200A/250V	**37IUHT2NGF**		125	**37IUHT2NGP**	
	50	4	50–200	B	**36JUHT2NG**		200	**37JUHT2NGD**		200A/250V	**37JUHT2NGF**		150	**37JUHT2NGP**	
	75	5	55–250	—	—		—	—		—	—		250	**37LPST2NGP**	
	100	5	55–250	—	**36LPUT2NG**		400	**37LPUT2NGD**		400A/250V	**37LPUT2NGF**		400	**37LPUT2NGP**	
	200	6	160–630	—	**36MPXT2NG**		600	**37MPXT2NGD**		600A/250V	**37MPXT2NGF**		600	**37MPXT2NGP**	
460	15	(1¾)	10–40	A1	**36EUET4NH**		60	**37EUET4NHD**		60A/600V	**37EUET4NHF**		50	**37EUET4NHP**	
	25	2	13–52	B	**36FUFT4NH**		60	**37FUFT4NHD**		60A/600V	**37FUFT4NHF**		50	**37FUFT4NHP**	
	30	(2½)	13–52	B	**36GUGT4NH**		100	**37GUGT4NHD**		100A/600V	**37GUGT4NHF**		100	**37GUGT4NHP**	
	50	3	25–100	B	**36HUGT4NH**		100	**37HUGT4NHD**		100A/600V	**37HUGT4NHF**		100	**37HUGT4NHP**	
	75	(3½)	50–200	B	**36IUHT4NH**		200	**37IUHT4NHD**		200A/600V	**37IUHT4NHF**		125	**37IUHT4NHP**	
	100	4	50–200	B	**36JUHT4NH**		200	**37JUHT4NHD**		200A/600V	**37JUHT4NHF**		150	**37JUHT4NHP**	
	150	5	55–250	—	—		—	—		—	—		250	**37LPST4NHP**	
	200	5	55–250	—	**36LPUT4NH**		400	**37LPUT4NHD**		400A/600V	**37LPUT4NHF**		400	**37LPUT4NHP**	
	400	6	160–630	—	**36MPXT4NH**		600	**37MPXT4NHD**		600A/600V	**37MPXT4NHF**		600	**37MPXT4NHP**	
575	15	(1¾)	10–40	A1	**36EUET5NE**		60	**37EUET5NED**		60A/600V	**37EUET5NEF**		50	**37EUET5NEP**	
	25	2	13–52	B	**36FUFT5NE**		60	**37FUFT5NED**		60A/600V	**37FUFT5NEF**		50	**37FUFT5NEP**	
	30	(2½)	13–52	B	**36GUGT5NE**		100	**37GUGT5NED**		100A/600V	**37GUGT5NEF**		100	**37GUGT5NEP**	
	50	3	25–100	B	**36HUGT5NE**		100	**37HUGT5NED**		100A/600V	**37HUGT5NEF**		100	**37HUGT5NEP**	
	75	(3½)	50–200	B	**36IUHT5NE**		200	**37IUHT5NED**		200A/600V	**37IUHT5NEF**		125	**37IUHT5NEP**	
	100	4	50–200	B	**36JUHT5NE**		200	**37JUHT5NED**		200A/600V	**37JUHT5NEF**		150	**37JUHT5NEP**	
	150	5	55–250	—	—		—	—		—	—		250	**37LPST5NEP**	
	200	5	55–250	—	**36LPUT5NE**		400	**37LPUT5NED**		400A/600V	**37LPUT5NEF**		400	**37LPUT5NEP**	
	400	6	160–630	—	**36MPXT5NE**		600	**37MPXT5NED**		600A/600V	**37MPXT5NEF**		600	**37MPXT5NEP**	

Note: All starter sizes carry one maximum Hp rating (per the National Electric Code).

① See page 17-112 for conduit hubs and conversion instructions.

Ordering Information

- Field Modification Kits see page 17-106.
- Factory Modifications see page 17-121.
- Dimensions see page page 17-169.
- Wiring Diagrams see page 17-182.
- Replacement Parts see page 17-133.

Coil and Control Voltage

The coil voltage will always match the motor voltage. As standard, a CPT is supplied and 120V control voltage is utilized. To change to 120V voltage (CPT not supplied), change the 9th character to "F". To change to 24VAC voltage (CPT not supplied), change the 9th character to "J".

NEMA 1 General Purpose Enclosures

			Overload Relay		Non-Combination		Combination Non-Fusible Disconnect			Combination Fusible Disconnect			Combination Circit Breaker		
Motor Voltage	Max Hp	NEMA Size (1/2 Size)	Amp Range	Frame Size	Catalog Number	List Price $	Disc. Amp Rating	Catalog Number	List Price $	Fuse Clip Amp/Volt Rating	Catalog Number	List Price $	Circuit Breaker Amps	Catalog Number	List Price $
200	7½	0	5.5–22	A1	**36CUDP6BD**		60	**37CUDP6BDD**		60A/250V	**37CUDP6BDF**		30	**37CUDP6BDP**	
	10	1	5.5–22	A1	**36DUDP6BD**		60	**37DUDP6BDD**		60A/250V	**37DUDP6BDF**		50	**37DUDP6BDP**	
	15	(1¾)	10–40	A1	**36EUEP6BD**		100	**37EUEP6BDD**		100A/250V	**37EUEP6BDF**		100	**37EUEP6BDP**	
	20	2	13–52	B	**36FUFP6BD**		100	**37FUFP6BDD**		100A/250V	**37FUFP6BDF**		100	**37FUFP6BDP**	
	30	(2½)	25–100	B	**36GUGP6BD**		200	**37GUGP6BDD**		200A/250V	**37GUGP6BDF**		125	**37GUGP6BDP**	
	40	3	25–100	B	**36HUGP6BD**		200	**37HUGP6BDD**		200A/250V	**37HUGP6BDF**		150	**37HUGP6BDP**	
	50	(3½)	50–200	B	**36IUHP6BD**		200	**37IUHP6BDD**		200A/250V	**37IUHP6BDF**		250	**37IUHP6BDP**	
	75	4	50–200	B	**36JUHP6BD**		400	**37JUHP6BDD**		400A/250V	**37JUHP6BDF**		400	**37JUHP6BDP**	
	100	5	55–250	—	—		—	—		—	—		600	**37LPSP6BDP**	
	150	5	55–250	—	**36LPUP6BD**		600	**37LPUP6BDD**		600A/250V	**37LPUP6BDF**		600	**37LPUP6BDP**	
230	7½	0	5.5–22	A1	**36CUDP2BG**		60	**37CUDP2BGD**		60A/250V	**37CUDP2BGF**		30	**37CUDP2BGP**	
	10	1	5.5–22	A1	**36DUDP2BG**		60	**37DUDP2BGD**		60A/250V	**37DUDP2BGF**		50	**37DUDP2BGP**	
	20	(1½)	10–40	A1	**36EUEP2BG**		100	**37EUEP2BGD**		100A/250V	**37EUEP2BGF**		100	**37EUEP2BGP**	
	25	2	13–52	B	**36FUFP2BG**		100	**37FUFP2BGD**		100A/250V	**37FUFP2BGF**		100	**37FUFP2BGP**	
	30	(2½)	25–100	B	**36GUGP2BG**		200	**37GUGP2BGD**		200A/250V	**37GUGP2BGF**		100	**37GUGP2BGP**	
	50	3	25–100	B	**36HUGP2BG**		200	**37HUGP2BGD**		200A/250V	**37HUGP2BGF**		150	**37HUGP2BGP**	
	60	(3½)	50–200	B	**36IUHP2BG**		200	**37IUHP2BGD**		200A/250V	**37IUHP2BGF**		250	**37IUHP2BGP**	
	75	4	50–200	B	**36JUHP2BG**		400	**37JUHP2BGD**		400A/250V	**37JUHP2BGF**		250	**37JUHP2BGP**	
	125	5	55–250	—	—		—	—		—	—		400	**37LPSP2BGP**	
	150	5	55–250	—	**36LPUP2BG**		600	**37LPUP2BGD**		600A/250V	**37LPUP2BGF**		600	**37LPUP2BGP**	
	300	6	160–630	—	**36MPXP2BG**		1200	**37MPXP2BGD**		1200A/250V	**37MPXP2BGF**		1200	**37MPXP2BGP**	
460	10	0	5.5–22	A1	**36CUDP4BH**		30	**37CUDP4BHD**		30A/600V	**37CUDP4BHF**		30	**37CUDP4BHP**	
	15	1	5.5–22	A1	**36DUDP4BH**		60	**37DUDP4BHD**		60A/600V	**37DUDP4BHF**		30	**37DUDP4BHP**	
	30	(1¾)	10–40	A1	**36EUEP4BH**		60	**37EUEP4BHD**		60A/600V	**37EUEP4BHF**		50	**37EUEP4BHP**	
	40	2	13–52	B	**36FUFP4BH**		100	**37FUFP4BHD**		100A/600V	**37FUFP4BHF**		100	**37FUFP4BHP**	
	60	(2½)	25–100	B	**36GUGP4BH**		200	**37GUGP4BHD**		200A/600V	**37GUGP4BHF**		100	**37GUGP4BHP**	
	75	3	25–100	B	**36HUGP4BH**		200	**37HUGP4BHD**		200A/600V	**37HUGP4BHF**		125	**37HUGP4BHP**	
	100	(3½)	50–200	B	**36IUHP4BH**		200	**37IUHP4BHD**		200A/600V	**37IUHP4BHF**		150	**37IUHP4BHP**	
	150	4	50–200	B	**36JUHP4BH**		400	**37JUHP4BHD**		400A/600V	**37JUHP4BHF**		250	**37JUHP4BHP**	
	250	5	55–250	—	—		—	—		—	—		400	**37LPSP4BHP**	
	350	5	55–250	—	**36LPUP4BH**		600	**37LPUP4BHD**		600A/600V	**37LPUP4BHF**		600	**37LPUP4BHP**	
	600	6	160–630	—	**36MPXP4BH**		1200	**37MPXP4BHD**		1200A/600V	**37MPXP4BHF**		1200	**37MPXP4BHP**	
575	10	0	5.5–22	A1	**36CUDP5BE**		30	**37CUDP5BED**		30A/600V	**37CUDP5BEF**		30	**37CUDP5BEP**	
	15	1	5.5–22	A1	**36DUDP5BE**		60	**37DUDP5BED**		60A/600V	**37DUDP5BEF**		30	**37DUDP5BEP**	
	30	(1¾)	10–40	A1	**36EUEP5BE**		60	**37EUEP5BED**		60A/600V	**37EUEP5BEF**		50	**37EUEP5BEP**	
	40	2	13–52	B	**36FUFP5BE**		60	**37FUFP5BED**		60A/600V	**37FUFP5BEF**		50	**37FUFP5BEP**	
	60	(2½)	25–100	B	**36GUGP5BE**		100	**37GUGP5BED**		100A/600V	**37GUGP5BEF**		100	**37GUGP5BEP**	
	75	3	25–100	B	**36HUGP5BE**		200	**37HUGP5BED**		200A/600V	**37HUGP5BEF**		125	**37HUGP5BEP**	
	100	(3½)	50–200	B	**36IUHP5BE**		400	**37IUHP5BED**		400A/600V	**37IUHP5BEF**		150	**37IUHP5BEP**	
	150	4	50–200	B	**36JUHP5BE**		400	**37JUHP5BED**		400A/600V	**37JUHP5BEF**		250	**37JUHP5BEP**	
	250	5	55–250	—	—		—	—		400A/600V	**37LPSP5BEF**		—	—	
	350	5	55–250	—	**36LPUP5BE**		600	**37LPUP5BED**		600A/600V	**37LPUP5BEF**		400	**37LPUP5BEP**	
	600	6	160–630	—	**36MPXP5BE**		1200	**37MPXP5BED**		1200A/600V	**37MPXP5BEF**		1200	**37MPXP5BEP**	

Note: All starter sizes carry one maximum Hp rating (per the National Electric Code).

Ordering Information

- Field Modification Kits see page 17-106.
- Factory Modifications see page 17-121.
- Dimensions see page page 17-169.
- Wiring Diagrams see page 17-182.
- Replacement Parts see page 17-133.

Coil and Control Voltage

The coil voltage will always match the motor voltage. As standard, a CPT is supplied and 120V control voltage is utilized. To change to 120V voltage (CPT not supplied), change the 9th character to "F". To change to 24VAC voltage (CPT not supplied), change the 9th character to "J".

NEMA 4 Painted Enclosures

			Overload Relay		Non-Combination		Combination Non-Fusible Disconnect			Combination Fusible Disconnect			Combination Circit Breaker		
Motor Voltage	Max Hp	NEMA Size (1/2 Size)	Amp Range	Frame Size	Catalog Number	List Price $	Disc. Amp Rating	Catalog Number	List Price $	Fuse Clip Amp/Volt Rating	Catalog Number	List Price $	Circuit Breaker Amps	Catalog Number	List Price $
200	7½	0	5.5–22	A1	**36CUDP6ED**		60	**37CUDP6EDD**		60A/250V	**37CUDP6EDF**		30	**37CUDP6EDP**	
	10	1	5.5–22	A1	**36DUDP6ED**		60	**37DUDP6EDD**		60A/250V	**37DUDP6EDF**		50	**37DUDP6EDP**	
	15	(1¾)	10–40	A1	**36EUEP6ED**		100	**37EUEP6EDD**		100A/250V	**37EUEP6EDF**		100	**37EUEP6EDP**	
	20	2	13–52	B	**36FUFP6ED**		100	**37FUFP6EDD**		100A/250V	**37FUFP6EDF**		100	**37FUFP6EDP**	
	30	(2½)	25–100	B	**36GUGP6ED**		200	**37GUGP6EDD**		200A/250V	**37GUGP6EDF**		125	**37GUGP6EDP**	
	40	3	25–100	B	**36HUGP6ED**		200	**37HUGP6EDD**		200A/250V	**37HUGP6EDF**		150	**37HUGP6EDP**	
	50	(3½)	50–200	B	**36IUHP6ED**		200	**37IUHP6EDD**		200A/250V	**37IUHP6EDF**		250	**37IUHP6EDP**	
	75	4	50–200	B	**36JUHP6ED**		400	**37JUHP6EDD**		400A/250V	**37JUHP6EDF**		400	**37JUHP6EDP**	
	100	5	55–250	—	—		—	—		—	—		600	**37LPSP6EDP**	
	150	5	55–250	—	**36LPUP6ED**		600	**37LPUP6EDD**		600A/250V	**37LPUP6EDF**		600	**37LPUP6EDP**	
230	7½	0	5.5–22	A1	**36CUDP2EG**		60	**37CUDP2EGD**		60A/250V	**37CUDP2EGF**		30	**37CUDP2EGP**	
	10	1	5.5–22	A1	**36DUDP2EG**		60	**37DUDP2EGD**		60A/250V	**37DUDP2EGF**		50	**37DUDP2EGP**	
	20	(1½)	10–40	A1	**36EUEP2EG**		100	**37EUEP2EGD**		100A/250V	**37EUEP2EGF**		100	**37EUEP2EGP**	
	25	2	13–52	B	**36FUFP2EG**		100	**37FUFP2EGD**		100A/250V	**37FUFP2EGF**		100	**37FUFP2EGP**	
	30	(2½)	25–100	B	**36GUGP2EG**		200	**37GUGP2EGD**		200A/250V	**37GUGP2EGF**		100	**37GUGP2EGP**	
	50	3	25–100	B	**36HUGP2EG**		200	**37HUGP2EGD**		200A/250V	**37HUGP2EGF**		150	**37HUGP2EGP**	
	60	(3½)	50–200	B	**36IUHP2EG**		200	**37IUHP2EGD**		200A/250V	**37IUHP2EGF**		250	**37IUHP2EGP**	
	75	4	50–200	B	**36JUHP2EG**		400	**37JUHP2EGD**		400A/250V	**37JUHP2EGF**		250	**37JUHP2EGP**	
	125	5	55–250	—	—		—	—		—	—		400	**37LPSP2EGP**	
	150	5	55–250	—	**36LPUP2EG**		600	**37LPUP2EGD**		600A/250V	**37LPUP2EGF**		600	**37LPUP2EGP**	
	300	6	160–630	—	**36MPXP2EG**		1200	**37MPXP2EGD**		1200A/250V	**37MPXP2EGF**		1200	**37MPXP2EGP**	
460	10	0	5.5–22	A1	**36CUDP4EH**		30	**37CUDP4EHD**		30A/600V	**37CUDP4EHF**		30	**37CUDP4EHP**	
	15	1	5.5–22	A1	**36DUDP4EH**		60	**37DUDP4EHD**		60A/600V	**37DUDP4EHF**		30	**37DUDP4EHP**	
	30	(1¾)	10–40	A1	**36EUEP4EH**		60	**37EUEP4EHD**		60A/600V	**37EUEP4EHF**		50	**37EUEP4EHP**	
	40	2	13–52	B	**36FUFP4EH**		100	**37FUFP4EHD**		100A/600V	**37FUFP4EHF**		100	**37FUFP4EHP**	
	60	(2½)	25–100	B	**36GUGP4EH**		200	**37GUGP4EHD**		200A/600V	**37GUGP4EHF**		100	**37GUGP4EHP**	
	75	3	25–100	B	**36HUGP4EH**		200	**37HUGP4EHD**		200A/600V	**37HUGP4EHF**		125	**37HUGP4EHP**	
	100	(3½)	50–200	B	**36IUHP4EH**		200	**37IUHP4EHD**		200A/600V	**37IUHP4EHF**		150	**37IUHP4EHP**	
	150	4	50–200	B	**36JUHP4EH**		400	**37JUHP4EHD**		400A/600V	**37JUHP4EHF**		250	**37JUHP4EHP**	
	250	5	55–250	—	—		—	—		—	—		400	**37LPSP4EHP**	
	350	5	55–250	—	**36LPUP4EH**		600	**37LPUP4EHD**		600A/600V	**37LPUP4EHF**		600	**37LPUP4EHP**	
	600	6	160–630	—	**36MPXP4EH**		1200	**37MPXP4EHD**		1200A/600V	**37MPXP4EHF**		1200	**37MPXP4EHP**	
575	10	0	5.5–22	A1	**36CUDP5EE**		30	**37CUDP5EED**		30A/600V	**37CUDP5EEF**		30	**37CUDP5EEP**	
	15	1	5.5–22	A1	**36DUDP5EE**		60	**37DUDP5EED**		60A/600V	**37DUDP5EEF**		30	**37DUDP5EEP**	
	30	(1¾)	10–40	A1	**36EUEP5EE**		60	**37EUEP5EED**		60A/600V	**37EUEP5EEF**		50	**37EUEP5EEP**	
	40	2	13–52	B	**36FUFP5EE**		60	**37FUFP5EED**		60A/600V	**37FUFP5EEF**		50	**37FUFP5EEP**	
	60	(2½)	25–100	B	**36GUGP5EE**		100	**37GUGP5EED**		100A/600V	**37GUGP5EEF**		100	**37GUGP5EEP**	
	75	3	25–100	B	**36HUGP5EE**		200	**37HUGP5EED**		200A/600V	**37HUGP5EEF**		125	**37HUGP5EEP**	
	100	(3½)	50–200	B	**36IUHP5EE**		400	**37IUHP5EED**		400A/600V	**37IUHP5EEF**		150	**37IUHP5EEP**	
	150	4	50–200	B	**36JUHP5EE**		400	**37JUHP5EED**		400A/600V	**37JUHP5EEF**		250	**37JUHP5EEP**	
	250	5	55–250	—	—		—	—		400A/600V	**37LPSP5EEF**		—	—	
	350	5	55–250	—	**36LPUP5EE**		600	**37LPUP5EED**		600A/600V	**37LPUP5EEF**		400	**37LPUP5EEP**	
	600	6	160–630	—	**36MPXP5EE**		1200	**37MPXP5EED**		1200A/600V	**37MPXP5EEF**		1200	**37MPXP5EEP**	

Note: All starter sizes carry one maximum Hp rating (per the National Electric Code).

Ordering Information

- Field Modification Kits see page 17-106.
- Factory Modifications see page 17-121.
- Dimensions see page page 17-169.
- Wiring Diagrams see page 17-182.
- Replacement Parts see page 17-133.

Coil and Control Voltage

The coil voltage will always match the motor voltage. As standard, a CPT is supplied and 120V control voltage is utilized. To change to 120V voltage (CPT not supplied), change the 9th character to "F". To change to 24VAC voltage (CPT not supplied), change the 9th character to "J".

NEMA 4/4X Stainless Steel Enclosures

			Overload Relay		Non-Combination		Combination Non-Fusible Disconnect			Combination Fusible Disconnect		Combination Circit Breaker		
Motor Voltage	Max Hp	NEMA Size (1/2 Size)	Amp Range	Frame Size	Catalog Number	List Price $	Disc. Amp Rating	Catalog Number	List Price $	Fuse Clip Amp/Volt Rating	Catalog Number	Circuit Breaker Amps	Catalog Number	List Price $
200	7½	0	5.5–22	A1	**36CUDP6WD**		60	**37CUDP6WDD**		60A/250V	**37CUDP6WDF**	30	**37CUDP6WDP**	
	10	1	5.5–22	A1	**36DUDP6WD**		60	**37DUDP6WDD**		60A/250V	**37DUDP6WDF**	50	**37DUDP6WDP**	
	15	(1¾)	10–40	A1	**36EUEP6WD**		100	**37EUEP6WDD**		100A/250V	**37EUEP6WDF**	100	**37EUEP6WDP**	
	20	2	13–52	B	**36FUFP6WD**		100	**37FUFP6WDD**		100A/250V	**37FUFP6WDF**	100	**37FUFP6WDP**	
	30	(2½)	25–100	B	**36GUGP6WD**		200	**37GUGP6WDD**		200A/250V	**37GUGP6WDF**	125	**37GUGP6WDP**	
	40	3	25–100	B	**36HUGP6WD**		200	**37HUGP6WDD**		200A/250V	**37HUGP6WDF**	150	**37HUGP6WDP**	
	50	(3½)	50–200	B	**36IUHP6WD**		200	**37IUHP6WDD**		200A/250V	**37IUHP6WDF**	250	**37IUHP6WDP**	
	75	4	50–200	B	**36JUHP6WD**		400	**37JUHP6WDD**		400A/250V	**37JUHP6WDF**	400	**37JUHP6WDP**	
230	7½	0	5.5–22	A1	**36CUDP2WG**		60	**37CUDP2WGD**		60A/250V	**37CUDP2WGF**	30	**37CUDP2WGP**	
	10	1	5.5–22	A1	**36DUDP2WG**		60	**37DUDP2WGD**		60A/250V	**37DUDP2WGF**	50	**37DUDP2WGP**	
	20	(1½)	10–40	A1	**36EUEP2WG**		100	**37EUEP2WGD**		100A/250V	**37EUEP2WGF**	100	**37EUEP2WGP**	
	25	2	13–52	B	**36FUFP2WG**		100	**37FUFP2WGD**		100A/250V	**37FUFP2WGF**	100	**37FUFP2WGP**	
	30	(2½)	25–100	B	**36GUGP2WG**		200	**37GUGP2WGD**		200A/250V	**37GUGP2WGF**	100	**37GUGP2WGP**	
	50	3	25–100	B	**36HUGP2WG**		200	**37HUGP2WGD**		200A/250V	**37HUGP2WGF**	150	**37HUGP2WGP**	
	60	(3½)	50–200	B	**36IUHP2WG**		200	**37IUHP2WGD**		200A/250V	**37IUHP2WGF**	250	**37IUHP2WGP**	
	75	4	50–200	B	**36JUHP2WG**		400	**37JUHP2WGD**		400A/250V	**37JUHP2WGF**	250	**37JUHP2WGP**	
460	10	0	5.5–22	A1	**36CUDP4WH**		30	**37CUDP4WHD**		30A/600V	**37CUDP4WHF**	30	**37CUDP4WHP**	
	15	1	5.5–22	A1	**36DUDP4WH**		60	**37DUDP4WHD**		60A/600V	**37DUDP4WHF**	30	**37DUDP4WHP**	
	30	(1¾)	10–40	A1	**36EUEP4WH**		60	**37EUEP4WHD**		60A/600V	**37EUEP4WHF**	50	**37EUEP4WHP**	
	40	2	13–52	B	**36FUFP4WH**		100	**37FUFP4WHD**		100A/600V	**37FUFP4WHF**	100	**37FUFP4WHP**	
	60	(2½)	25–100	B	**36GUGP4WH**		200	**37GUGP4WHD**		200A/600V	**37GUGP4WHF**	100	**37GUGP4WHP**	
	75	3	25–100	B	**36HUGP4WH**		200	**37HUGP4WHD**		200A/600V	**37HUGP4WHF**	125	**37HUGP4WHP**	
	100	(3½)	50–200	B	**36IUHP4WH**		200	**37IUHP4WHD**		200A/600V	**37IUHP4WHF**	150	**37IUHP4WHP**	
	150	4	50–200	B	**36JUHP4WH**		400	**37JUHP4WHD**		400A/600V	**37JUHP4WHF**	250	**37JUHP4WHP**	
575	10	0	5.5–22	A1	**36CUDP5WE**		30	**37CUDP5WED**		30A/600V	**37CUDP5WEF**	30	**37CUDP5WEP**	
	15	1	5.5–22	A1	**36DUDP5WE**		60	**37DUDP5WED**		60A/600V	**37DUDP5WEF**	30	**37DUDP5WEP**	
	30	(1¾)	10–40	A1	**36EUEP5WE**		60	**37EUEP5WED**		60A/600V	**37EUEP5WEF**	50	**37EUEP5WEP**	
	40	2	13–52	B	**36FUFP5WE**		60	**37FUFP5WED**		60A/600V	**37FUFP5WEF**	50	**37FUFP5WEP**	
	60	(2½)	25–100	B	**36GUGP5WE**		100	**37GUGP5WED**		100A/600V	**37GUGP5WEF**	100	**37GUGP5WEP**	
	75	3	25–100	B	**36HUGP5WE**		200	**37HUGP5WED**		200A/600V	**37HUGP5WEF**	125	**37HUGP5WEP**	
	100	(3½)	50–200	B	**36IUHP5WE**		400	**37IUHP5WED**		400A/600V	**37IUHP5WEF**	150	**37IUHP5WEP**	
	150	4	50–200	B	**36JUHP5WE**		400	**37JUHP5WED**		400A/600V	**37JUHP5WEF**	250	**37JUHP5WEP**	

Note: All starter sizes carry one maximum Hp rating (per the National Electric Code).

Ordering Information

- Field Modification Kits see page 17-106.
- Factory Modifications see page 17-121.
- Dimensions see page page 17-169.
- Wiring Diagrams see page 17-182.
- Replacement Parts see page 17-133.

Coil and Control Voltage

The coil voltage will always match the motor voltage. As standard, a CPT is supplied and 120V control voltage is utilized. To change to 120V voltage (CPT not supplied), change the 9th character to "F". To change to 24VAC voltage (CPT not supplied), change the 9th character to "J".

NEMA 12 Enclosures (Supplied as NEMA 12, field convertible to 3/3R)①

			Overload Relay		Non-Combination		Combination Non-Fusible Disconnect			Call Combination Fusible Disconnect Call			Combination Circit Breaker		
Motor Voltage	Max Hp	NEMA Size (1/2 Size)	Amp Range	Frame Size	Catalog Number	List Price $	Disc. Amp Rating	Catalog Number	List Price $	Fuse Clip Amp/Volt Rating	Catalog Number	List Price $	Circuit Breaker Amps	Catalog Number	List Price $
200	7½	0	5.5–22	A1	**36CUDP6ND**		60	**37CUDP6NDD**		60A/250V	**37CUDP6NDF**		30	**37CUDP6NDP**	
	10	1	5.5–22	A1	**36DUDP6ND**		60	**37DUDP6NDD**		60A/250V	**37DUDP6NDF**		50	**37DUDP6NDP**	
	15	(1¾)	10–40	A1	**36EUEP6ND**		100	**37EUEP6NDD**		100A/250V	**37EUEP6NDF**		100	**37EUEP6NDP**	
	20	2	13–52	B	**36FUFP6ND**		100	**37FUFP6NDD**		100A/250V	**37FUFP6NDF**		100	**37FUFP6NDP**	
	30	(2½)	25–100	B	**36GUGP6ND**		200	**37GUGP6NDD**		200A/250V	**37GUGP6NDF**		125	**37GUGP6NDP**	
	40	3	25–100	B	**36HUGP6ND**		200	**37HUGP6NDD**		200A/250V	**37HUGP6NDF**		150	**37HUGP6NDP**	
	50	(3½)	50–200	B	**36IUHP6ND**		200	**37IUHP6NDD**		200A/250V	**37IUHP6NDF**		250	**37IUHP6NDP**	
	75	4	50–200	B	**36JUHP6ND**		400	**37JUHP6NDD**		400A/250V	**37JUHP6NDF**		400	**37JUHP6NDP**	
	100	5	55–250	—	—		—	—		—	—		600	**37LPSP6NDP**	
	150	5	55–250	—	**36LPUP6ND**		600	**37LPUP6NDD**		600A/250V	**37LPUP6NDF**		600	**37LPUP6NDP**	
230	7½	0	5.5–22	A1	**36CUDP2NG**		60	**37CUDP2NGD**		60A/250V	**37CUDP2NGF**		30	**37CUDP2NGP**	
	10	1	5.5–22	A1	**36DUDP2NG**		60	**37DUDP2NGD**		60A/250V	**37DUDP2NGF**		50	**37DUDP2NGP**	
	20	(1½)	10–40	A1	**36EUEP2NG**		100	**37EUEP2NGD**		100A/250V	**37EUEP2NGF**		100	**37EUEP2NGP**	
	25	2	13–52	B	**36FUFP2NG**		100	**37FUFP2NGD**		100A/250V	**37FUFP2NGF**		100	**37FUFP2NGP**	
	30	(2½)	25–100	B	**36GUGP2NG**		200	**37GUGP2NGD**		200A/250V	**37GUGP2NGF**		100	**37GUGP2NGP**	
	50	3	25–100	B	**36HUGP2NG**		200	**37HUGP2NGD**		200A/250V	**37HUGP2NGF**		150	**37HUGP2NGP**	
	60	(3½)	50–200	B	**36IUHP2NG**		200	**37IUHP2NGD**		200A/250V	**37IUHP2NGF**		250	**37IUHP2NGP**	
	75	4	50–200	B	**36JUHP2NG**		400	**37JUHP2NGD**		400A/250V	**37JUHP2NGF**		250	**37JUHP2NGP**	
	125	5	55–250	—	—		—	—		—	—		400	**37LPSP2NGP**	
	150	5	55–250	—	**36LPUP2NG**		600	**37LPUP2NGD**		600A/250V	**37LPUP2NGF**		600	**37LPUP2NGP**	
	300	6	160–630	—	**36MPXP2NG**		1200	**37MPXP2NGD**		1200A/250V	**37MPXP2NGF**		1200	**37MPXP2NGP**	
460	10	0	5.5–22	A1	**36CUDP4NH**		30	**37CUDP4NHD**		30A/600V	**37CUDP4NHF**		30	**37CUDP4NHP**	
	15	1	5.5–22	A1	**36DUDP4NH**		60	**37DUDP4NHD**		60A/600V	**37DUDP4NHF**		30	**37DUDP4NHP**	
	30	(1¾)	10–40	A1	**36EUEP4NH**		60	**37EUEP4NHD**		60A/600V	**37EUEP4NHF**		50	**37EUEP4NHP**	
	40	2	13–52	B	**36FUFP4NH**		100	**37FUFP4NHD**		100A/600V	**37FUFP4NHF**		100	**37FUFP4NHP**	
	60	(2½)	25–100	B	**36GUGP4NH**		200	**37GUGP4NHD**		200A/600V	**37GUGP4NHF**		100	**37GUGP4NHP**	
	75	3	25–100	B	**36HUGP4NH**		200	**37HUGP4NHD**		200A/600V	**37HUGP4NHF**		125	**37HUGP4NHP**	
	100	(3½)	50–200	B	**36IUHP4NH**		200	**37IUHP4NHD**		200A/600V	**37IUHP4NHF**		150	**37IUHP4NHP**	
	150	4	50–200	B	**36JUHP4NH**		400	**37JUHP4NHD**		400A/600V	**37JUHP4NHF**		250	**37JUHP4NHP**	
	250	5	55–250	—	—		—	—		—	—		400	**37LPSP4NHP**	
	350	5	55–250	—	**36LPUP4NH**		600	**37LPUP4NHD**		600A/600V	**37LPUP4NHF**		600	**37LPUP4NHP**	
	600	6	160–630	—	**36MPXP4NH**		1200	**37MPXP4NHD**		1200A/600V	**37MPXP4NHF**		1200	**37MPXP4NHP**	
575	10	0	5.5–22	A1	**36CUDP5NE**		30	**37CUDP5NED**		30A/600V	**37CUDP5NEF**		30	**37CUDP5NEP**	
	15	1	5.5–22	A1	**36DUDP5NE**		60	**37DUDP5NED**		60A/600V	**37DUDP5NEF**		30	**37DUDP5NEP**	
	30	(1¾)	10–40	A1	**36EUEP5NE**		60	**37EUEP5NED**		60A/600V	**37EUEP5NEF**		50	**37EUEP5NEP**	
	40	2	13–52	B	**36FUFP5NE**		60	**37FUFP5NED**		60A/600V	**37FUFP5NEF**		50	**37FUFP5NEP**	
	60	(2½)	25–100	B	**36GUGP5NE**		100	**37GUGP5NED**		100A/600V	**37GUGP5NEF**		100	**37GUGP5NEP**	
	75	3	25–100	B	**36HUGP5NE**		200	**37HUGP5NED**		200A/600V	**37HUGP5NEF**		125	**37HUGP5NEP**	
	100	(3½)	50–200	B	**36IUHP5NE**		400	**37IUHP5NED**		400A/600V	**37IUHP5NEF**		150	**37IUHP5NEP**	
	150	4	50–200	B	**36JUHP5NE**		400	**37JUHP5NED**		400A/600V	**37JUHP5NEF**		250	**37JUHP5NEP**	
	250	5	55–250	—	—		—	—		400A/600V	**37LPSP5NEF**		—	—	
	350	5	55–250	—	**36LPUP5NE**		600	**37LPUP5NED**		600A/600V	**37LPUP5NEF**		400	**37LPUP5NEP**	
	600	6	160–630	—	**36MPXP5NE**		1200	**37MPXP5NED**		1200A/600V	**37MPXP5NEF**		1200	**37MPXP5NEP**	

Note: All starter sizes carry one maximum Hp rating (per the National Electric Code).

① See page 17-112 for conduit hubs and conversion instructions.

Ordering Information

- Field Modification Kits see page 17-106.
- Factory Modifications see page 17-121.
- Dimensions see page 17-169.
- Wiring Diagrams see page 17-184 .
- Replacement Parts see page 17-133.

Coil and Control Voltage

The coil voltage will always match the motor voltage. As standard, a CPT is supplied and 120V control voltage is utilized. To change to 120V voltage (CPT not supplied), change the 9th character to "F". To change to 24VAC voltage (CPT not supplied), change the 9th character to "J".

NEMA 1 General Purpose Enclosures

			Overload Relay		Non-Combination		Combination Non-Fusible Disconnect			Combination Fusible Disconnect			Combination Circit Breaker		
Motor Voltage	Max Hp	NEMA Size (1/2 Size)	Amp Range	Frame Size	Catalog Number	List Price $	Disc. Amp Rating	Catalog Number	List Price $	Fuse Clip Amp/Volt Rating	Catalog Number	List Price $	Circuit Breaker Amps	Catalog Number	List Price $
200	10	1	10–40	A1	**36DUE06BD**		60	**37DUE06BDD**		60A/250V	**37DUE06BDF**		50	**37DUE06BDP**	
	15	(1¾)	10–40	A1	**36EUE06BD**		100	**37EUE06BDD**		100A/250V	**37EUE06BDF**		100	**37EUE06BDP**	
	20	2	13–52	B	**36FUF06BD**		100	**37FUF06BDD**		100A/250V	**37FUF06BDF**		100	**37FUF06BDP**	
	30	(2½)	25–100	B	**36GUG06BD**		200	**37GUG06BDD**		200A/250V	**37GUG06BDF**		125	**37GUG06BDP**	
	40	3	25–100	B	**36HUG06BD**		200	**37HUG06BDD**		200A/250V	**37HUG06BDF**		150	**37HUG06BDP**	
	50	(3½)	50–200	B	**36IUH06BD**		200	**37IUH06BDD**		200A/250V	**37IUH06BDF**		250	**37IUH06BDP**	
	60	4	50–200	B	**36JUH06BD**		400	**37JUH06BDD**		400A/250V	**37JUH06BDF**		250	**37JUH06BDP**	
	75	5	55–250	—	**36LPS06BD**		400	**37LPS06BDD**		400A/250V	**37LPS06BDF**		400	**37LPS06BDP**	
	150	5	55–250	—	**36LPU06BD**		600	**37LPU06BDD**		600A/250V	**37LPU06BDF**		600	**37LPU06BDP**	
	300	6	160–630	—	**36MPX06BD**		1200	**37MPX06BDD**		1200A/250V	**37MPX06BDF**		1200	**37MPX06BDP**	
230	10	1	10–40	A1	**36DUE02BG**		60	**37DUE02BGD**		60A/250V	**37DUE02BGF**		50	**37DUE02BGP**	
	15	(1¾)	10–40	A1	**36EUE02BG**		60	**37EUE02BGD**		60A/250V	**37EUE02BGF**		50	**37EUE02BGP**	
	25	2	13–52	B	**36FUF02BG**		100	**37FUF02BGD**		100A/250V	**37FUF02BGF**		100	**37FUF02BGP**	
	30	(2½)	25–100	B	**36GUG02BG**		200	**37GUG02BGD**		200A/250V	**37GUG02BGF**		100	**37GUG02BGP**	
	50	3	25–100	B	**36HUG02BG**		200	**37HUG02BGD**		200A/250V	**37HUG02BGF**		150	**37HUG02BGP**	
	60	(3½)	50–200	B	**36IUH02BG**		200	**37IUH02BGD**		200A/250V	**37IUH02BGF**		250	**37IUH02BGP**	
	75	4	50–200	B	**36JUH02BG**		400	**37JUH02BGD**		400A/250V	**37JUH02BGF**		250	**37JUH02BGP**	
	100	5	55–250	—	**36LPS02BG**		400	**37LPS02BGD**		400A/250V	**37LPS02BGF**		400	**37LPS02BGP**	
	150	5	55–250	—	**36LPU02BG**		600	**37LPU02BGD**		600A/250V	**37LPU02BGF**		600	**37LPU02BGP**	
	350	6	160–630	—	**36MPX02BG**		1200	**37MPX02BGD**		1200A/250V	**37MPX02BGF**		1200	**37MPX02BGP**	
460	15	1	5.5-22	A1	**36DUD04BH**		30	**37DUD04BHD**		30A/600V	**37DUD04BHF**		30	**37DUD04BHP**	
	30	(1¾)	10–40	A1	**36EUE04BH**		60	**37EUE04BHD**		60A/600V	**37EUE04BHF**		50	**37EUE04BHP**	
	40	2	13–52	B	**36FUF04BH**		100	**37FUF04BHD**		100A/600V	**37FUF04BHF**		100	**37FUF04BHP**	
	60	(2½)	25–100	B	**36GUG04BH**		200	**37GUG04BHD**		200A/600V	**37GUG04BHF**		100	**37GUG04BHP**	
	75	3	25–100	B	**36HUG04BH**		200	**37HUG04BHD**		200A/600V	**37HUG04BHF**		125	**37HUG04BHP**	
	100	(3½)	50–200	B	**36IUH04BH**		200	**37IUH04BHD**		200A/600V	**37IUH04BHF**		150	**37IUH04BHP**	
	150	4	50–200	B	**36JUH04BH**		400	**37JUH04BHD**		400A/600V	**37JUH04BHF**		250	**37JUH04BHP**	
	200	5	55–250	—	**36LPS04BH**		400	**37LPS04BHD**		400A/600V	**37LPS04BHF**		400	**37LPS04BHP**	
	300	5	55–250	—	**36LPU04BH**		600	**37LPU04BHD**		600A/600V	**37LPU04BHF**		600	**37LPU04BHP**	
	700	6	160–630	—	**36MPX04BH**		1600	**37MPX04BHD**		1600A/600V	**37MPX04BHF**		1200	**37MPX04BHP**	
575	15	1	5.5-22	A1	**36DUD05BE**		30	**37DUD05BED**		30A/600V	**37DUD05BEF**		30	**37DUD05BEP**	
	30	(1¾)	10–40	A1	**36EUE05BE**		60	**37EUE05BED**		60A/600V	**37EUE05BEF**		50	**37EUE05BEP**	
	40	2	13–52	B	**36FUF05BE**		100	**37FUF05BED**		100A/600V	**37FUF05BEF**		50	**37FUF05BEP**	
	60	(2½)	25–100	B	**36GUG05BE**		100	**37GUG05BED**		100A/600V	**37GUG05BEF**		100	**37GUG05BEP**	
	75	3	25–100	B	**36HUG05BE**		200	**37HUG05BED**		200A/600V	**37HUG05BEF**		125	**37HUG05BEP**	
	100	(3½)	50–200	B	**36IUH05BE**		200	**37IUH05BED**		200A/600V	**37IUH05BEF**		150	**37IUH05BEP**	
	150	4	50–200	B	**36JUH05BE**		400	**37JUH05BED**		400A/600V	**37JUH05BEF**		250	**37JUH05BEP**	
	200	5	55–250	—	**36LPS05BE**		400	**37LPS05BED**		400A/600V	**37LPS05BEF**		250	**37LPS05BEP**	
	300	5	55–250	—	**36LPU05BE**		600	**37LPU05BED**		600A/600V	**37LPU05BEF**		400	**37LPU05BEP**	
	700	6	160–630	—	**36MPX05BE**		1600	**37MPX05BED**		1600A/600V	**37MPX05BEF**		1600	**37MPX05BEP**	

Note: All starter sizes carry one maximum Hp rating (per the National Electric Code).

Ordering Information

- Field Modification Kits see page 17-106.
- Factory Modifications see page 17-121.
- Dimensions see page 17-169.
- Wiring Diagrams see page 17-184 .
- Replacement Parts see page 17-133.

Coil and Control Voltage

The coil voltage will always match the motor voltage. As standard, a CPT is supplied and 120V control voltage is utilized. To change to 120V voltage (CPT not supplied), change the 9th character to "F". To change to 24VAC voltage (CPT not supplied), change the 9th character to "J".

NEMA 4 Painted Enclosures

			Overload Relay		Non-Combination		Combination Non-Fusible Disconnect			Combination Fusible Disconnect			Combination Circit Breaker		
Motor Voltage	Max Hp	NEMA Size (1/2 Size)	Amp Range	Frame Size	Catalog Number	List Price $	Disc. Amp Rating	Catalog Number	List Price $	Fuse Clip Amp/Volt Rating	Catalog Number	List Price $	Circuit Breaker Amps	Catalog Number	List Price $
200	10	1	10–40	A1	**36DUE06ED**		60	**37DUE06EDD**		60A/250V	**37DUE06EDF**		50	**37DUE06EDP**	
	15	(1¾)	10–40	A1	**36EUE06ED**		100	**37EUE06EDD**		100A/250V	**37EUE06EDF**		100	**37EUE06EDP**	
	20	2	13–52	B	**36FUF06ED**		100	**37FUF06EDD**		100A/250V	**37FUF06EDF**		100	**37FUF06EDP**	
	30	(2½)	25–100	B	**36GUG06ED**		200	**37GUG06EDD**		200A/250V	**37GUG06EDF**		125	**37GUG06EDP**	
	40	3	25–100	B	**36HUG06ED**		200	**37HUG06EDD**		200A/250V	**37HUG06EDF**		150	**37HUG06EDP**	
	50	(3½)	50–200	B	**36IUH06ED**		200	**37IUH06EDD**		200A/250V	**37IUH06EDF**		250	**37IUH06EDP**	
	60	4	50–200	B	**36JUH06ED**		400	**37JUH06EDD**		400A/250V	**37JUH06EDF**		250	**37JUH06EDP**	
	75	5	55–250	—	**36LPS06ED**		400	**37LPS06EDD**		400A/250V	**37LPS06EDF**		400	**37LPS06EDP**	
	150	5	55–250	—	**36LPU06ED**		600	**37LPU06EDD**		600A/250V	**37LPU06EDF**		600	**37LPU06EDP**	
	300	6	160–630	—	**36MPX06ED**		1200	**37MPX06EDD**		1200A/250V	**37MPX06EDF**		1200	**37MPX06EDP**	
230	10	1	10–40	A1	**36DUE02EG**		60	**37DUE02EGD**		60A/250V	**37DUE02EGF**		50	**37DUE02EGP**	
	15	(1¾)	10–40	A1	**36EUE02EG**		60	**37EUE02EGD**		60A/250V	**37EUE02EGF**		50	**37EUE02EGP**	
	25	2	13–52	B	**36FUF02EG**		100	**37FUF02EGD**		100A/250V	**37FUF02EGF**		100	**37FUF02EGP**	
	30	(2½)	25–100	B	**36GUG02EG**		200	**37GUG02EGD**		200A/250V	**37GUG02EGF**		100	**37GUG02EGP**	
	50	3	25–100	B	**36HUG02EG**		200	**37HUG02EGD**		200A/250V	**37HUG02EGF**		150	**37HUG02EGP**	
	60	(3½)	50–200	B	**36IUH02EG**		200	**37IUH02EGD**		200A/250V	**37IUH02EGF**		250	**37IUH02EGP**	
	75	4	50–200	B	**36JUH02EG**		400	**37JUH02EGD**		400A/250V	**37JUH02EGF**		250	**37JUH02EGP**	
	100	5	55–250	—	**36LPS02EG**		400	**37LPS02EGD**		400A/250V	**37LPS02EGF**		400	**37LPS02EGP**	
	150	5	55–250	—	**36LPU02EG**		600	**37LPU02EGD**		600A/250V	**37LPU02EGF**		600	**37LPU02EGP**	
	350	6	160–630	—	**36MPX02EG**		1200	**37MPX02EGD**		1200A/250V	**37MPX02EGF**		1200	**37MPX02EGP**	
460	15	1	5.5-22	A1	**36DUD04EH**		30	**37DUD04EHD**		30A/600V	**37DUD04EHF**		30	**37DUD04EHP**	
	30	(1¾)	10–40	A1	**36EUE04EH**		60	**37EUE04EHD**		60A/600V	**37EUE04EHF**		50	**37EUE04EHP**	
	40	2	13–52	B	**36FUF04EH**		100	**37FUF04EHD**		100A/600V	**37FUF04EHF**		100	**37FUF04EHP**	
	60	(2½)	25–100	B	**36GUG04EH**		200	**37GUG04EHD**		200A/600V	**37GUG04EHF**		100	**37GUG04EHP**	
	75	3	25–100	B	**36HUG04EH**		200	**37HUG04EHD**		200A/600V	**37HUG04EHF**		125	**37HUG04EHP**	
	100	(3½)	50–200	B	**36IUH04EH**		200	**37IUH04EHD**		200A/600V	**37IUH04EHF**		150	**37IUH04EHP**	
	150	4	50–200	B	**36JUH04EH**		400	**37JUH04EHD**		400A/600V	**37JUH04EHF**		250	**37JUH04EHP**	
	200	5	55–250	—	**36LPS04EH**		400	**37LPS04EHD**		400A/600V	**37LPS04EHF**		400	**37LPS04EHP**	
	300	5	55–250	—	**36LPU04EH**		600	**37LPU04EHD**		600A/600V	**37LPU04EHF**		600	**37LPU04EHP**	
	700	6	160–630	—	**36MPX04EH**		1600	**37MPX04EHD**		1600A/600V	**37MPX04EHF**		1200	**37MPX04EHP**	
575	15	1	5.5-22	A1	**36DUD05EE**		30	**37DUD05EED**		30A/600V	**37DUD05EEF**		30	**37DUD05EEP**	
	30	(1¾)	10–40	A1	**36EUE05EE**		60	**37EUE05EED**		60A/600V	**37EUE05EEF**		50	**37EUE05EEP**	
	40	2	13–52	B	**36FUF05EE**		100	**37FUF05EED**		100A/600V	**37FUF05EEF**		50	**37FUF05EEP**	
	60	(2½)	25–100	B	**36GUG05EE**		100	**37GUG05EED**		100A/600V	**37GUG05EEF**		100	**37GUG05EEP**	
	75	3	25–100	B	**36HUG05EE**		200	**37HUG05EED**		200A/600V	**37HUG05EEF**		125	**37HUG05EEP**	
	100	(3½)	50–200	B	**36IUH05EE**		200	**37IUH05EED**		200A/600V	**37IUH05EEF**		150	**37IUH05EEP**	
	150	4	50–200	B	**36JUH05EE**		400	**37JUH05EED**		400A/600V	**37JUH05EEF**		250	**37JUH05EEP**	
	200	5	55–250	—	**36LPS05EE**		400	**37LPS05EED**		400A/600V	**37LPS05EEF**		250	**37LPS05EEP**	
	300	5	55–250	—	**36LPU05EE**		600	**37LPU05EED**		600A/600V	**37LPU05EEF**		400	**37LPU05EEP**	
	700	6	160–630	—	**37MPX05EF**		1600	**37MPX05EED**		1600A/600V	**37MPX05EEF**		1600	**37MPX05EEP**	

Note: All starter sizes carry one maximum Hp rating (per the National Electric Code).

Ordering Information

- Field Modification Kits see page 17-106.
- Factory Modifications see page 17-121.
- Dimensions see page 17-169.
- Wiring Diagrams see page 17-184 .
- Replacement Parts see page 17-133.

Coil and Control Voltage

The coil voltage will always match the motor voltage. As standard, a CPT is supplied and 120V control voltage is utilized. To change to 120V voltage (CPT not supplied), change the 9th character to "F". To change to 24VAC voltage (CPT not supplied), change the 9th character to "J".

NEMA 4/4X Stainless Steel Enclosures

			Overload Relay		Non-Combination		Combination Non-Fusible Disconnect			Combination Fusible Disconnect			Combination Circit Breaker		
Motor Voltage	Max Hp	NEMA Size (1/2 Size)	Amp Range	Frame Size	Catalog Number	List Price $	Disc. Amp Rating	Catalog Number	List Price $	Fuse Clip Amp/Volt Rating	Catalog Number	List Price $	Circuit Breaker Amps	Catalog Number	List Price $
200	10	1	10–40	A1	**36DUE06WD**		60	**37DUE06WDD**		60A/250V	**37DUE06WDF**		50	**37DUE06WDP**	
	15	(1¾)	10–40	A1	**36EUE06WD**		100	**37EUE06WDD**		100A/250V	**37EUE06WDF**		100	**37EUE06WDP**	
	20	2	13–52	B	**36FUF06WD**		100	**37FUF06WDD**		100A/250V	**37FUF06WDF**		100	**37FUF06WDP**	
	30	(2½)	25–100	B	**36GUG06WD**		200	**37GUG06WDD**		200A/250V	**37GUG06WDF**		125	**37GUG06WDP**	
	40	3	25–100	B	**36HUG06WD**		200	**37HUG06WDD**		200A/250V	**37HUG06WDF**		150	**37HUG06WDP**	
	50	(3½)	50–200	B	**36IUH06WD**		200	**37IUH06WDD**		200A/250V	**37IUH06WDF**		250	**37IUH06WDP**	
	60	4	50–200	B	**36JUH06WD**		400	**37JUH06WDD**		400A/250V	**37JUH06WDF**		250	**37JUH06WDP**	
230	10	1	10–40	A1	**36DUE02WG**		60	**37DUE02WGD**		60A/250V	**37DUE02WGF**		50	**37DUE02WGP**	
	15	(1¾)	10–40	A1	**36EUE02WG**		60	**37EUE02WGD**		60A/250V	**37EUE02WGF**		50	**37EUE02WGP**	
	25	2	13–52	B	**36FUF02WG**		100	**37FUF02WGD**		100A/250V	**37FUF02WGF**		100	**37FUF02WGP**	
	30	(2½)	25–100	B	**36GUG02WG**		200	**37GUG02WGD**		200A/250V	**37GUG02WGF**		100	**37GUG02WGP**	
	50	3	25–100	B	**36HUG02WG**		200	**37HUG02WGD**		200A/250V	**37HUG02WGF**		150	**37HUG02WGP**	
	60	(3½)	50–200	B	**36IUH02WG**		200	**37IUH02WGD**		200A/250V	**37IUH02WGF**		250	**37IUH02WGP**	
	75	4	50–200	B	**36JUH02WG**		400	**37JUH02WGD**		400A/250V	**37JUH02WGF**		250	**37JUH02WGP**	
460	15	1	5.5-22	A1	**36DUD04WH**		30	**37DUD04WHD**		30A/600V	**37DUD04WHF**		30	**37DUD04WHP**	
	30	(1¾)	10–40	A1	**36EUE04WH**		60	**37EUE04WHD**		60A/600V	**37EUE04WHF**		50	**37EUE04WHP**	
	40	2	13–52	B	**36FUF04WH**		100	**37FUF04WHD**		100A/600V	**37FUF04WHF**		100	**37FUF04WHP**	
	60	(2½)	25–100	B	**36GUG04WH**		200	**37GUG04WHD**		200A/600V	**37GUG04WHF**		100	**37GUG04WHP**	
	75	3	25–100	B	**36HUG04WH**		200	**37HUG04WHD**		200A/600V	**37HUG04WHF**		125	**37HUG04WHP**	
	100	(3½)	50–200	B	**36IUH04WH**		200	**37IUH04WHD**		200A/600V	**37IUH04WHF**		150	**37IUH04WHP**	
	150	4	50–200	B	**36JUH04WH**		400	**37JUH04WHD**		400A/600V	**37JUH04WHF**		250	**37JUH04WHP**	
575	15	1	5.5-22	A1	**36DUD05WE**		30	**37DUD05WED**		30A/600V	**37DUD05WEF**		30	**37DUD05WEP**	
	30	(1¾)	10–40	A1	**36EUE05WE**		60	**37EUE05WED**		60A/600V	**37EUE05WEF**		50	**37EUE05WEP**	
	40	2	13–52	B	**36FUF05WE**		100	**37FUF05WED**		100A/600V	**37FUF05WEF**		50	**37FUF05WEP**	
	60	(2½)	25–100	B	**36GUG05WE**		100	**37GUG05WED**		100A/600V	**37GUG05WEF**		100	**37GUG05WEP**	
	75	3	25–100	B	**36HUG05WE**		200	**37HUG05WED**		200A/600V	**37HUG05WEF**		125	**37HUG05WEP**	
	100	(3½)	50–200	B	**36IUH05WE**		200	**37IUH05WED**		200A/600V	**37IUH05WEF**		150	**37IUH05WEP**	
	150	4	50–200	B	**36JUH05WE**		400	**37JUH05WED**		400A/600V	**37JUH05WEF**		250	**37JUH05WEP**	

Note: All starter sizes carry one maximum Hp rating (per the National Electric Code).

Ordering Information

- Field Modification Kits see page 17-106.
- Factory Modifications see page 17-121.
- Dimensions see page 17-169.
- Wiring Diagrams see page 17-184 .
- Replacement Parts see page 17-133.

Coil and Control Voltage

The coil voltage will always match the motor voltage. As standard, a CPT is supplied and 120V control voltage is utilized. To change to 120V voltage (CPT not supplied), change the 9th character to "F". To change to 24VAC voltage (CPT not supplied), change the 9th character to "J".

NEMA 12 Enclosures (Supplied as NEMA 12, field convertible to 3/3R)①

			Overload Relay		Non-Combination		Combination Non-Fusible Disconnect			Combination Fusible Disconnect			Combination Circit Breaker		
Motor Voltage	Max Hp	NEMA Size (1/2 Size)	Amp Range	Frame Size	Catalog Number	List Price $	Disc. Amp Rating	Catalog Number	List Price $	Fuse Clip Amp/Volt Rating	Catalog Number	List Price $	Circuit Breaker Amps	Catalog Number	List Price $
200	10	1	10–40	A1	**36DUE06ND**		60	**37DUE06NDD**		60A/250V	**37DUE06NDF**		50	**37DUE06NDP**	
	15	(1¾)	10–40	A1	**36EUE06ND**		100	**37EUE06NDD**		100A/250V	**37EUE06NDF**		100	**37EUE06NDP**	
	20	2	13–52	B	**36FUF06ND**		100	**37FUF06NDD**		100A/250V	**37FUF06NDF**		100	**37FUF06NDP**	
	30	(2½)	25–100	B	**36GUG06ND**		200	**37GUG06NDD**		200A/250V	**37GUG06NDF**		125	**37GUG06NDP**	
	40	3	25–100	B	**36HUG06ND**		200	**37HUG06NDD**		200A/250V	**37HUG06NDF**		150	**37HUG06NDP**	
	50	(3½)	50–200	B	**36IUH06ND**		200	**37IUH06NDD**		200A/250V	**37IUH06NDF**		250	**37IUH06NDP**	
	60	4	50–200	B	**36JUH06ND**		400	**37JUH06NDD**		400A/250V	**37JUH06NDF**		250	**37JUH06NDP**	
	75	5	55–250	—	**36LPS06ND**		400	**37LPS06NDD**		400A/250V	**37LPS06NDF**		400	**37LPS06NDP**	
	150	5	55–250	—	**36LPU06ND**		600	**37LPU06NDD**		600A/250V	**37LPU06NDF**		600	**37LPU06NDP**	
	300	6	160–630	—	**36MPX06ND**		1200	**37MPX06NDD**		1200A/250V	**37MPX06NDF**		1200	**37MPX06NDP**	
230	10	1	10–40	A1	**36DUE02NG**		60	**37DUE02NGD**		60A/250V	**37DUE02NGF**		50	**37DUE02NGP**	
	15	(1¾)	10–40	A1	**36EUE02NG**		60	**37EUE02NGD**		60A/250V	**37EUE02NGF**		50	**37EUE02NGP**	
	25	2	13–52	B	**36FUF02NG**		100	**37FUF02NGD**		100A/250V	**37FUF02NGF**		100	**37FUF02NGP**	
	30	(2½)	25–100	B	**36GUG02NG**		200	**37GUG02NGD**		200A/250V	**37GUG02NGF**		100	**37GUG02NGP**	
	50	3	25–100	B	**36HUG02NG**		200	**37HUG02NGD**		200A/250V	**37HUG02NGF**		150	**37HUG02NGP**	
	60	(3½)	50–200	B	**36IUH02NG**		200	**37IUH02NGD**		200A/250V	**37IUH02NGF**		250	**37IUH02NGP**	
	75	4	50–200	B	**36JUH02NG**		400	**37JUH02NGD**		400A/250V	**37JUH02NGF**		250	**37JUH02NGP**	
	100	5	55–250	—	**36LPS02NG**		400	**37LPS02NGD**		400A/250V	**37LPS02NGF**		400	**37LPS02NGP**	
	150	5	55–250	—	**36LPU02NG**		600	**37LPU02NGD**		600A/250V	**37LPU02NGF**		600	**37LPU02NGP**	
	350	6	160–630	—	**36MPX02NG**		1200	**37MPX02NGD**		1200A/250V	**37MPX02NGF**		1200	**37MPX02NGP**	
460	15	1	5.5-22	A1	**36DUD04NH**		30	**37DUD04NHD**		30A/600V	**37DUD04NHF**		30	**37DUD04NHP**	
	30	(1¾)	10–40	A1	**36EUE04NH**		60	**37EUE04NHD**		60A/600V	**37EUE04NHF**		50	**37EUE04NHP**	
	40	2	13–52	B	**36FUF04NH**		100	**37FUF04NHD**		100A/600V	**37FUF04NHF**		100	**37FUF04NHP**	
	60	(2½)	25–100	B	**36GUG04NH**		200	**37GUG04NHD**		200A/600V	**37GUG04NHF**		100	**37GUG04NHP**	
	75	3	25–100	B	**36HUG04NH**		200	**37HUG04NHD**		200A/600V	**37HUG04NHF**		125	**37HUG04NHP**	
	100	(3½)	50–200	B	**36IUH04NH**		200	**37IUH04NHD**		200A/600V	**37IUH04NHF**		150	**37IUH04NHP**	
	150	4	50–200	B	**36JUH04NH**		400	**37JUH04NHD**		400A/600V	**37JUH04NHF**		250	**37JUH04NHP**	
	200	5	55–250	—	**36LPS04NH**		400	**37LPS04NHD**		400A/600V	**37LPS04NHF**		400	**37LPS04NHP**	
	300	5	55–250	—	**36LPU04NH**		600	**37LPU04NHD**		600A/600V	**37LPU04NHF**		600	**37LPU04NHP**	
	700	6	160–630	—	**36MPX04NH**		1600	**37MPX04NHD**		1600A/600V	**37MPX04NHF**		1200	**37MPX04NHP**	
575	15	1	5.5-22	A1	**36DUD05NE**		30	**37DUD05NED**		30A/600V	**37DUD05NEF**		30	**37DUD05NEP**	
	30	(1¾)	10–40	A1	**36EUE05NE**		60	**37EUE05NED**		60A/600V	**37EUE05NEF**		50	**37EUE05NEP**	
	40	2	13–52	B	**36FUF05NE**		100	**37FUF05NED**		100A/600V	**37FUF05NEF**		50	**37FUF05NEP**	
	60	(2½)	25–100	B	**36GUG05NE**		100	**37GUG05NED**		100A/600V	**37GUG05NEF**		100	**37GUG05NEP**	
	75	3	25–100	B	**36HUG05NE**		200	**37HUG05NED**		200A/600V	**37HUG05NEF**		125	**37HUG05NEP**	
	100	(3½)	50–200	B	**36IUH05NE**		200	**37IUH05NED**		200A/600V	**37IUH05NEF**		150	**37IUH05NEP**	
	150	4	50–200	B	**36JUH05NE**		400	**37JUH05NED**		400A/600V	**37JUH05NEF**		250	**37JUH05NEP**	
	200	5	55–250	—	**36LPS05NE**		400	**37LPS05NED**		400A/600V	**37LPS05NEF**		250	**37LPS05NEP**	
	300	5	55–250	—	**36LPU05NE**		600	**37LPU05NED**		600A/600V	**37LPU05NEF**		400	**37LPU05NEP**	
	700	6	160–630	—	**37MPX05NF**		1600	**37MPX05NED**		1600A/600V	**37MPX05NEF**		1600	**37MPX05NEP**	

Note: All starter sizes carry one maximum Hp rating (per the National Electric Code).

① See page 17-112 for conduit hubs and conversion instructions.

Ordering Information

- Field Modification Kits see page 17-106.
- Factory Modifications see page 17-121.
- Dimensions see page 17-169.
- Wiring Diagrams see page 17-185.
- Replacement Parts see page 17-133.

Coil and Control Voltage

The coil voltage will always match the motor voltage. As standard, a CPT is supplied and 120V control voltage is utilized. To change to 120V voltage (CPT not supplied), change the 9th character to "F". To change to 24VAC voltage (CPT not supplied), change the 9th character to "J".

NEMA 1 General Purpose Enclosures

			Overload Relay		Non-Combination		Combination Non-Fusible Disconnect			Combination Fusible Disconnect			Combination Circit Breaker		
Motor Voltage	Max Hp	NEMA Size (1/2 Size)	Amp Range	Frame Size	Catalog Number	List Price $	Disc. Amp Rating	Catalog Number	List Price $	Fuse Clip Amp/Volt Rating	Catalog Number	List Price $	Circuit Breaker Amps	Catalog Number	List Price $
200	10	1	10–40	A1	**36DUEC6BD**		60	**37DUEC6BDD**		60A/250V	**37DUEC6BDF**		50	**37DUEC6BDP**	
	15	(1¾)	10–40	A1	**36EUEC6BD**		100	**37EUEC6BDD**		100A/250V	**37EUEC6BDF**		100	**37EUEC6BDP**	
	20	2	13–52	B	**36FUFC6BD**		100	**37FUFC6BDD**		100A/250V	**37FUFC6BDF**		100	**37FUFC6BDP**	
	30	(2½)	25–100	B	**36GUGC6BD**		200	**37GUGC6BDD**		200A/250V	**37GUGC6BDF**		125	**37GUGC6BDP**	
	40	3	25–100	B	**36HUGC6BD**		200	**37HUGC6BDD**		200A/250V	**37HUGC6BDF**		150	**37HUGC6BDP**	
	50	(3½)	50–200	B	**36IUHC6BD**		200	**37IUHC6BDD**		200A/250V	**37IUHC6BDF**		250	**37IUHC6BDP**	
	60	4	50–200	B	**36JUHC6BD**		400	**37JUHC6BDD**		400A/250V	**37JUHC6BDF**		250	**37JUHC6BDP**	
	75	5	55–250	—	**36LPSC6BD**		400	**37LPSC6BDD**		400A/250V	**37LPSC6BDF**		400	**37LPSC6BDP**	
	150	5	55–250	—	**36LPUC6BD**		600	**37LPUC6BDD**		600A/250V	**37LPUC6BDF**		600	**37LPUC6BDP**	
	300	6	160–630	—	**36MPXC6BD**		1200	**37MPXC6BDD**		1200A/250V	**37MPXC6BDF**		1200	**37MPXC6BDP**	
230	10	1	10–40	A1	**36DUEC2BG**		60	**37DUEC2BGD**		60A/250V	**37DUEC2BGF**		50	**37DUEC2BGP**	
	15	(1¾)	10–40	A1	**36EUEC2BG**		60	**37EUEC2BGD**		60A/250V	**37EUEC2BGF**		50	**37EUEC2BGP**	
	25	2	13–52	B	**36FUFC2BG**		100	**37FUFC2BGD**		100A/250V	**37FUFC2BGF**		100	**37FUFC2BGP**	
	30	(2½)	25–100	B	**36GUGC2BG**		200	**37GUGC2BGD**		200A/250V	**37GUGC2BGF**		100	**37GUGC2BGP**	
	50	3	25–100	B	**36HUGC2BG**		200	**37HUGC2BGD**		200A/250V	**37HUGC2BGF**		150	**37HUGC2BGP**	
	60	(3½)	50–200	B	**36IUHC2BG**		200	**37IUHC2BGD**		200A/250V	**37IUHC2BGF**		250	**37IUHC2BGP**	
	75	4	50–200	B	**36JUHC2BG**		400	**37JUHC2BGD**		400A/250V	**37JUHC2BGF**		250	**37JUHC2BGP**	
	100	5	55–250	—	**36LPSC2BG**		400	**37LPSC2BGD**		400A/250V	**37LPSC2BGF**		400	**37LPSC2BGP**	
	150	5	55–250	—	**36LPUC2BG**		600	**37LPUC2BGD**		600A/250V	**37LPUC2BGF**		600	**37LPUC2BGP**	
	350	6	160–630	—	**36MPXC2BG**		1200	**37MPXC2BGD**		1200A/250V	**37MPXC2BGF**		1200	**37MPXC2BGP**	
460	15	1	5.5-22	A1	**36DUDC4BH**		30	**37DUDC4BHD**		30A/600V	**37DUDC4BHF**		30	**37DUDC4BHP**	
	30	(1¾)	10–40	A1	**36EUEC4BH**		60	**37EUEC4BHD**		60A/600V	**37EUEC4BHF**		50	**37EUEC4BHP**	
	40	2	13–52	B	**36FUFC4BH**		100	**37FUFC4BHD**		100A/600V	**37FUFC4BHF**		100	**37FUFC4BHP**	
	60	(2½)	25–100	B	**36GUGC4BH**		200	**37GUGC4BHD**		200A/600V	**37GUGC4BHF**		100	**37GUGC4BHP**	
	75	3	25–100	B	**36HUGC4BH**		200	**37HUGC4BHD**		200A/600V	**37HUGC4BHF**		125	**37HUGC4BHP**	
	100	(3½)	50–200	B	**36IUHC4BH**		200	**37IUHC4BHD**		200A/600V	**37IUHC4BHF**		150	**37IUHC4BHP**	
	150	4	50–200	B	**36JUHC4BH**		400	**37JUHC4BHD**		400A/600V	**37JUHC4BHF**		250	**37JUHC4BHP**	
	200	5	55–250	—	**36LPSC4BH**		400	**37LPSC4BHD**		400A/600V	**37LPSC4BHF**		400	**37LPSC4BHP**	
	300	5	55–250	—	**36LPUC4BH**		600	**37LPUC4BHD**		600A/600V	**37LPUC4BHF**		600	**37LPUC4BHP**	
	700	6	160–630	—	**36MPXC4BH**		1600	**37MPXC4BHD**		1600A/600V	**37MPXC4BHF**		1200	**37MPXC4BHP**	
575	15	1	5.5-22	A1	**36DUDC5BE**		30	**37DUDC5BED**		30A/600V	**37DUDC5BEF**		30	**37DUDC5BEP**	
	30	(1¾)	10–40	A1	**36EUEC5BE**		60	**37EUEC5BED**		60A/600V	**37EUEC5BEF**		50	**37EUEC5BEP**	
	40	2	13–52	B	**36FUFC5BE**		100	**37FUFC5BED**		100A/600V	**37FUFC5BEF**		50	**37FUFC5BEP**	
	60	(2½)	25–100	B	**36GUGC5BE**		100	**37GUGC5BED**		100A/600V	**37GUGC5BEF**		100	**37GUGC5BEP**	
	75	3	25–100	B	**36HUGC5BE**		200	**37HUGC5BED**		200A/600V	**37HUGC5BEF**		125	**37HUGC5BEP**	
	100	(3½)	50–200	B	**36IUHC5BE**		200	**37IUHC5BED**		200A/600V	**37IUHC5BEF**		150	**37IUHC5BEP**	
	150	4	50–200	B	**36JUHC5BE**		400	**37JUHC5BED**		400A/600V	**37JUHC5BEF**		250	**37JUHC5BEP**	
	200	5	55–250	—	**36LPSC5BE**		400	**37LPSC5BED**		400A/600V	**37LPSC5BEF**		250	**37LPSC5BEP**	
	300	5	55–250	—	**36LPUC5BE**		600	**37LPUC5BED**		600A/600V	**37LPUC5BEF**		400	**37LPUC5BEP**	
	700	6	160–630	—	**37MPXC5BF**		1600	**37MPXC5BED**		1600A/600V	**37MPXC5BEF**		1600	**37MPXC5BEP**	

Note: All starter sizes carry one maximum Hp rating (per the National Electric Code).

Ordering Information

- Field Modification Kits see page 17-106.
- Factory Modifications see page 17-121.
- Dimensions see page 17-169.
- Wiring Diagrams see page 17-185.
- Replacement Parts see page 17-133.

Coil and Control Voltage

The coil voltage will always match the motor voltage. As standard, a CPT is supplied and 120V control voltage is utilized. To change to 120V voltage (CPT not supplied), change the 9th character to "F". To change to 24VAC voltage (CPT not supplied), change the 9th character to "J".

NEMA 4 Painted Enclosures

			Overload Relay		Non-Combination		Combination Non-Fusible Disconnect			Combination Fusible Disconnect			Combination Circit Breaker		
Motor Voltage	Max Hp	NEMA Size (1/2 Size)	Amp Range	Frame Size	Catalog Number	List Price $	Disc. Amp Rating	Catalog Number	List Price $	Fuse Clip Amp/Volt Rating	Catalog Number	List Price $	Circuit Breaker Amps	Catalog Number	List Price $
200	10	1	10–40	A1	**36DUEC6ED**		60	**37DUEC6EDD**		60A/250V	**37DUEC6EDF**		50	**37DUEC6EDP**	
	15	(1¾)	10–40	A1	**36EUEC6ED**		100	**37EUEC6EDD**		100A/250V	**37EUEC6EDF**		100	**37EUEC6EDP**	
	20	2	13–52	B	**36FUFC6ED**		100	**37FUFC6EDD**		100A/250V	**37FUFC6EDF**		100	**37FUFC6EDP**	
	30	(2½)	25–100	B	**36GUGC6ED**		200	**37GUGC6EDD**		200A/250V	**37GUGC6EDF**		125	**37GUGC6EDP**	
	40	3	25–100	B	**36HUGC6ED**		200	**37HUGC6EDD**		200A/250V	**37HUGC6EDF**		150	**37HUGC6EDP**	
	50	(3½)	50–200	B	**36IUHC6ED**		200	**37IUHC6EDD**		200A/250V	**37IUHC6EDF**		250	**37IUHC6EDP**	
	60	4	50–200	B	**36JUHC6ED**		400	**37JUHC6EDD**		400A/250V	**37JUHC6EDF**		250	**37JUHC6EDP**	
	75	5	55–250	—	**36LPSC6ED**		400	**37LPSC6EDD**		400A/250V	**37LPSC6EDF**		400	**37LPSC6EDP**	
	150	5	55–250	—	**36LPUC6ED**		600	**37LPUC6EDD**		600A/250V	**37LPUC6EDF**		600	**37LPUC6EDP**	
	300	6	160–630	—	**36MPXC6ED**		1200	**37MPXC6EDD**		1200A/250V	**37MPXC6EDF**		1200	**37MPXC6EDP**	
230	10	1	10–40	A1	**36DUEC2EG**		60	**37DUEC2EGD**		60A/250V	**37DUEC2EGF**		50	**37DUEC2EGP**	
	15	(1¾)	10–40	A1	**36EUEC2EG**		60	**37EUEC2EGD**		60A/250V	**37EUEC2EGF**		50	**37EUEC2EGP**	
	25	2	13–52	B	**36FUFC2EG**		100	**37FUFC2EGD**		100A/250V	**37FUFC2EGF**		100	**37FUFC2EGP**	
	30	(2½)	25–100	B	**36GUGC2EG**		200	**37GUGC2EGD**		200A/250V	**37GUGC2EGF**		100	**37GUGC2EGP**	
	50	3	25–100	B	**36HUGC2EG**		200	**37HUGC2EGD**		200A/250V	**37HUGC2EGF**		150	**37HUGC2EGP**	
	60	(3½)	50–200	B	**36IUHC2EG**		200	**37IUHC2EGD**		200A/250V	**37IUHC2EGF**		250	**37IUHC2EGP**	
	75	4	50–200	B	**36JUHC2EG**		400	**37JUHC2EGD**		400A/250V	**37JUHC2EGF**		250	**37JUHC2EGP**	
	100	5	55–250	—	**36LPSC2EG**		400	**37LPSC2EGD**		400A/250V	**37LPSC2EGF**		400	**37LPSC2EGP**	
	150	5	55–250	—	**36LPUC2EG**		600	**37LPUC2EGD**		600A/250V	**37LPUC2EGF**		600	**37LPUC2EGP**	
	350	6	160–630	—	**36MPXC2EG**		1200	**37MPXC2EGD**		1200A/250V	**37MPXC2EGF**		1200	**37MPXC2EGP**	
460	15	1	5.5-22	A1	**36DUDC4EH**		30	**37DUDC4EHD**		30A/600V	**37DUDC4EHF**		30	**37DUDC4EHP**	
	30	(1¾)	10–40	A1	**36EUEC4EH**		60	**37EUEC4EHD**		60A/600V	**37EUEC4EHF**		50	**37EUEC4EHP**	
	40	2	13–52	B	**36FUFC4EH**		100	**37FUFC4EHD**		100A/600V	**37FUFC4EHF**		100	**37FUFC4EHP**	
	60	(2½)	25–100	B	**36GUGC4EH**		200	**37GUGC4EHD**		200A/600V	**37GUGC4EHF**		100	**37GUGC4EHP**	
	75	3	25–100	B	**36HUGC4EH**		200	**37HUGC4EHD**		200A/600V	**37HUGC4EHF**		125	**37HUGC4EHP**	
	100	(3½)	50–200	B	**36IUHC4EH**		200	**37IUHC4EHD**		200A/600V	**37IUHC4EHF**		150	**37IUHC4EHP**	
	150	4	50–200	B	**36JUHC4EH**		400	**37JUHC4EHD**		400A/600V	**37JUHC4EHF**		250	**37JUHC4EHP**	
	200	5	55–250	—	**36LPSC4EH**		400	**37LPSC4EHD**		400A/600V	**37LPSC4EHF**		400	**37LPSC4EHP**	
	300	5	55–250	—	**36LPUC4EH**		600	**37LPUC4EHD**		600A/600V	**37LPUC4EHF**		600	**37LPUC4EHP**	
	700	6	160–630	—	**36MPXC4EH**		1600	**37MPXC4EHD**		1600A/600V	**37MPXC4EHF**		1200	**37MPXC4EHP**	
575	15	1	5.5-22	A1	**36DUDC5EE**		30	**37DUDC5EED**		30A/600V	**37DUDC5EEF**		30	**37DUDC5EEP**	
	30	(1¾)	10–40	A1	**36EUEC5EE**		60	**37EUEC5EED**		60A/600V	**37EUEC5EEF**		50	**37EUEC5EEP**	
	40	2	13–52	B	**36FUFC5EE**		100	**37FUFC5EED**		100A/600V	**37FUFC5EEF**		50	**37FUFC5EEP**	
	60	(2½)	25–100	B	**36GUGC5EE**		100	**37GUGC5EED**		100A/600V	**37GUGC5EEF**		100	**37GUGC5EEP**	
	75	3	25–100	B	**36HUGC5EE**		200	**37HUGC5EED**		200A/600V	**37HUGC5EEF**		125	**37HUGC5EEP**	
	100	(3½)	50–200	B	**36IUHC5EE**		200	**37IUHC5EED**		200A/600V	**37IUHC5EEF**		150	**37IUHC5EEP**	
	150	4	50–200	B	**36JUHC5EE**		400	**37JUHC5EED**		400A/600V	**37JUHC5EEF**		250	**37JUHC5EEP**	
	200	5	55–250	—	**36LPSC5EE**		400	**37LPSC5EED**		400A/600V	**37LPSC5EEF**		250	**37LPSC5EEP**	
	300	5	55–250	—	**36LPUC5EE**		600	**37LPUC5EED**		600A/600V	**37LPUC5EEF**		400	**37LPUC5EEP**	
	700	6	160–630	—	**37MPXC5EF**		1600	**37MPXC5EED**		1600A/600V	**37MPXC5EEF**		1600	**37MPXC5EEP**	

Note: All starter sizes carry one maximum Hp rating (per the National Electric Code).

Ordering Information

- Field Modification Kits see page 17-106.
- Factory Modifications see page 17-121.
- Dimensions see page 17-169.
- Wiring Diagrams see page 17-185.
- Replacement Parts see page 17-133.

Coil and Control Voltage

The coil voltage will always match the motor voltage. As standard, a CPT is supplied and 120V control voltage is utilized. To change to 120V voltage (CPT not supplied), change the 9th character to "F". To change to 24VAC voltage (CPT not supplied), change the 9th character to "J".

NEMA 4/4X Stainless Steel Enclosures

			Overload Relay		Non-Combination		Combination Non-Fusible Disconnect			Combination Fusible Disconnect			Combination Circit Breaker		
Motor Voltage	Max Hp	NEMA Size (1/2 Size)	Amp Range	Frame Size	Catalog Number	List Price $	Disc. Amp Rating	Catalog Number	List Price $	Fuse Clip Amp/Volt Rating	Catalog Number	List Price $	Circuit Breaker Amps	Catalog Number	List Price $
200	10	1	10–40	A1	**36DUEC6WD**		60	**37DUEC6WDD**		60A/250V	**37DUEC6WDF**		50	**37DUEC6WDP**	
	15	(1¾)	10–40	A1	**36EUEC6WD**		100	**37EUEC6WDD**		100A/250V	**37EUEC6WDF**		100	**37EUEC6WDP**	
	20	2	13–52	B	**36FUFC6WD**		100	**37FUFC6WDD**		100A/250V	**37FUFC6WDF**		100	**37FUFC6WDP**	
	30	(2½)	25–100	B	**36GUGC6WD**		200	**37GUGC6WDD**		200A/250V	**37GUGC6WDF**		125	**37GUGC6WDP**	
	40	3	25–100	B	**36HUGC6WD**		200	**37HUGC6WDD**		200A/250V	**37HUGC6WDF**		150	**37HUGC6WDP**	
	50	(3½)	50–200	B	**36IUHC6WD**		200	**37IUHC6WDD**		200A/250V	**37IUHC6WDF**		250	**37IUHC6WDP**	
	60	4	50–200	B	**36JUHC6WD**		400	**37JUHC6WDD**		400A/250V	**37JUHC6WDF**		250	**37JUHC6WDP**	
230	10	1	10–40	A1	**36DUEC2WG**		60	**37DUEC2WGD**		60A/250V	**37DUEC2WGF**		50	**37DUEC2WGP**	
	15	(1¾)	10–40	A1	**36EUEC2WG**		60	**37EUEC2WGD**		60A/250V	**37EUEC2WGF**		50	**37EUEC2WGP**	
	25	2	13–52	B	**36FUFC2WG**		100	**37FUFC2WGD**		100A/250V	**37FUFC2WGF**		100	**37FUFC2WGP**	
	30	(2½)	25–100	B	**36GUGC2WG**		200	**37GUGC2WGD**		200A/250V	**37GUGC2WGF**		100	**37GUGC2WGP**	
	50	3	25–100	B	**36HUGC2WG**		200	**37HUGC2WGD**		200A/250V	**37HUGC2WGF**		150	**37HUGC2WGP**	
	60	(3½)	50–200	B	**36IUHC2WG**		200	**37IUHC2WGD**		200A/250V	**37IUHC2WGF**		250	**37IUHC2WGP**	
	75	4	50–200	B	**36JUHC2WG**		400	**37JUHC2WGD**		400A/250V	**37JUHC2WGF**		250	**37JUHC2WGP**	
460	15	1	5.5-22	A1	**36DUDC4WH**		30	**37DUDC4WHD**		30A/600V	**37DUDC4WHF**		30	**37DUDC4WHP**	
	30	(1¾)	10–40	A1	**36EUEC4WH**		60	**37EUEC4WHD**		60A/600V	**37EUEC4WHF**		50	**37EUEC4WHP**	
	40	2	13–52	B	**36FUFC4WH**		100	**37FUFC4WHD**		100A/600V	**37FUFC4WHF**		100	**37FUFC4WHP**	
	60	(2½)	25–100	B	**36GUGC4WH**		200	**37GUGC4WHD**		200A/600V	**37GUGC4WHF**		100	**37GUGC4WHP**	
	75	3	25–100	B	**36HUGC4WH**		200	**37HUGC4WHD**		200A/600V	**37HUGC4WHF**		125	**37HUGC4WHP**	
	100	(3½)	50–200	B	**36IUHC4WH**		200	**37IUHC4WHD**		200A/600V	**37IUHC4WHF**		150	**37IUHC4WHP**	
	150	4	50–200	B	**36JUHC4WH**		400	**37JUHC4WHD**		400A/600V	**37JUHC4WHF**		250	**37JUHC4WHP**	
575	15	1	5.5-22	A1	**36DUDC5WE**		30	**37DUDC5WED**		30A/600V	**37DUDC5WEF**		30	**37DUDC5WEP**	
	30	(1¾)	10–40	A1	**36EUEC5WE**		60	**37EUEC5WED**		60A/600V	**37EUEC5WEF**		50	**37EUEC5WEP**	
	40	2	13–52	B	**36FUFC5WE**		100	**37FUFC5WED**		100A/600V	**37FUFC5WEF**		50	**37FUFC5WEP**	
	60	(2½)	25–100	B	**36GUGC5WE**		100	**37GUGC5WED**		100A/600V	**37GUGC5WEF**		100	**37GUGC5WEP**	
	75	3	25–100	B	**36HUGC5WE**		200	**37HUGC5WED**		200A/600V	**37HUGC5WEF**		125	**37HUGC5WEP**	
	100	(3½)	50–200	B	**36IUHC5WE**		200	**37IUHC5WED**		200A/600V	**37IUHC5WEF**		150	**37IUHC5WEP**	
	150	4	50–200	B	**36JUHC5WE**		400	**37JUHC5WED**		400A/600V	**37JUHC5WEF**		250	**37JUHC5WEP**	

Note: All starter sizes carry one maximum Hp rating (per the National Electric Code).

Ordering Information

- ► Field Modification Kits see page 17-106.
- ► Factory Modifications see page 17-121.
- ► Dimensions see page 17-169.
- ► Wiring Diagrams see page 17-185.
- ► Replacement Parts see page 17-133.

Coil and Control Voltage

The coil voltage will always match the motor voltage. As standard, a CPT is supplied and 120V control voltage is utilized. To change to 120V voltage (CPT not supplied), change the 9th character to "F". To change to 24VAC voltage (CPT not supplied), change the 9th character to "J".

NEMA 12 Enclosures (Supplied as NEMA 12, field convertible to 3/3R)①

			Overload Relay		Non-Combination		Combination Non-Fusible Disconnect			Combination Fusible Disconnect			Combination Circit Breaker		
Motor Voltage	Max Hp	NEMA Size (1/2 Size)	Amp Range	Frame Size	Catalog Number	List Price $	Disc. Amp Rating	Catalog Number	List Price $	Fuse Clip Amp/Volt Rating	Catalog Number	List Price $	Circuit Breaker Amps	Catalog Number	List Price $
200	10	1	10–40	A1	**36DUEC6ND**		60	**37DUEC6NDD**		60A/250V	**37DUEC6NDF**		50	**37DUEC6NDP**	
	15	(1¾)	10–40	A1	**36EUEC6ND**		100	**37EUEC6NDD**		100A/250V	**37EUEC6NDF**		100	**37EUEC6NDP**	
	20	2	13–52	B	**36FUFC6ND**		100	**37FUFC6NDD**		100A/250V	**37FUFC6NDF**		100	**37FUFC6NDP**	
	30	(2½)	25–100	B	**36GUGC6ND**		200	**37GUGC6NDD**		200A/250V	**37GUGC6NDF**		125	**37GUGC6NDP**	
	40	3	25–100	B	**36HUGC6ND**		200	**37HUGC6NDD**		200A/250V	**37HUGC6NDF**		150	**37HUGC6NDP**	
	50	(3½)	50–200	B	**36IUHC6ND**		200	**37IUHC6NDD**		200A/250V	**37IUHC6NDF**		250	**37IUHC6NDP**	
	60	4	50–200	B	**36JUHC6ND**		400	**37JUHC6NDD**		400A/250V	**37JUHC6NDF**		250	**37JUHC6NDP**	
	75	5	55–250	—	**36LPSC6ND**		400	**37LPSC6NDD**		400A/250V	**37LPSC6NDF**		400	**37LPSC6NDP**	
	150	5	55–250	—	**36LPUC6ND**		600	**37LPUC6NDD**		600A/250V	**37LPUC6NDF**		600	**37LPUC6NDP**	
	300	6	160–630	—	**36MPXC6ND**		1200	**37MPXC6NDD**		1200A/250V	**37MPXC6NDF**		1200	**37MPXC6NDP**	
230	10	1	10–40	A1	**36DUEC2NG**		60	**37DUEC2NGD**		60A/250V	**37DUEC2NGF**		50	**37DUEC2NGP**	
	15	(1¾)	10–40	A1	**36EUEC2NG**		60	**37EUEC2NGD**		60A/250V	**37EUEC2NGF**		50	**37EUEC2NGP**	
	25	2	13–52	B	**36FUFC2NG**		100	**37FUFC2NGD**		100A/250V	**37FUFC2NGF**		100	**37FUFC2NGP**	
	30	(2½)	25–100	B	**36GUGC2NG**		200	**37GUGC2NGD**		200A/250V	**37GUGC2NGF**		100	**37GUGC2NGP**	
	50	3	25–100	B	**36HUGC2NG**		200	**37HUGC2NGD**		200A/250V	**37HUGC2NGF**		150	**37HUGC2NGP**	
	60	(3½)	50–200	B	**36IUHC2NG**		200	**37IUHC2NGD**		200A/250V	**37IUHC2NGF**		250	**37IUHC2NGP**	
	75	4	50–200	B	**36JUHC2NG**		400	**37JUHC2NGD**		400A/250V	**37JUHC2NGF**		250	**37JUHC2NGP**	
	100	5	55–250	—	**36LPSC2NG**		400	**37LPSC2NGD**		400A/250V	**37LPSC2NGF**		400	**37LPSC2NGP**	
	150	5	55–250	—	**36LPUC2NG**		600	**37LPUC2NGD**		600A/250V	**37LPUC2NGF**		600	**37LPUC2NGP**	
	350	6	160–630	—	**36MPXC2NG**		1200	**37MPXC2NGD**		1200A/250V	**37MPXC2NGF**		1200	**37MPXC2NGP**	
460	15	1	5.5-22	A1	**36DUDC4NH**		30	**37DUDC4NHD**		30A/600V	**37DUDC4NHF**		30	**37DUDC4NHP**	
	30	(1¾)	10–40	A1	**36EUEC4NH**		60	**37EUEC4NHD**		60A/600V	**37EUEC4NHF**		50	**37EUEC4NHP**	
	40	2	13–52	B	**36FUFC4NH**		100	**37FUFC4NHD**		100A/600V	**37FUFC4NHF**		100	**37FUFC4NHP**	
	60	(2½)	25–100	B	**36GUGC4NH**		200	**37GUGC4NHD**		200A/600V	**37GUGC4NHF**		100	**37GUGC4NHP**	
	75	3	25–100	B	**36HUGC4NH**		200	**37HUGC4NHD**		200A/600V	**37HUGC4NHF**		125	**37HUGC4NHP**	
	100	(3½)	50–200	B	**36IUHC4NH**		200	**37IUHC4NHD**		200A/600V	**37IUHC4NHF**		150	**37IUHC4NHP**	
	150	4	50–200	B	**36JUHC4NH**		400	**37JUHC4NHD**		400A/600V	**37JUHC4NHF**		250	**37JUHC4NHP**	
	200	5	55–250	—	**36LPSC4NH**		400	**37LPSC4NHD**		400A/600V	**37LPSC4NHF**		400	**37LPSC4NHP**	
	300	5	55–250	—	**36LPUC4NH**		600	**37LPUC4NHD**		600A/600V	**37LPUC4NHF**		600	**37LPUC4NHP**	
	700	6	160–630	—	**36MPXC4NH**		1600	**37MPXC4NHD**		1600A/600V	**37MPXC4NHF**		1200	**37MPXC4NHP**	
575	15	1	5.5-22	A1	**36DUDC5NE**		30	**37DUDC5NED**		30A/600V	**37DUDC5NEF**		30	**37DUDC5NEP**	
	30	(1¾)	10–40	A1	**36EUEC5NE**		60	**37EUEC5NED**		60A/600V	**37EUEC5NEF**		50	**37EUEC5NEP**	
	40	2	13–52	B	**36FUFC5NE**		100	**37FUFC5NED**		100A/600V	**37FUFC5NEF**		50	**37FUFC5NEP**	
	60	(2½)	25–100	B	**36GUGC5NE**		100	**37GUGC5NED**		100A/600V	**37GUGC5NEF**		100	**37GUGC5NEP**	
	75	3	25–100	B	**36HUGC5NE**		200	**37HUGC5NED**		200A/600V	**37HUGC5NEF**		125	**37HUGC5NEP**	
	100	(3½)	50–200	B	**36IUHC5NE**		200	**37IUHC5NED**		200A/600V	**37IUHC5NEF**		150	**37IUHC5NEP**	
	150	4	50–200	B	**36JUHC5NE**		400	**37JUHC5NED**		400A/600V	**37JUHC5NEF**		250	**37JUHC5NEP**	
	200	5	55–250	—	**36LPSC5NE**		400	**37LPSC5NED**		400A/600V	**37LPSC5NEF**		250	**37LPSC5NEP**	
	300	5	55–250	—	**36LPUC5NE**		600	**37LPUC5NED**		600A/600V	**37LPUC5NEF**		400	**37LPUC5NEP**	
	700	6	160–630	—	**37MPXC5NF**		1600	**37MPXC5NED**		1600A/600V	**37MPXC5NEF**		1600	**37MPXC5NEP**	

Note: All starter sizes carry one maximum Hp rating (per the National Electric Code).

① See page 17-112 for conduit hubs and conversion instructions.

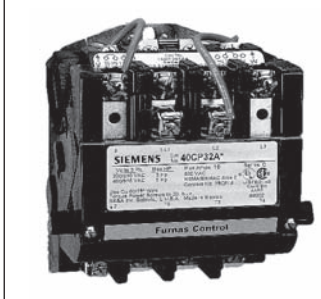

Ordering Information

- Replace the (*) with a letter from the coil table. Dual voltage coils are wired on high voltage unless specified on order.
- Field Modification Kits see page 17-106.
- Factory Modifications see page 17-121.
- Dimensions see pages 17-146 open and 17-159 enclosed.
- Wiring Diagrams see page 17-186.
- Replacement Parts see page 17-133.

Coil Table

60Hz Voltage	Letter
24	J
120	F
110–120/220–240①	A
200–208	D
220–240	G
277	L
220–240/440–480①	C
440–480	H
575–600	E

For other voltages and frequencies, see Factory Modifications page 17-121.

Open Type & Standard Width Enclosure, 3-Phase, 3-Pole

Max Hp							Enclosure											
							Open Type⑥		NEMA 1 General Purpose		NEMA 4/4X Stainless② Watertight, Dust-tight Corrosion Resistant 304 Stainless Steel		NEMA 4X Fiberglass Watertight, Dust-tight Corrosion Resistant		NEMA 7 & 9 NEMA 3 & 4 Div1 and Div 2 Class I Groups C & D Class II Groups E, F & G Class III Bolted Enclosures Indoor/Outdoor Use		NEMA 12② NEMA 3/3R Industrial Use Weatherproof	
200 Volts	230 Volts	460 Volts	575 Volts	Contactor Amp Rating	NEMA Size	Half Size	Catalog Number	List Price $	Catalog Number	List Price $	Catalog Number	List Price $	Catalog Number	List Price $	Catalog Number	List Price $	Catalog Number	List Price $
1½	1½	2	2	9	00	—	40BP32A*		40BP32B*		Use Size 0	—	Use Size 0	—	Use Size 0	—	Use Size 0	—
3	3	5	5	18	0	—	40CP32A*		40CP32B*		40CP32W*		40CP32F*		40CP32H*		40CP320*	
7½	7½	10	10	27	1	—	40DP32A*		40DP32B*		40DP32W*		40DP32F*		40DP32H*		40DP320*	
10	10	15	15	40	—	1¾	40EP32A*		40EP32B*		40EP32W*		40EP32F*		40EP32H*		40EP320*	
10	15	25	25	45	2	—	40FP32A*		40FP32B*		40FP32W*		40FP32F*		40FP32H*		40FP320*	
15	20	30	30	60	—	2½	40GP32A*		40GP32B*		40GP32W*		40GP32F*		40GP32H*		40GP320*	
25	30	50	50	90	3	—	40HP32A*		40HP32B*		40HP32W*		40HP32F*		40HP32H*		40HP320*	
30	40	75	75	115	—	3½	40IP32A*		40IP32B*		40IP32W*		40IP32F*		40IP32H*		40IP320*	
40	50	100	100	135	4	—	40JG32A*		40JG32B*		40JG32W*		40JG32F*		40JG32H*		40JG320*	
75	100	200	200	270	5	—	40LP32A*		40LP32B*		40LP32E*③		—	—	40LP32H*		40LP320*	
150	200	400	400	540	6	—	40MP32A*		40MP32B*		40MP32E*③		—	—	—	—	40MP320*	
—	300	600	600	810	7④⑦	—	40NH32A*		40NH32B*		40NH32E*③		—	—	—	—	40NH320*	
—	450	900	900	1215	8⑤⑦	—	40PH32A*		40PH32B*		40PH32E*③		—	—	—	—	40PH320*	

Extra Wide Enclosure, 3-Phase, 3-Pole

Max Hp							Enclosure							
							NEMA 1⑥ General Purpose		NEMA 4/4X Stainless② Watertight, Dust-tight Corrosion Resistant 304 Stainless Steel		NEMA 7 & 9 NEMA 3 & 4 Div 1 and Div 2 Class I Groups C & D Class II Groups E, F & G Class III Bolted Enclosures Indoor/Outdoor Use		NEMA 12② NEMA 3/3R Industrial Use Weatherproof	
200 Volts	230 Volts	460 Volts	575 Volts	Contactor Amp Range	NEMA Size	Half Size	Catalog Number	List Price $	Catalog Number	List Price $	Catalog Number	List Price $	Catalog Number	List Price $
1½	1½	2	2	9	00	—	40BP82B*		Use Size 0	—	Use Size 0	—	Use Size 0	—
3	3	5	5	18	0	—	40CP82B*		40CP82W*		40CP82H*		40CP820*	
7½	7½	10	10	27	1	—	40DP82B*		40DP82W*		40DP82H*		40DP820*	
10	10	15	15	40	—	1¾	40EP82B*		40EP82W*		40EP82H*		40EP820*	
10	15	25	25	45	2	—	40FP82B*		40FP82W*		40FP82H*		40FP820*	
15	20	30	30	60	—	2½	40GP82B*		40GP82W*		40GP82H*		40GP820*	
25	30	50	50	90	3	—	40HP82B*		40HP82W*		40HP82H*		40HP820*	
30	40	75	75	115	—	3½	40IP82B*		40IP82W*		40IP82H*		40IP820*	
40	50	100	100	135	4	—	40JG82B*		40JG82W*		40JG82H*		40JG820*	

Note: Hp's shown above are based on the overload amp range for the FLA's (per the National Electric Code) of typical industrial motors. All starter sizes carry one maximum Hp rating.

① Dual voltage coils not available in size 5-8 starters.
② For conduit hubs and conversion instructions, see page 17-112.
③ Enclosure is NEMA Type 4 (painted steel).
④ Only available
F coil 100-250V AC 50/60Hz, or DC
H coil 150-500V AC 50/60Hz, or DC
⑤ Only available
F coil100-250V AC 50/60Hz, or DC
⑥

Standard Auxiliary Contacts			
Type	Size (3rd Character)	Configuration	Internal / External
All FVNR Starters & Contactors	B Thru E	1N.O.	Internal
	F Thru J	1N.O.	External
	L Thru M	2N.O., 2N.C.	External
	N Thru P	1N.O., 1N.C.	External

⑦ Lugs are not included, refer to page 17-110.

Ordering Information

- Replace the (*) with a letter from the coil table. Dual voltage coils are wired on high voltage unless specified on order.
- Field Modification Kits see page 17-106.
- Factory Modifications see page 17-121.
- Dimensions see pages 17-146 open and 17-159 enclosed.
- Wiring Diagrams see page 17-186.
- Replacement Parts see page 17-133.

Coil Table

60Hz Voltage	Letter
24	J
120	F
110–120/220–240①	A
200–208	D
220–240	G
277	L
220–240/440–480①	C
440–480	H
575–600	E

For other voltages and frequencies, see Factory Modifications page 17-121.

Open Type & Standard Width Enclosure, Single Phase, 2-Pole③④

Max Hp					Enclosure											
					Open Type⑤		NEMA 1 General Purposes		NEMA 4/4X Stainless② Watertight, Dust-tight Corrosion Resistant		NEMA 4X Fiberglass Watertight, Dust-tight Corrosion Resistant 304 Stainless Steel		NEMA 7 & 9 NEMA 3 & 4 Div 1 and Div 2 Class I Groups C & D Class II Groups E, F & G Class III Bolted Enclosure Indoor/Outdoor Use		NEMA 12 NEMA 3/3R② Industrial Use Weatherproof	
115 Volts	208/230 Volts	Contactor Amp Rating	NEMA Size	Half Size	Catalog No	List Price $	Catalog No	List Price $	Catalog No	List Price $	Catalog No	List Price $	Catalog No	List Price $	Catalog No	List Price $
⅓	1	9	00	—	40BP12A*		40BP12B*		Use Size 0	—	Use Size 0	—	Use Size 0	—	Use Size 0	—
1	2	18	0	—	40CP12A*		40CP12B*		40CP12W*		40CP12F*		40CP12H*		40CP120*	
2	3	27	1	—	40DP12A*		40DP12B*		40DP12W*		40DP12F*		40DP12H*		40DP120*	
3	5	35	1P	—	40EP12A*		40EP12B*		40EP12W*		40EP12F*		40EP12H*		40EP120*	
3	7½	45	2	—	40FP12A*		40FP12B*		40FP12W*		40FP12F*		40FP12H*		40FP120*	
5	10	60	—	2½	40GP12A*		40GP12B*		40GP12W*		40GP12F*		40GP12H*		40GP120*	
7½	15	90	3	—	40HP12A*		40HP12B*		40HP12W*		40HP12F*		40HP12H*		40HP120*	

Open Type & Standard Width Enclosure, 4-Pole

Max Hp							Enclosure											
							Open Type		NEMA 1 General Purpose		NEMA 4/4X Stainless② Watertight, Dust-tight Corrosion Resistant 304 Stainless Steel		NEMA 4X Fiberglass Watertight, Dust-tight Corrosion Resistant		NEMA 7 & 9 NEMA 3 & 4 Div 1 and Div 2 Class I Groups C & D Class II Groups E, F & G Class III Bolted Enclosure Indoor/Outdoor Use		NEMA 12 NEMA 3/3R② Industrial Use Weatherproof	
200 Volts	230 Volts	460 Volts	575 Volts	Contactor Amp Rating	NEMA Size	Half Size	Catalog No	List Price $	Catalog No	List Price $	Catalog No	List Price $	Catalog No	List Price $	Catalog No	List Price $	Catalog No	List Price $
⅓	1½	2	2	9	00	—	40BP22A*		40BP22B*		Use Size 0	—	Use Size 0	—	Use Size 0	—	Use Size 0	—
2	3	5	5	18	0	—	40CP22A*		40CP22B*		40CP22W*		40CP22F*		40CP22H*		40CP220*	
3	7½	10	10	27	1	—	40DP22A*		40DP22B*		40DP22W*		40DP22F*		40DP22H*		40DP220*	
5	10	15	15	40	—	1¾	40EP22A*		40EP22B*		40EP22W*		40EP22F*		40EP22H*		40EP220*	

Vacuum Contactors, 3-Phase, 3-Pole①

Max Hp				Contactor Amp Rating	NEMA Size	Open Type	
200V	230V	460V	575V			Catalog Number	List Price $
40	50	100	100	135	4	40JV32A*	
75	100	200	200	270	5	40LV32A*	
150	200	400	400	540	6	40MV32A*	

Note: Hp's shown above are based on the overload amp range for the FLA's (per the National Electric Code) of typical industrial motors. All starter sizes carry one maximum Hp rating.

① Dual voltage coils not available for vacuum contactors. Refer to Page 17-121 for a complete list of available coil voltages.

② For conduit hubs and conversion instructions, see page 17-112.

③ To order single phase contactor in an extra wide enclosure, order the enclosure kit from Page 17-115 and the open style contactor as separate items.

④ Coils D, F, or G will be wired for incoming voltage. J coil will be wired for separate source. Coils E, H, and L do not apply to single phase starters.

⑤ 1 NO Auxiliary.

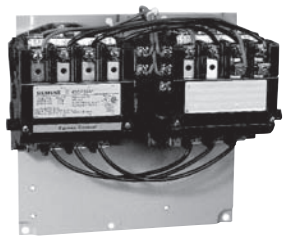

Ordering Information

- Replace the (*) with a letter from the coil table. Dual voltage coils are wired on high voltage unless specified on order.
- Field Modification Kits see page 17-106.
- Factory Modifications see page 17-121.
- Dimensions see pages 17-147 open and 17-164 enclosed.
- Wiring Diagrams see page 17-186.
- Replacement Parts see page 17-133.

Coil Table

60Hz Voltage	Letter
24	J
120	F
110–120/220–240①	A
200–208	D
220–240	G
277	L
220–240/440–480①	C
440–480	H
575–600	E

For other voltages and frequencies, see Factory Modifications page 17-121.

Open Type & Standard Width Enclosure, 3-Phase, 3-Pole

Max Hp							Enclosure											
							Open Type⑦		NEMA 1 General Purpose		NEMA 4/4X Stainless② Watertight, Dust-tight Corrosion Resistant 304 Stainless Steel		NEMA 4X Fiberglass Watertight, Dust-tight Corrosion Resistant		NEMA 7 & 9 NEMA 3 & 4 Div 1 and Div 2 Class I Groups C & D Class II Groups E, F & G Class III Bolted Enclosures Indoor/Outdoor Use		NEMA 12② NEMA 3/3R Industrial Use Weatherproof	
200 Volts	230 Volts	460 Volts	575 Volts	Contactor Amp Rating	NEMA Size	Half Size	Catalog Number	List Price $	Catalog Number	List Price $	Catalog Number	List Price $	Catalog Number	List Price $	Catalog Number	List Price $	Catalog Number	List Price $
½	½	2	2	9	00	—	**43BP32A***		**43BP32B***		Use Size 0	—	Use Size 0	—	Use Size 0	—	Use Size 0	—
3	3	5	5	18	0	—	**43CP32A***		**43CP32B***		**43CP32W***		**43CP32F***		**43CP32H***		**43CP320***	
7½	7½	10	10	27	1	—	**43DP32A***		**43DP32B***		**43DP32W***		**43DP32F***		**43DP32H***		**43DP320***	
10	10	15	15	40	—	1¾	**43EP32A***		**43EP32B***		**43EP32W***		**43EP32F***		**43EP32H***		**43EP320***	
10	15	25	25	45	2	—	**43FP32A***		**43FP32B***		**43FP32W***		**43FP32F***		**43FP32H***		**43FP320***	
15	20	30	30	60	—	2½	**43GP32A***		**43GP32B***		**43GP32W***		**43GP32F***		**43GP32H***		**43GP320***	
25	30	50	50	90	3	—	**43HP32A***		**43HP32B***		**43HP32W***		**43HP32F***		**43HP32H***		**43HP320***	
30	40	75	75	115	—	3½	**43IP32A***		**43IP32B***		**43IP32W***		**43IP32F***		**43IP32H***		**43IP320***	
40	50	100	100	135	4	—	**43JG32A***		**43JG32B***		**43JG32W***		**43JG32F***		**43JG32H***		**43JG320***	
75	100	200	200	270	5	—	**43LP32A***		**43LP32B***		**43LP32E*③**		—	—	—	—	**43LP320***	
100	200	400	400	540	6	—	**43MP32A***		**43MP32B***		**43MP32E*③**		—	—	—	—	**43MP320***	
—	300	600	600	810	7⑤	—	**43NH32A***		**43NH32B***		**43NH32E*③**		—	—	—	—	**43NH320***	
—	450	900	900	1215	8⑥	—	**43PH32A***		—	—	—	—	—	—	—	—	—	—

Open Type & Standard Width Enclosure, Single Phase, 3-Wire, 2-Pole④

Max Hp				Enclosure											
				Open Type		NEMA 1 General Purpose		NEMA 4/4X Stainless② Watertight, Dust-tight Corrosion Resistant 304 Stainless Steel		NEMA 4X Fiberglass Watertight, Dust-tight Corrosion Resistant		NEMA 7 & 9 NEMA 3 & 4 Div 1 and Div 2 Class I Groups C & D Class II Groups E, F & G Class III Bolted Enclosures Indoor/Outdoor Use		NEMA 12② NEMA 3/3R Industrial Use Weatherproof	
115 Volts	208/230 Volts	Contactor Amp Rating	NEMA Size	Catalog No	List Price $	Catalog No	List Price $	Catalog No	List Price $	Catalog No	List Price $	Catalog No	List Price $	Catalog No	List Price $
⅓	1	9	00	**43BP12A***		**43BP12B***		Use Size 0	—	Use Size 0	—	Use Size 0	—	Use Size 0	—
1	2	18	0	**43CP12A***		**43CP12B***		**43CP12W***		**43CP12F***		**43CP12H***		**43CP120***	
2	3	27	1	**43DP12A***		**43DP12B***		**43DP12W***		**43DP12F***		**43DP12H***		**43DP120***	
3	5	35	1P	**43EP12A***		**43EP12B***		**43EP12W***		**43EP12F***		**43EP12H***		**43EP120***	

Note: Hp's shown above are based on the overload amp range for the FLA's (per the National Electric Code) of typical industrial motors. All starter sizes carry one maximum Hp rating.

① Dual voltage coils not available in size 5–8 starters.

② For conduit hubs and conversion instructions, see page 17-112.

③ Enclosure is NEMA Type 4 (painted steel).

④ Coils D, F, or G will be wired for incoming voltage. J coil will be wired for separate source. Coils E, H, and L do not apply to single phase starters.

⑤ Only available
F coil 100-250V AC 50/60Hz, or DC
H coil 150-500V AC 50/60Hz, or DC

⑥ Only available
F coil 100-250V AC 50/60Hz, or DC

⑦ Auxiliary contacts
43B-43E 4th pole built-in
43F-43J 2 NO & 2 NC

Class
48 — Overload

Size
A — Frame A
B — Frame B

Model
T — ESP200

Current Range
A — 0.25–1①
B — 0.75–3.4①
C — 3–12①
D — 5.5–22①
E — 10–40
F — 13–52
G — 25–100
H — 50–200
J — 100–300 (3.33-10 current range with 300:5 CT and 1 loop with frame A1 (3-12A)-device)
K — 133–400 (3.33-10 current range with 400:5 CT and 1 loop with frame A1 (3-12A)-device)
L — 200–600 (3.33-10 current range with 600:5 CT and 1 loop with frame A1 (3-12A)-device)
M — 250–750 (3.33-10 current range with 750:5 CT and 1 loop with frame A1 (3-12A)-device)
N — 400–1200 (3.33-10.17 currant range with 1200:5 CT and 1 loop with frame A1 (3-12A)-device)

No. of Poles
3 — 3 Phase
1 — Single Phase

Reset
S — Selectable (Man/Auto)

Trip Curve
00 — Class 5, 10, 20 or 30 Selectable

Class
958 — Overload

Amp Range
E — 10–40
G — 25–100
H — 50–200

Model
B — ESP200

No. of Poles
3 — 3 phase

Type
S — Selectable (Man/Auto)

Trip Curve
A — 958

Class
958L — Overload

Amp Range
D — 5.5–22
E — 10–40
F — 13–52
G — 25–100
H — 50–200

Model
B — ESP200

No. of Poles
3 — 3 phase

Type
S — Selectable (Man/Auto)

Trip Curve
A — 958L

① Ranges available in Single or 3-phase.

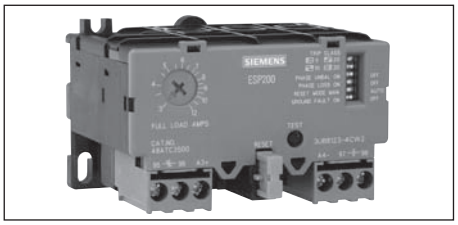

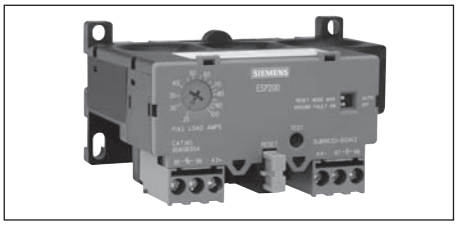

Features	Benefits
▪ Trip Classes - 5, 10, 20, or 30 Selectable by DIP-switches	▪ Field changeable reduces time and inventory. Suitable for light, normal and heavy starting conditions
▪ Phase Loss Protection - Trips in less than 3 Seconds	▪ Protects motor burn out and minimizes motor heating up
▪ Phase Unbalance - Trips based on Trip Class selected	▪ Minimizes temperature rise of the motor on a asymmetrical three-phase-system
▪ Ground Fault - Trips 60% of Motor Current	▪ Provides optimum system protection of motors against high-resistance short-circuits or ground faults due to moisture, condensation, damage of insulation or any other reason
▪ Trip Indicator - Visible	▪ Save time, faster to identify overload Trip
▪ Ambient Insensitive	▪ Prevents nuisance tripping
▪ No Heaters Required	▪ Saves cost and eliminates time for installation of heaters
▪ Self-Powered - No outside source required	▪ Reduce cost for external power supply
▪ FLA dial with wide Adjustment - 4:1 ratio	▪ Provides wide range, reduces inventory
▪ Self Protected in short circuit condition (when used with proper fuses or motor starter protector)	▪ Unlike bimetal overloads, this eliminates replacement of the overload heaters after short circuit
▪ Test Button - Tests Electronics	▪ Tests the complete electronic functions including the trip mechanism. Increases up time
▪ Thermal Memory	▪ Prevents re-starting motor when it is still hot
▪ Conformally coated circuit board	▪ Resists against environmental conditions
▪ 1 NO and 1NC Contacts Standard. B600, R300	▪ Makes it easier for user to wire local contacts
▪ Operating Temperature: -25 °C - 65 °C	▪ Wide operating temperature range prevents nuisance tripping with temperature changes
▪ Repeat Accuracy <1%.	▪ For more precise settings and reduced nuisance tripping
▪ Removable Terminal Block	▪ Terminal Block can be removed without removing wires. Saves time for replacements
▪ Automatic reset	▪ Auto. Reset is 3 minutes after tripping, allowing motor to cool down before re-start. If Manual Reset is selected, overload can be reset immediately
▪ Remote reset	▪ As an alternative to the mechanical RESET options, an electrical remote RESET can be used by applying 24 V DC to terminals A3 and A4
▪ DIN Rail Mounted	▪ Reduces installation time
▪ Touch - Safe Terminals	▪ Protects against accidental touching of live circuits
▪ UL listed CSA certified	▪ Third party approval standard

ESP200 Solid State Overload

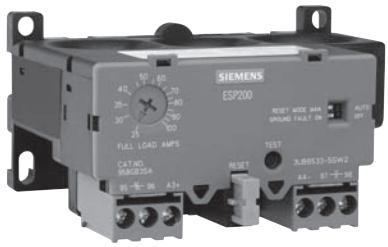

958 or 958L Solid State Overload

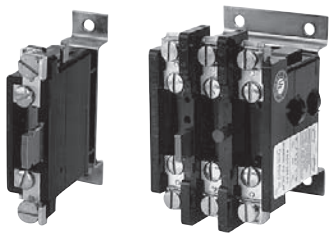

Ambient Compensated Bimetal Single Phase and Three Phase

Applications

ESP200 Solid State Overloads

Designed for a wide variety of applications. The field selectable Trip Class 5, 10, 20 or 30 can easily be set by 2 DIP switches. This eliminates the guess factor of an application requirements and provides reduced inventory for multiple applications. The inherent benefits of the ESP200 ultimately results in cost savings for the user.

ESP200 has a 4:1 current adjustment range with a fine adjustment dial labeled in full load amps. The heaterless overload minimizes the heat trapped in the enclosures, reduces cost for ventilation or cooling. Easily accessible Reset button, provides visible and audible indications to ensure the tripped overload is ready to re-start.

Designed to replace thermal, or ESP100 overload relays for any application. It has the same dimensions and footprint of the ESP100 overload relays. It can be directly coupled to the contactors or remotely mounted. In addition to the NEMA contactor applications, it also can be used with other types of controllers for applications requiring DP or IEC contactors. As a retrofit for other brands, it is used with a plate available for retrofitting competitive products.

958 ESP200 Special Use Solid State Overloads

This overload is specifically designed for special applications, to provide excellent protection of hermetically sealed and artificially cooled motors that require ambient insensitive and quick trip response times. Combined with a series lockout relay, it provides unsurpassed protection for hermetically sealed compressor motors in air conditioning applications. The combination of high trip speed, current adjustment, and ease of installation makes it suitable for these applications. The trip curves are customized to provide proper overload protection for these loads without causing nuisance tripping.

It has selectable manual or automatic reset mode, and provides ground fault selection to protect equipment from damage in case of a fault.

958L ESP200 Oil Field Solid State Overloads

Specifically designed for the oil market and the cycling loads experienced with these types of pumping applications. These overload relays provide protection for standard motors, oil well pump motors, multi-torque connections, and ultra-high slip motors.

Rotors can be damaged in less than 15 seconds during motor stall conditions if electrical power is not removed. To prevent damage during motor stall, the 958L solid state overload removes the power in 7 seconds at 250% lock rotor current. Therefore, the motor casing and the rotor will be protected from being damage saving the user money and time.

- **Ambient Compensated Bimetal Overloads**
  - —Automatic or manual reset adjustment
  - —A manual test button is provided to test the operation of the 3-pole overload relay control contacts
  - —±15% nominal trip current adjustment
  - —Accept either standard Class 20 or Quick Trip (NEMA Class 10) heater elements without any other changes or adjustments
  - —Available with a normally open contact for an alarm circuit (SPDT) up to 60A
  - —Compensated bimetal overload relays provide a constant trip time in ambient temperatures from –20°F to +170°F for a given heater rating
- UL Listed File #E22655 or Component Recognized
- CSA Certified File #LR6535

Ambient Compensated Bimetal Overloads

These thermal type overload relays are used to protect motors from excessive heat resulting from sustained motor overloads, rapid motor cycling and stalled rotor conditions. Although these devices function based on thermal principles they are designed to compensate for the ambient air temperature surrounding the overload. This helps prevent the occurrence of nuisance tripping when there are high surrounding ambient temperatures. The percentage of overload determines the length of time required to open the circuit.

3-Phase, 48ATC3S00

Ordering Information

- ► For CT's see Accessories page 17-69.
- ► Dimensions see page 17-148.
- ► To retrofit or direct mount to a contactor, order 49ASMP1, 2, or 3 separately. See Retrofit Plates below.
- ► For remote mounting of frame size A order 49ASMS1 terminals separately, see page 17-110.

Solid State—Class 48

Current Adjustment Range	Phase	Frame Size	Catalog Number	MRPD/MLFB	List Price $
0.25–1	3	"A"	**48ATA3S00**	**3UB81134AB2**	
0.75–3.4	3	"A"	**48ATB3S00**	**3UB81134BB2**	
3–12	3	"A1"	**48ATC3S00**	**3UB81234CW2**	
5.5–22	3	"A1"	**48ATD3S00**	**3UB81234DW2**	
10–40	3	"A1"	**48ATE3S00**	**3UB81234EW2**	
13–52	3	"B"	**48BTF3S00**	**3UB81334FW2**	
25–100	3	"B"	**48BTG3S00**	**3UB81334GW2**	
50–200	3	"B"	**48BTH3S00**	**3UB81334HW2**	
100–300	3	"A1" ②	**48ATJ3S00**	**3UB81234JW2**	
133–400	3	"A1" ⑧	**48ATK3S00**	**3UB81234KW2**	
200–600	3	"A1" ④	**48ATL3S00**	**3UB81234LW2**	
250–750	3	"A1" ⑦	**48ATM3S00**	**3UB81234MW2**	
400–1220	3	"A1" ⑤	**48ATN3S00**	**3UB81234NW2**	
0.25–1	1	"A"	**48ATA1S00**	**3UB88134AB2**	
0.75–3.4	1	"A"	**48ATB1S00**	**3UB88134BB2**	
3–12	1	"A1"	**48ATC1S00**	**3UB88234CW2**	
5.5–22	1	"A1"	**48ATD1S00**	**3UB88234DW2**	
25-100	1	"B"	**48BTG1S00**	**3UB88334GW2**	

Solid State—3RB206③⑥, 3-Phase, Manual/Auto Reset

For Contactor Size	Setting Range Amps	Class 10 Catalog Number	List Price $	Class 20 Catalog Number	List Price $
5	55 - 250	**3RB2066-1GC2**		**3RB2066-2GC2**	
6	160 - 630	**3RB2066-1MC2**		**3RB2066-2MC2**	

Retrofit Plates for Contactors, Class 48

Replacement for Starter Sizes	ESP200 Overload Frame Size①	Retrofit Plate Suffix	Plate Kit Separate	Price Adder $
Size 00–1¾ Size 2, 2½	A or A1 B	1P 2P	**49ASMP1** **49ASMP2**	
Size 3, 3½ Size 4	B B	3P 4P	**49ASMP3** **49ASMP3**	

Ambient Compensated Bimetal—Open Type Class 48 Single Phase, 3-Phase (Panel Mount Only)

Poles	Amp Rating	Auxiliary Contacts	Contact Rating	Catalog Number	List Price $
1	25 60 100 180	1 NC 1 NC 1 NC 1 NC	5A (B600) & 5A (P300)	**48DA18AA4** **48GA18AA4** **48HA18AA4** **48JA18AA4**	
3	30 30 60 60	1 NC 1 NO/NC 1 NC 1 NO/NC	10A (A600) & 5A (P300)	**48DC38AA4** **48DC39AA4** **48GC38AA4** **48GC39AA4**	
	100 180	3 NC 3 NC	5A (B600) & 5A (P300)	**48HA38AA4** **48JA38AA4**	

① To determine frame size of replacement solid state overload, refer to retrofit plates table above.
② Requires use of 300:5 Current Transformers–3 of **97CT005**.
③ Product Category: IEC.
④ Requires use of 600:5 Current Transformers–3 of **97CT008**.
⑤ Requires use of 1200:5 Current Transformers–3 of **97CT012**.
⑥ Overload has busbar connections.
⑦ Requires use of 750:5 Current Transformers–3 of **97CT009**.
⑧ Requires use of 400:5 Current Transformers–3 of **97CT006**.

Class 958, 958L

Ordering Information

► Dimensions see page 17-148.

Current Transformers

Rating	Catalog No.	List Price $
150:5	**97CT002**	
200:5	**97CT003**	
250:5	**97CT004**	
300:5	**97CT005**	
400:5	**97CT006**	
600:5	**97CT008**	
750:5	**97CT009**	
1200:5	**97CT012**	

Solid State—Class 958 and 958L

Current Adjustment Range	Phase	Frame Size	Catalog Number	MRPD/MLFB	List Price $
10–40	3	"A1"	**958EB3SA**	**3UB85235EW2**	
25–100	3	"B"	**958GB3SA**	**3UB85335GW2**	
50–200	3	"B"	**958HB3SA**	**3UB85335HW2**	
5.5–22	3	"A1"	**958LDB3SA**	**3UB85236DW2**	
10–40	3	"A1"	**958LEB3SA**	**3UB85236EW2**	
13–52	3	"B"	**958LFB3SA**	**3UB85336FW2**	
25–100	3	"B"	**958LGB3SA**	**3UB85336GW2**	
50–200	3	"B"	**958LHB3SA**	**3UB85336HW2**	

Time - Current - Characteristics CLASS 48

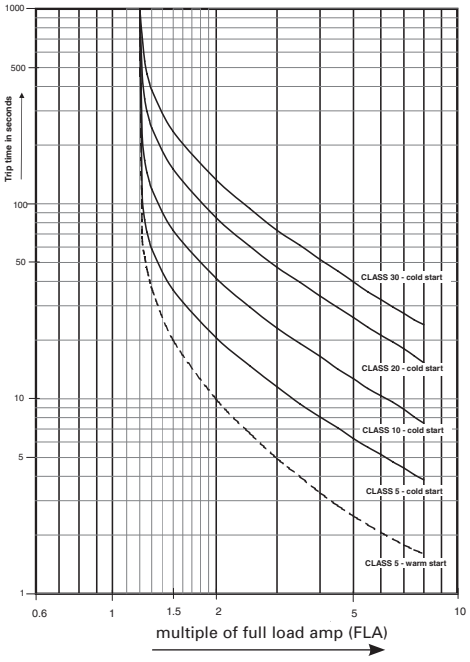

Time - Current - Characteristics CLASS 958, 958L

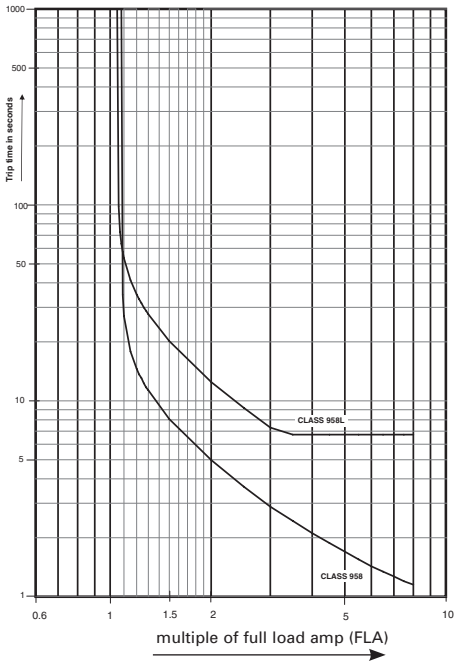

Trip - curve depending on unbalance CLASS 20

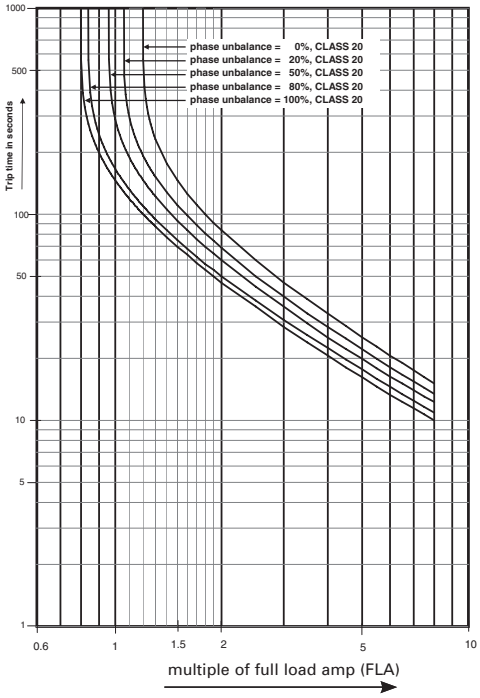

① Temperature rating −25° to +60°C.

Features

The Class 82 Slim Line NEMA Pump was designed specifically for the agricultural market. It is well suited for irrigation and similar pumping applications and is built to withstand the harsh elements of the outdoors

Typical applications include:

- Crop irrigation
- Sprinklers, misters and soakers
- Watering for livestock and other dairy applications
- Ground dewatering for excavation and construction sites

Why you should use the Class 82 Pump Panel

- Simplicity and its compact lightweight design makes this an attractive solution to your budgeting challenges.
- The contactor is NEMA rated to provide reliable motor control and protection expected in the most demanding applications.
- The ESP200 solid-state overload relay has a protective coating on the circuit board which gives it superior protection against high humidity, condensation and corrosive environments.
- Its size and weight is about half that of the Class 87 which increases the ease of installation.

Catalog Numbering System

82	A	D	C	6	F	B	H

Series

A = Standard size enclosure
B = Extra large enclosure (starter size 1 only)

Starter Size

D = 1
F = 2

OLR Current Range

B = 0.75-3.4A
C = 3-12A
D = 5.5-22A
E = 10-40A
F = 13-52A

Cover Control

6 = HOA selector switch with Start push button

Disconnect Type

F = Fusible disconnect

Disconnect & Fuse Clip Rating

A = 30A/250V
B = 30A/600V
C = 60A/250V
D = 60A/600V

Coil Voltage

F = 110VAC 50HZ / 120VAC 60HZ
G = 220VAC 50HZ / 240VAC 60HZ
H = 480VAC 60HZ

Pump Control Panels

Slim Line NEMA Pump Controller for the Agricultural industry, Class 82

General

Ordering Information

- Field Modification Kits (see accessories on this page)
- Factory Modifications (NA)
- Dimensions see page 17-169
- Wiring Diagram see page 17-189
- Replacement Parts (refer to instruction sheet A5E35327591A)

Coil Table

50/60Hz Voltage	Letter
110VAC 50HZ / 120VAC 60HZ	F
220VAC 50HZ / 240VAC 60HZ	G①
480VAC 60HZ	H②

Product Selection

Max Hp Rating Motor Voltage		NEMA Size	Overload Relay Amp Range	Disc. Amp Rating	Fuse Clip Amp/Volts	HOA & Start Push Button		HOA & Start Push Button (Extra wide Encl)	
230	460					Catalog Number	List Price $	Catalog Number	List Price $
—	1	1	0.75–3.4	30	30A/600V	**82ADB6FB***		**82BDB6FB***③	
—	5	1	3–12	30	30A/600V	**82ADC6FB***		**82BDC6FB***③	
—	10	1	5.5–22	30	30A/600V	**82ADD6FB***		**82BDD6FB***③	
—	10	1	10–40	30	30A/600V	**—**		**82BDE6FB***③	
2	—	1	3–12	30	30A/250V	**82ADC6FA***		**82BDC6FA***③	
3	—	1	5.5–22	30	30A/250V	**82ADD6FA***		**82BDD6FA***③	
7 1/2	—	1	10–40	30	30A/250V	**82ADE6FA***		**82BDE6FA***③	
—	25	2	13-52	60	60A/600V	**82AFF6FD***③		—	
15	—	2	13-52	60	60A/250V	**82AFF6FC***③		—	

Replace the (*) with a letter from the coil table.
③ Available in May 2017.

Accessories

Image	Description	Catalog Number	List Price
	3/4" type 3R conduit hub	**ECHS075**	
	1" type 3R conduit hub	**ECHS100**	
	1 1/4" type 3R conduit hub	**ECHS125**	
	1 1/2" type 3R conduit hub	**ECHS150**	
	Disconnect switch auxiliary contacts 2 NO/2 NC DPDT (NEMA A600)	**HA261234**	
	Fuse puller kit for 30A switch (1 kit required per switch)	**HP61**	
	30A, 240V Class R Fuse Clip Kits	**HR21**	
	30A, 600V Class R Fuse Clip Kits	**HR612**	

Image	Description	Catalog Number	List Price
	Contactor auxiliary contacts, side mounted 1 NO/NC (NEMA A300/ Q300)	**3RH29111DA11**	
	ESP200 tamper resistance cover	**49ASTC1**	

① G coil is not available with a 600v disconnect
② H coil is not available with a 250v disconnect

Class 82 Technical information

General Technical Data:	
Weight	Size 1 (Standard Encl.) 23lbs. Size 1 (Extra Wide Encl.) 47lbs. Size 2 (Standard Encl.) 47lbs.
Height x Width x Depth	Size 1 (Standard Encl.) 26 x 12 x 5in. Size 1 (Extra Wide Encl.) 35 x 17 x 6in. Size 2 (Standard Encl.) 35 x 17 x 6in.
Maximum altitude	6560 ft.
Ambient (outside enclosure) storage temperature	(-30 to 65)°C / (-22 to 149)°F
Ambient (outside enclosure) operating temperature	(-20 to 40)°C / (-4 to 104)°F
Country of origin	Mexico
Horsepower Rating:	
See selection table above	See selection table above
Contactor:	
Number of NO main contacts	3
Amp rating	32A, 50A
Mechanical operating cycles	10,000,000
Internal / Standard Auxiliary Contact:	
Number of NC / NO auxiliary contacts	1NC / 1NO
NEMA contact rating designation	A600 AC / Q600 DC
Optional auxiliary contacts available	Yes
Coil:	
Voltage	220/230V 50/60Hz, 460V 60Hz, or 110/120V 50/60Hz
Apparent pull-in / holding power	81 VA / 10.5 VA
Normal coil operating limits (% of rated voltage)	80% - 110% at 60Hz
Pick-up time / Drop-out time	8-40 / 4-16 msec
Overload Relay:	
Current range	0.75 - 3.4 or 3 - 12 or 5.5 - 22 or 10 - 40 Amps or 13 - 52 Amps
Trip Class	Class 5 / 10 (factory set) / 20 / 30
Trip detection	Overload, phase failure, phase unbalance, ground fault
Phase failure sensitivity	Trip time after phase loss: < 3 sec
Repeat accuracy	Within 1%
Reset options	Manual, automatic and remote
External reset	Yes
Test function	Electronics and manual actuation
Conformal coating on printed circuit board	Yes
Number of NC / NO auxiliary contacts	1NC /1NO
Rating of auxiliary contacts	B600 AC / R300 DC
Single contact isolation	600 V
Dual contact isolation	300 V differing polarity / 600 V common polarity

Class 82 Technical information

Disconnect Switch:	
Rating	30 A with 30A/600 or 30A/250 V Class H fuse clips 60 A with 60A/600 or 60A/250 V Class H fuse clips
Fuse type accepted	Class H, J or R
Enclosure:	
Type	NEMA Type 3/3R enclosure
Rating	Weather proof for outdoor use
Standard Control Devices:	
Hand-Off-Auto selector switch	3SU1 30mm, round, metal with matte finish
Start push button	3SU1 30mm, round, metal with matte finish
Mounting / Wiring:	
Mounting orientation	Vertical
Mounting type	Pole and surface
Disconnect line side connection type / torque	Box lug / 35 lb in (14 - 10); 40 lb in (8); 45 lb in (6 - 4) AWG
Disconnect line side solid and stranded conductors	1x(14 - 2 AWG) 60/75°C AL or CU
Power terminal block connection type / torque	Screw / 24 - 32 lb - in
Power terminal block solid and stranded conductors	1x(18 - 2 AWG) 75°C CU
Control terminal block connection type / torque	Screw / 12 - 18 lb - in
Control terminal block solid and stranded conductors	1x(22 - 8 AWG) 75°C CU
Coil connection type / torque	Screw / 7 - 10 lb in
Coil solid and standed conductors	2x(16 - 12 AWG) CU 60/75°C
Main auxiliary contact connection type / torque	Screw / 7 - 10 lb in
Main auxiliary contact solid and stranded conductors	2x(20 - 16), 2x(18 - 14) 75°C CU
OLR auxiliary contact connection type / torque	Screw / 7 - 10 lb in
OLR auxiliary contact solid and starnded conductors	2x(20 - 14 AWG) CU 60/75°C
Short Circuit Current Rating:	
Fuses	10kA@600V (Class H or K); 85kA@600V (Class R or J)
Certificates / Approvals:	
cULus	UL (file no. E185287)
UL rated Service Entrance Equipment	ISO 9001 certification

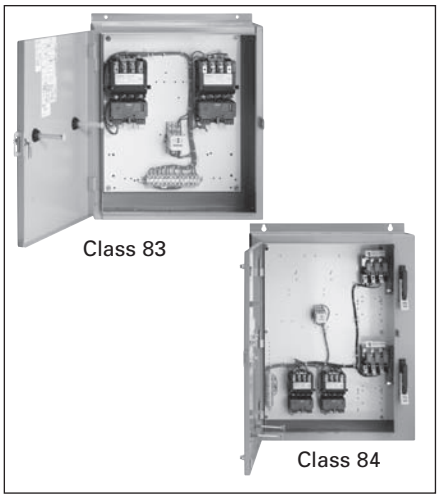

Features

- Heavy Duty NEMA Starters
- Solid State or Thermal Overload Relays
- Fusible or MCP
- Heavy Duty Disconnect Handle
- Flexibility with Field Modifications
- Alternator Transfer on De-energization
- UL Listed for Outdoor Use
- UL Listed file #E14900 (class 83); file #E185287 (class 84)
- CSA certified file #LR 6535 (class 83 & 84)

Application

Duplex pump controls are designed to perform one or both of two distinct functions: duplexing and alternation. The duplexing function provides capacity for system peaking or above normal demand without having the full motor capacity spinning at all times. It also provides standby capacity for use when one of the motors or pumps is disabled. The duplexing function is also referred to as lead/lag or main/standby. When two pumps or compressors are controlled by a duplex controller, they are started in sequence as necessary to attain preset values of pressure, flow or liquid level.

Two field devices such as pressure switches or float switches provide electrical signals to the duplex controller. One remote device is set to initiate the starting of the lead motor. This motor is rated to handle normal system demand. The second motor is usually the same rating and is referred to as the lag motor. It is only energized when the system demand is greater than the capacity of the lead motor. The lag motor is started when the second remote device is signalling for more output than the lead motor can produce.

The alternation function reverses the lead and lag mode for the two motors in a duplex system. Upon alternation the first motor as described above becomes the lag motor and the second motor assumes the lead function. The alternation is usually programmed to occur at any time both pumps come to rest. The alternation function equalizes wear on the two machines and extends the life of seals and bearings.

Enclosure Types

Duplex controllers are available in NEMA 1, 12/3/3R, 4 (painted) and 4/4X (stainless) enclosures. Enclosures protect personnel from contact with live parts and depending upon the construction, protect the control in varying degrees from physical damage and harmful atmospheres. All enclosures are supplied with corrosion resistant finishes.

Heavy Duty Starters

These Duplex controllers use the same starters described in the heavy duty starter section of this catalog.

Siemens Type ETI Circuit Breaker

The ETI circuit breaker is a device designed specifically for application in motor circuits. The ETI is a magnetic only protective device designed to provide protection against short circuit current.

The instantaneous-only type ETI circuit breaker employs adjustable magnetic trip settings to allow broader application ranges and a higher degree of motor short circuit protection.

Features

Two control transformers may be provided for low voltage control to safeguard personnel from high voltage. One transformer is required for each starter to provide independent control circuits.

A Hand-Off-Auto selector switch for each starter may be mounted in the enclosure door or furnished separately for remote control. Test push buttons or pilot lights may also be installed on the enclosure.

Solid-state or Ambient Compensated Bimetal Overload Relays are supplied as standard.

Heavy Duty Disconnect Switches

The disconnect switch that goes the distance in durability, performance and reliability has the following advantages:

- Visible blades for the highest level of safety
- Double break switching action to reduce arcing, increase lifetime and eliminate the “electric hinge”
- More rugged positive action switch
- Oversized lugs are standard
- Line side shield to help guard personnel from contact with live parts
- Higher horsepower rating for design E high efficiency motors
- UL listed for Ilsco, Burndy and T&B crimp type lugs
- The 200A switch accepts up to 300 MCM versus 250 MCM wire size

Its rugged construction - with a high fault withstand rating of 100kA at 600 VAC when fused with class R rated fuses - meets the most stringent industry standards set forth by the automotive, petro-chemical, and pulp and paper industries. UL recognized and CSA certified, our disconnect switches are available either non-fusible or fusible with class R and class J fuse clips.

Ordering Information

- Standard duplex controllers include an alternator indicated by characters "92" within the catalog number. The standard coil voltage supplied with the alternator is 120V separate control. This is the only control voltage available with the alternator.
- To omit the alternator, change the character string within the catalog number from "92" to "95". All coil voltages listed in the coil table are valid with non-alternator controllers.
- To change the coil voltage for non-alternator controllers with a solid-state OLR, change the 9th character in the catalog number with a letter shown in the coil table. To change the coil voltage for non-alternator controllers with a bimetal OLR, change the 8th character in the catalog number with a letter shown in the coil table.
- Heater elements for bimetal overloads see page 17-126 (6-Required).
- Field Modification Kits see page 17-106.
- Factory Modifications see page 17-121.
- Dimensions see page 17-170.
- Wiring Diagrams see page 17-187.
- Replacement Parts see page 17-133.

Coil Table

60Hz Voltage	Letter
24②	J
120	F
200–208②	D
220–240②	G
277②	L
440–480②	H
550–600②	E

Non-Combination (with Solid-State Overload)

Max Hp						Overload		Enclosure							
								NEMA 1 General Purpose		NEMA 4/4X Stainless Watertight, Dust-tight, Corrosion Resistant 304 Stainless Steel		NEMA 4 Painted Watertight, Dust-tight		NEMA 12 NEMA 3/3R① Industrial Use Weatherproof (Field Convertible to 3/3R)	
200 Volts	230 Volts	460 Volts	575 Volts	NEMA Size	Half Size	Amp Range	Frame Size	Catalog Number	List Price $	Catalog Number	List Price $	Catalog Number	List Price $	Catalog Number	List Price $
⅛	⅛	⅓	½	0	—	0.25–1	A	**83CUA92BF**		**83CUA92WF**		**83CUA92EF**		**83CUA920F**	
½	¾	1½	2	0	—	0.75–3.4	A	**83CUB92BF**		**83CUB92WF**		**83CUB92EF**		**83CUB920F**	
2	2	5	5	0	—	3–12	A1	**83CUC92BF**		**83CUC92WF**		**83CUC92EF**		**83CUC920F**	
3	3	—	—	0	—	5.5–22	A1	**83CUD92BF**		**83CUD92WF**		**83CUD92EF**		**83CUD920F**	
⅛	⅛	⅓	½	1	—	0.25–1	A	**83DUA92BF**		**83DUA92WF**		**83DUA92EF**		**83DUA920F**	
½	¾	1½	2	1	—	0.75–3.4	A	**83DUB92BF**		**83DUB92WF**		**83DUB92EF**		**83DUB920F**	
2	2	5	5	1	—	3–12	A1	**83DUC92BF**		**83DUC92WF**		**83DUC92EF**		**83DUC920F**	
3	3	10	10	1	—	5.5–22	A1	**83DUD92BF**		**83DUD92WF**		**83DUD92EF**		**83DUD920F**	
7½	7½	—	—	1	—	10–40	A1	**83DUE92BF**		**83DUE92WF**		**83DUE92EF**		**83DUE920F**	
10	10	15	15	—	1¾	10–40	A1	**83EUE92BF**		**83EUE92WF**		**83EUE92EF**		**83EUE920F**	
10	15	25	25	2	—	13–52	B	**83FUF92BF**		**83FUF92WF**		**83FUF92EF**		**83FUF920F**	
15	20	30	30	—	2½	25–100	B	**83GUG92BF**		**83GUG92WF**		**83GUG92EF**		**83GUG920F**	
25	30	50	50	3	—	25–100	B	**83HUG92BF**		**83HUG92WF**		**83HUG92EF**		**83HUG920F**	
30	40	75	75	—	3½	50–200	B	**83IUH92BF**		**83IUH92WF**		**83IUH92EF**		**83IUH920F**	
40	50	100	100	4	—	50–200	B	**83JUH92BF**		**83JUH92WF**		**83JUH92EF**		**83JUH920F**	

Non-Combination (with Ambient Compensated Bimetal Overload)

Max Hp						Enclosure							
						NEMA 1 General Purpose		NEMA 4/4X Stainless Watertight, Dust-tight Corrosion Resistant 304 Stainless Steel		NEMA 4 Painted Watertight Dust-tight		NEMA 12/3R① Industrial Use Weatherproof	
200 Volts	230 Volts	460 Volts	575 Volts	NEMA Size	Half Size	Catalog Number	List Price $	Catalog Number	List Price $	Catalog Number	List Price $	Catalog Number	List Price $
3	3	5	5	0	—	**83CP92BF81**		**83CP92WF81**		**83CP92EF81**		**83CP920F81**	
7½	7½	10	10	1	—	**83DP92BF81**		**83DP92WF81**		**83DP92EF81**		**83DP920F81**	
10	10	15	15	—	1¾	**83EP92BF81**		**83EP92WF81**		**83EP92EF81**		**83EP920F81**	
10	15	25	25	2	—	**83FP92BF81**		**83FP92WF81**		**83FP92EF81**		**83FP920F81**	
15	20	30	30	—	2½	**83GP92BF81**		**83GP92WF81**		**83GP92EF81**		**83GP920F81**	
25	30	50	50	3	—	**83HP92BF81**		**83HP92WF81**		**83HP92EF81**		**83HP920F81**	
30	40	75	75	—	3½	**83IP92BF81**		**83IP92WF81**		**83IP92EF81**		**83IP920F81**	
40	50	100	100	4	—	**83JP92BF81**		**83JP92WF81**		**83JP92EF81**		**83JP920F81**	

Note: Hp's shown above are based on the overload amp range for the FLA's (per the National Electric Code) of typical industrial motors. All starter sizes carry one maximum Hp rating.

① NEMA 12 is field convertible to NEMA 3/3R. For conduit hubs and conversion instructions, see page 17-112.
② Not available on standard alternator style ('92' in the catalog number).
③ For NO/NC SPDT contact on overload, replace "81" with "91". "81" will give a NC contact.

Ordering Information

- Standard duplex controllers include an alternator indicated by characters "92" within the catalog number. The standard coil voltage supplied with the alternator is 120V separate control. This is the only control voltage available with the alternator.
- To omit the alternator, change the character string within the catalog number from "92" to "95". All coil voltages listed in the coil table are valid with non-alternator controllers.
- To change the coil voltage for non-alternator controllers with a solid-state OLR, change the 10th character in the catalog number with a letter shown in the coil table. To change the coil voltage for non-alternator controllers with a bimetal OLR, change the 9th character in the catalog number with a letter shown in the coil table.
- Heater elements for bimetal overloads see page 17-126 (6-Required).
- For factory installed fusible disconnect, see page 17-122.
- Field Modification Kits see page 17-106.
- Factory Modifications see page 17-121.
- Dimensions see page 17-170.
- Wiring Diagrams see page 17-187.
- Replacement Parts see page 17-133.

Coil Table

60Hz Voltage	Letter
24②	J
120	F
200–208②	D
220–240②	G
277②	L
440–480②	H
550–600②	E

Two Disconnect Switches with Solid-State Overload

Max Hp						Overload			Enclosure							
									NEMA 1 General Purpose		NEMA 4/4X Stainless Watertight, Dust-tight, Corrosion Resistant 304 Stainless Steel		NEMA 4 Painted Watertight, Dust-tight		NEMA 12 NEMA 3/3R① Industrial Use Weatherproof (Field Convertible to 3/3R)	
200 Volts	230 Volts	460 Volts	575 Volts	NEMA Size	Half Size	Amp Range	Frame Size	Disc. Amp Range	Catalog Number	List Price $	Catalog Number	List Price $	Catalog Number	List Price $	Catalog Number	List Price $
⅛	⅛	⅓	½	0	—	0.25–1	A	30	**84CUA92BDF**		**84CUA92WDF**		**84CUA92EDF**		**84CUA920DF**	
½	¾	1½	2	0	—	0.75–3.4	A	30	**84CUB92BDF**		**84CUB92WDF**		**84CUB92EDF**		**84CUB920DF**	
2	2	5	5	0	—	3–12	A1	30	**84CUC92BDF**		**84CUC92WDF**		**84CUC92EDF**		**84CUC920DF**	
3	3	—	—	0	—	5.5–22	A1	30	**84CUD92BDF**		**84CUD92WDF**		**84CUD92EDF**		**84CUD920DF**	
⅛	⅛	⅓	½	1	—	0.25–1	A	30	**84DUA92BDF**		**84DUA92WDF**		**84DUA92EDF**		**84DUA920DF**	
½	¾	1½	2	1	—	0.75–3.4	A	30	**84DUB92BDF**		**84DUB92WDF**		**84DUB92EDF**		**84DUB920DF**	
2	2	5	5	1	—	3–12	A1	30	**84DUC92BDF**		**84DUC92WDF**		**84DUC92EDF**		**84DUC920DF**	
3	3	10	10	1	—	5.5–22	A1	30	**84DUD92BDF**		**84DUD92WDF**		**84DUD92EDF**		**84DUD920DF**	
7½	7½	—	—	1	—	10–40	A1	30	**84DUE92BDF**		**84DUE92WDF**		**84DUE92EDF**		**84DUE920DF**	
10	10	15	15	—	1¾	10–40	A1	60	**84EUE92BDF**		**84EUE92WDF**		**84EUE92EDF**		**84EUE920DF**	
10	15	25	25	2	—	13–52	B	60	**84FUF92BDF**		**84FUF92WDF**		**84FUF92EDF**		**84FUF920DF**	
15	20	30	30	—	2½	25–100	B	100	**84GUG92BDF**		**84GUG92WDF**		**84GUG92EDF**		**84GUG920DF**	
20	25	50	50	3	—	25–100	B	100	**84HUG92BDF**		**84HUG92WDF**		**84HUG92EDF**		**84HUG920DF**	
30	40	75	75	—	3½	50–200	B	200	**84IUH92BDF**		**84IUH92WDF**		**84IUH92EDF**		**84IUH920DF**	
40	50	100	100	4	—	50–200	B	200	**84JUH92BDF**		**84JUH92WDF**		**84JUH92EDF**		**84JUH920DF**	

Two Disconnect Switches with Ambient Compensated Bimetal Overload

Max Hp							Enclosure							
							NEMA 1 General Purpose		NEMA 4/4X Stainless Watertight, Dust-tight Corrosion Resistant 304 Stainless Steel		NEMA 4 Painted Watertight Dust-tight		NEMA 12/3R① Industrial Use Weatherproof	
200 Volts	230 Volts	460 Volts	575 Volts	NEMA Size	Half Size	Disc Amp Range	Catalog Number	List Price $	Catalog Number	List Price $	Catalog Number	List Price $	Catalog Number	List Price $
3	3	5	5	0	—	30	**84CP92BDF81**		**84CP92WDF81**		**84CP92EDF81**		**84CP920DF81**	
7½	7½	10	10	1	—	30	**84DP92BDF81**		**84DP92WDF81**		**84DP92EDF81**		**84DP920DF81**	
10	10	15	15	—	1¾	60	**84EP92BDF81**		**84EP92WDF81**		**84EP92EDF81**		**84EP920DF81**	
10	15	25	25	2	—	60	**84FP92BDF81**		**84FP92WDF81**		**84FP92EDF81**		**84FP920DF81**	
15	20	30	30	—	2½	100	**84GP92BDF81**		**84GP92WDF81**		**84GP92EDF81**		**84GP920DF81**	
20	25	50	50	3	—	100	**84HP92BDF81**		**84HP92WDF81**		**84HP92EDF81**		**84HP920DF81**	
30	40	75	75	—	3½	200	**84IP92BDF81**		**84IP92WDF81**		**84IP92EDF81**		**84IP920DF81**	
40	50	100	100	4	—	200	**84JP92BDF81**		**84JP92WDF81**		**84JP92EDF81**		**84JP920DF81**	

Note: Hp's shown above are based on the overload amp range for the FLA's (per the National Electric Code) of typical industrial motors. All starter sizes carry one maximum Hp rating.

① NEMA 12 is field convertible to NEMA 3/3R. For conduit hubs and conversion instructions, see page 17-112.
② Not available on standard alternator style ('92' in the catalog number).
③ For NO/NC SPDT contact on overload, replace "81" with "91". "81" will give a NC contact.

Ordering Information

- Standard duplex controllers include an alternator indicated by characters "92" within the catalog number. The standard coil voltage supplied with the alternator is 120V separate control. This is the only control voltage available with the alternator.
- To omit the alternator, change the character string within the catalog number from "92" to "95". All coil voltages listed in the coil table are valid with non-alternator controllers.
- To change the coil voltage for non-alternator controllers, change the 10th character in the catalog number with a letter shown in the coil table.
- Heater elements for bimetal overloads see page 17-126 (6-Required).
- Field Modification Kits see page 17-106.
- Factory Modifications see page 17-121.
- Dimensions see page 17-170.
- Wiring Diagrams see page 17-187.
- Replacement Parts see page 17-133.

Coil Table

60Hz Voltage	Letter
24②	J
120	F
200–208②	D
220–240②	G
277②	L
440–480②	H
550–600②	E

2 Motor Circuit Protectors (with Solid-State Overload)

Max Hp						Overload			Enclosure							
									NEMA 1 General Purpose		NEMA 4/4X Stainless Watertight, Dust-tight, Corrosion Resistant , 304 Stainless Steel,		NEMA 4 Painted Watertight, Dust-tight		NEMA 12 NEMA 3/3R① Industrial Use, Weatherproof (Field Convertible to 3/3R)	
200 Volts	230 Volts	460 Volts	575 Volts	NEMA Size	Half Size	Amp Range	Frame Size	Motor Circuit Interrupter ETI	Catalog Number	List Price $	Catalog Number	List Price $	Catalog Number	List Price $	Catalog Number	List Price $
⅛	⅛	⅓	½	0	—	0.25–1	A	3	84CUA92BMF		84CUA92WMF		84CUA92EMF		84CUA920MF	
½	¾	1½	2	0	—	0.75–3.4	A	3	84CUB92BMF		84CUB92WMF		84CUB92EMF		84CUB920MF	
2	2	5	5	0	—	3–12	A1	10	84CUC92BMF		84CUC92WMF		84CUC92EMF		84CUC920MF	
3	3	—	—	0	—	5.5–22	A1	25	84CUD92BMF		84CUD92WMF		84CUD92EMF		84CUD920MF	
⅛	⅛	⅓	½	1	—	0.25–1	A	3	84DUA92BMF		84DUA92WMF		84DUA92EMF		84DUA920MF	
½	¾	1½	2	1	—	0.75–3.4	A	3	84DUB92BMF		84DUB92WMF		84DUB92EMF		84DUB920MF	
2	2	5	5	1	—	3–12	A1	10	84DUC92BMF		84DUC92WMF		84DUC92EMF		84DUC920MF	
3	3	10	10	1	—	5.5–22	A1	25	84DUD92BMF		84DUD92WMF		84DUD92EMF		84DUD920MF	
7½	7½	—	—	1	—	10–40	A1	30	84DUE92BMF		84DUE92WMF		84DUE92EMF		84DUE920MF	
—	—	15	15	—	1¾	10–40	A1	40	84EUE92BMF		84EUE92WMF		84EUE92EMF		84EUE920MF	
10	15	25	25	2	—	13–52	B	50	84FUF92BMF		84FUF92WMF		84FUF92EMF		84FUF920MF	
15	20	30	30	—	2½	25–100	B	100	84GUG92BMF		84GUG92WMF		84GUG92EMF		84GUG920MF	
20	25	50	50	3	—	25–100	B	100	84HUG92BMF		84HUG92WMF		84HUG92EMF		84HUG920MF	
30	40	75	75	—	3½	50–200	B	125	84IUH92BMF		84IUH92WMF		84IUH92EMF		84IUH920MF	
40	50	100	100	4	—	50–200	B	150	84JUH92BMF		84JUH92WMF		84JUH92EMF		84JUH920MF	

2 Motor Circuit Protectors (with Ambient Compensated Bimetal Overload)

Max Hp							Enclosure							
							NEMA 1 General Purpose		NEMA 4/4X Stainless Watertight, Dust-tight Corrosion Resistant 304 Stainless Steel		NEMA 4 Painted Watertight Dust-tight		NEMA 12/3R① Industrial Use Weatherproof	
200 Volts	230 Volts	460 Volts	575 Volts	NEMA Size	Half Size	Motor Circuit Interrupter ETI	Catalog Number	List Price $	Catalog Number	List Price $	Catalog Number	List Price $	Catalog Number	List Price $
½	¾	1½	2	0	—	3	84CPB92BMF81		84CPB92WMF81		84CPB92EMF81		84CPB920MF81	
2	2	5	5	0	—	10	84CPD92BMF81		84CPD92WMF81		84CPD92EMF81		84CPD920MF81	
3	3	—	—	0	—	25	84CPE92BMF81		84CPE92WMF81		84CPE92EMF81		84CPE920MF81	
½	¾	1½	2	1	—	3	84DPB92BMF81		84DPB92WMF81		84DPB92EMF81		84DPB920MF81	
2	2	5	5	1	—	10	84DPD92BMF81		84DPD92WMF81		84DPD92EMF81		84DPD920MF81	
3	3	10	10	1	—	25	84DPE92BMF81		84DPE92WMF81		84DPE92EMF81		84DPE920MF81	
7½	7½	—	—	1	—	30	84DPF92BMF81		84DPF92WMF81		84DPF92EMF81		84DPF920MF81	
—	—	15	15	—	1¾	40	84EPF92BMF81		84EPF92WMF81		84EPF92EMF81		84EPF920MF81	
10	10	—	—	—	1¾	50	84EPG92BMF81		84EPG92WMF81		84EPG92EMF81		84EPG920MF81	
—	—	15	20	2	—	40	84FPF92BMF81		84FPF92WMF81		84FPF92EMF81		84FPF920MF81	
10	15	25	25	2	—	50	84FPH92BMF81		84FPH92WMF81		84FPH92EMF81		84FPH920MF81	
—	—	30	30	—	2½	50	84GPH92BMF81		84GPH92WMF81		84GPH92EMF81		84GPH920MF81	
15	20	—	—	—	2½	100	84GPJ92BMF81		84GPJ92WMF81		84GPJ92EMF81		84GPJ920MF81	
—	—	30	40	3	—	50	84HPJ92BMF81		84HPJ92WMF81		84HPJ92EMF81		84HPJ920MF81	
20	25	50	50	3	—	100	84HPK92BMF81		84HPK92WMF81		84HPK92EMF81		84HPK920MF81	
30	40	75	75	—	3½	125	84IPL92BMF81		84IPL92WMF81		84IPL92EMF81		84IPL920MF81	
40	50	100	100	4	—	150	84JPM92BMF81		84JPM92WMF81		84JPM92EMF81		84JPM920MF81	

Note: Hp's shown above are based on the overload amp range for the FLA's (per the National Electric Code) of typical industrial motors. All starter sizes carry one maximum Hp rating.

① NEMA 12 is field convertible to NEMA 3/3R. For conduit hubs and conversion instructions, see page 17-112.

② Not available on standard alternator style ('92' in the catalog number).

③ For NO/NC SPDT contact on overload, replace "81" with "91". "81" will give a NC contact.

Features

- Fully Gasketed NEMA 3R Rainproof Enclosures
- 100,000 Amp Interrupting Capacity with Class R Fuses
- Heavy Duty NEMA Starters
- Solid State or Ambient Compensated Bimetal Overload Relays
- Heavy Duty Disconnect Handle
- Available in Reduced Voltage Versions
- Bold Pilot Legend on Front
- Generous Accessory Space
- Copper Grounding Lug For Three #6 Wires
- UL Listed for Outdoor Use and Service Equipment File #E185287

Application

Heavy duty pump control panels are designed to withstand the most demanding environments. Typical applications include irrigation, agriculture, petrochemical, wastewater treatment and wherever motor control is challenged by harsh elements.

Rugged pump control panels utilized cold forming "tox" process. They are more rainproof, sleet and ice resistant than in the past.

Installation is easy. Panels are factory wired to provide flexible control and protect against short circuits and overloads. Ample space is provided for field modifications and installation of accessories.

The pump control panels feature a full sized removable auxiliary panel for the mounting of accessories. The fusible version features fuse clips for full sized RK5 or compact class J fuses and accessory mounting space for the most commonly used accessories.

Class 87 pump panels become jockey pump panels with the addition of a pressure switch. The jockey pump's primary function is to maintain water pressure at a preset level and thus compensate for possible shortage of water in the pumping system. When the water pressure drops below the preset level, the pressure switch energizes the starter which in turn activates the jockey pump. The water pressure is then brought back up to the desired level. This insures the maintenance of proper water pressure at all times.

Features

Specified by Fortune 500 companies, Siemens NEMA starters offer prolonged service under severe duty conditions. NEMA rated, these starters utilize large silver cadmium oxide contacts and wide copper heat sinks to ensure rapid heat dissipation and maximum electrical life.

ESP200 solid state overload relay
Refer to the section on Class 48 overload relays for features and benefits. Pump panels are factory set at trip Class 10.

The ambient compensated bimetal overload relays are designed to parallel thermal characteristics of typical pump motors. They prevent nuisance trips that may result from operation of the control in a higher ambient temperature than that at the pump. These relays are trip-free, tamperproof and can be set to reset automatically or manually.

HOA and Start Pushbutton

Every pump panel comes with an HOA and a start pushbutton.

Half Size Starters

Siemens motor matched starters feature all the rugged performance characteristics of our NEMA rated starter sizes, but are fractionally sized to more closely match your exact motor rating. As a result, significant economic savings are made possible without sacrificing the reliability you expect from a heavy duty starter.

These additional starter sizes have the reserve capacity to handle occasional plugging and jogging without de-rating the device.

Siemens motor matched can save hundreds, even thousands of dollars per project.

Siemens motor matched starters comply with NEMA, UL and CSA standards.

Panels are predrilled for easy repositioning of the fuse trailer block to accommodate 250 and 600 volt fuses and full sized RK or compact J fuses. Circuit breakers are also available.

Heavy Duty Fusible Disconnect Switch

The disconnect switch has the following advantages:

- Visible blades for the highest level of safety
- Double Break Switching Action to reduce arcing, increase lifetime and eliminate the "electric hinge"
- Oversized lugs are standard
- Line side shield to help guard personnel from contact with live parts

Motor Circuit Protector

The motor circuit protector provides fast, accurate fault clearing that will minimize damage to the motor and control apparatus and protect branch circuit conductors. Continuous current ratings and adjustable trip ranges meet NEC requirements for full load and locked rotor currents. The adjustable instantaneous trip point can be set precisely to assure fault protection and eliminate nuisance tripping.

Removable Door

Enclosure door may be lifted off to make wiring easier.

Mounting Flanges

Convenient flanges at top and bottom of the enclosure provide easy mounting. They fit pole or flat surfaces using keyhole slots.

Quarter Turn Latches

Quarter turns are utilized to secure the door.

Wind Catches

A wind catch is provided to prevent the door from slamming shut (or open) due to high wind conditions.

Safety Disconnect Handle

Up to three padlocks can be used to lock the disconnect in the OFF position. Maintenance work can be performed without hazard to personnel.

External Reset

The overload relay may be quickly reset by means of a button on the front of the enclosure.

Bold Pilot Legend

Provides positive indication of the selector switch position for use to stop the pump motor.

Ground Lugs

Insures proper connecting of ground wires and lightning arresters.

UL Listed

Assures proper construction throughout control panel.

Reduced Voltage

Available in part winding, wye delta and auto transformer types, these controls may be necessary where the power company limits the amount of current drawn from its lines, or where starting torque must be reduced.

Fully gasketed NEMA 3/12 weather-proof enclosures are supplied with Class 88 reduced voltage starters.

Part Winding Starters apply starting current in timed steps to minimize voltage fluctuations.

Auto Transformer Starters maintain a closed circuit during transition and eliminate voltage or current surges. They draw less current than part winding starters and are well suited for starting motors over 20 Hp.

Wye Delta starters and motors are used in areas where the power supply is inadequate to supply full starting current without objectionable voltage drop or for applications where low starting torque is required. Centrifugal pumps and similar apparatus requiring a low starting torque are typical applications. Both ends of all three windings of the wye delta motor are brought out so that they may be accessible for reconnecting from wye to delta.

Auxiliary Equipment

Pilot Lights are easily installed on the enclosure. Oil Tight and Heavy Duty, they meet NEMA A600 requirements.

Lightning Arresters protect the control panel from lightning induced surges.

Undervoltage and Phase Sensing Relays protect the pump against low voltage, voltage imbalance, loss of phase and phase reversal.

Anti-Backspin Timers prevent the motor from starting during motor/shaft backspin.

The TOX Box

Siemens uses the TOX process to manufacture the enclosures for the pump panels.

Advantages of the TOX process:

- Joints are 50-70% stronger
- Since the TOX process compresses the metal at the joint, it does not leave the high stresses in the metal
- Increased corrosion resistance. The protective layer on the metal is not damaged in the process, but instead flows with the material

Class 87 NEMA Vacuum Starter Pump Control Panels

The Siemens vacuum starter pump controllers are designed for the harshest environments. Typical environments include chemical, petrochemical, waste water treatment and mining. Contaminations present in these severe environments are detrimental to conventional air-break contacts decreasing their life expectancy and reliability. The Siemens vacuum starter pump controllers are well suited for these environments because the contacts are contained in hermetically sealed contact tubes. This prevents contaminates in the atmosphere from affecting the operation of the contacts. Additionally, neither arcs nor arcing gases are produced which dramatically increases the electrical endurance of the contacts.

Standard Pump Panel with Solid State Overload, Class 87

Selection

Ordering Information

- Field Modification Kits see page 17-106.
- Factory Modifications see page 17-121.
- Dimensions see page 17-171.
- Wiring Diagrams see page 17-189.
- Replacement Parts see page 17-133.
- Sizes 1-4 will be supplied standard with a 240/480 volt coil. To change the coil voltage, change the 8th character in the catalog number to the letter shown in the coil table.
- Sizes 5 & 6 will be supplied standard with a 480 volt coil. To change the coil voltage, change the 8th character in the catalog number to the letter shown in the coil table.

Coil Table

60Hz Voltage	Letter
24	J
120	F
110–120/220–240	A①
200–208	D
220–240	G
220–240/440–480	C①
277	L
440–480	H
550–600	E

Fusible Disconnect

Max Hp 200 Volts	230 Volts	460 Volts	575 Volts	NEMA Size	Half Size	Overload Amp Range	Frame Size	Disc. Amp Range	Fuse Clip Amp / Volts	Catalog Number	List Price $
—	—	1	1	1	—	0.75–3.4②	A	30	30A/600V	**87DUB6FC**	
—	—	5	5	1	—	3–12	A1	30	30A/600V	**87DUC6FC**	
—	—	10	10	1	—	5.5–22	A1	30	30A/600V	**87DUD6FC**	
—	—	10	10	1	—	5.5–22	A1	60	60A/600V	**87DUD60C**	
—	—	15	15	—	1¾	10–40	A1	30	30A/600V	**87EUE6FC**	
—	—	15	15	—	1¾	10–40	A1	60	60A/600V	**87EUE60C**	
—	—	25	25	2	—	13–52	B	60	60A/600V	**87FUF6FC**	
—	—	25	25	2	—	13–52	B	100	100A/600V	**87FUF60C**	
—	—	30	30	—	2½	25–100	B	60	60A/600V	**87GUG6FC**	
—	—	30	30	—	2½	25–100	B	100	100A/600V	**87GUG60C**	
—	—	50	50	3	—	25–100	B	100	100A/600V	**87HUG6FC**	
—	—	50	50	3	—	25–100	B	200	200A/600V	**87HUG60C**	
—	—	75	75	—	3½	50–200	B	200	200A/600V	**87IUH6FC**	
—	—	100	100	4	—	50–200	B	200	200A/600V	**87JUH6FC**	
—	—	200	200	5	—	55–250	—	400	400A/600V	**87LPU6FH**	
—	—	250	—	6	—	160–630	—	600	600A/600V	**87MSW6FH**	
2	2	—	—	1	—	3–12	A1	30	30A/250V	**87DUC6LC**	
3	3	—	—	1	—	5.5–22	A1	30	30A/250V	**87DUD6LC**	
7½	7½	—	—	1	—	10–40	A1	30	30A/250V	**87DUE6LC**	
7½	7½	—	—	1	—	10–40	A1	60	60A/250V	**87DUE6PC**	
10	10	—	—	—	1¾	10–40	A1	60	60A/250V	**87EUE6LC**	
10	15	—	—	2	—	13–52	B	60	60A/250V	**87FUF6LC**	
10	15	—	—	2	—	13–52	B	100	100A/250V	**87FUF6PC**	
15	20	—	—	—	2½	25–100	B	60	60A/250V	**87GUG6LC**	
15	20	—	—	—	2½	25–100	B	100	100A/250V	**87GUG6PC**	
20	30	—	—	3	—	25–100	B	100	100A/250V	**87HUG6LC**	
25	30	—	—	3	—	25–100	B	200	200A/250V	**87HUG6PC**	
30	40	—	—	—	3½	50–200	B	200	200A/250V	**87IUH6LC**	
40	50	—	—	4	—	50–200	B	200	200A/250V	**87JUH6LC**	
75	100	—	—	5	—	55–250	—	400	400A/250V	**87LPU6LG**	

Circuit Breaker

Max Hp 200 Volts	230 Volts	460 Volts	575 Volts	NEMA Size	Half Size	Overload Amp Range	Frame Size	Motor Circuit Interrupter ETI Amps	Catalog Number	List Price $
½	½	1	1	1	—	0.75–3.4②	A	3	**87DUB6MC**	
2	2	5	5	1	—	3–12	A1	10	**87DUC6MC**	
3	3	10	10	1	—	5.5–22	A1	25	**87DUD6MC**	
7½	7½	10	—	1	—	10–40	A1	30	**87DUE6MC**	
—	—	15	15	—	1¾	10–40	A1	40	**87EUE6MC**	
10	15	25	25	2	—	13–52	B	50	**87FUF6MC**	
15	20	30	30	—	2½	25–100	B	100	**87GUG6MC**	
25	30	50	50	3	—	25–100	B	100	**87HUG6MC**	
30	40	75	75	—	3½	50–200	B	125	**87IUH6MC**	
40	50	100	100	4	—	50–200	B	150	**87JUH6MC**	
50	75	150	200	5	—	55–250	—	250	**87LPT6MH**	
75	100	200	200	5	—	55–250	—	400	**87LPU6MH**	
100	125	250	300	6	—	160–630	—	400	**87MSW6MH**	
150	200	400	400	6	—	160–630	—	600	**87MSX6MH**	

Note: All starter sizes carry one maximum Hp rating (per the National Electric Code).

① Not available on Size 5 and larger.
② For an overload amp range of 0.25-1A, change the 5th character from a 'B' to an 'A'.
③ A version with coil code A is also stocked via Controls Express.

Ordering Information

- Heater elements for bimetal overloads see page 17-126 (3-Required).
- Field Modification Kits see page 17-106.
- Factory Modifications see page 17-121.
- Dimensions see page 17-171.
- Wiring Diagrams see page 17-189.
- Replacement Parts see page 17-133.
- Sizes 1-4 will be supplied standard with a 230/480 volt coil. To change the coil voltage, change the 8th character in the catalog number to the letter shown in the coil table.
- Sizes 5 & 6 will be supplied standard with a 480 volt coil. To change the coil voltage, change the 8th character in the catalog number to the letter shown in the coil table.

Coil Table

60Hz Voltage	Letter
24	J
120	F
110–120/220–240	A①
200–208	D
220–240	G
220–240/440–480	C①
277	L
440–480	H
550–600	E

Fusible Disconnect

Max HP 200V	230V	460V	575V	NEMA Size	Half Size	Disc Amp Rating	Fuse Clip Amps/Volts	Catalog Number	List Price $
—	—	10	10	1	—	30	30A/600V	**87DAE6FC**	
—	—	10	10	1	—	60	60A/600V	**87DAE60C**	
—	—	15	15	—	1¾	30	30A/600V	**87EAF6FC**	
—	—	15	15	—	1¾	60	60A/600V	**87EAF60C**	
—	—	25	25	2	—	60	60A/600V	**87FAJ6FC**	
—	—	25	25	2	—	100	100A/600V	**87FAJ60C**	
—	—	30	30	—	2½	60	60A/600V	**87GAK6FC**	
—	—	30	30	—	2½	100	100A/600V	**87GAK60C**	
—	—	50	50	3	—	100	100A/600V	**87HAN6FC**	
—	—	50	50	3	—	200	200A/600V	**87HAN60C**	
—	—	75	75	—	3½	200	200A/600V	**87IAP6FC**	
—	—	100	100	4	—	200	200A/600V	**87JAR6FC**	
7½	7½	—	—	1	—	30	30A/250V	**87DAE6LC**	
7½	7½	—	—	1	—	60	60A/250V	**87DAE6PC**	
10	10	—	—	—	1¾	60	60A/250V	**87EAG6LC**	
10	15	—	—	2	—	60	60A/250V	**87FAJ6LC**	
10	15	—	—	2	—	100	100A/250V	**87FAJ6PC**	
15	20	—	—	—	2½	100	100A/250V	**87GAL6LC**	
25	30	—	—	3	—	100	100A/250V	**87HAN6LC**	
25	30	—	—	3	—	200	200A/250V	**87HAN6PC**	
30	40	—	—	—	3½	200	200A/250V	**87IAP6LC**	
40	50	—	—	4	—	200	200A/250V	**87JAR6LC**	

Circuit Breaker

Max HP 200V	230V	460V	575V	NEMA Size	Half Size	Motor Circuit Interrupter ETI Amps	Catalog Number	List Price $
½	½	1	1	1	—	3	**87DAA6MC**	
1	1	3	3	1	—	10	**87DAB6MC**	
3	3	7½	7½	1	—	25	**87DAD6MC**	
7½	7½	10	10	1	—	30	**87DAE6MC**	
7½	7½	15	15	—	1¾	40	**87EAF6MC**	
10	10	—	—	—	1¾	50	**87EAG6MC**	
—	—	15	20	2	—	40	**87FAH6MC**	
10	15	25	25	2	—	50	**87FAJ6MC**	
—	—	30	30	—	2½	50	**87GAK6MC**	
15	20	—	—	—	2½	100	**87GAL6MC**	
25	30	50	50	3	—	100	**87HAN6MC**	
30	40	75	75	—	3½	125	**87IAP6MC**	
40	50	100	100	4	—	150	**87JAR6MC**	

Note: Hp's shown above are based on the overload amp range for the FLA's (per the National Electric Code) of typical industrial motors. All starter sizes carry one maximum Hp rating.

① Not available on Size 5 or above.

Ordering Information

- Field Modification Kits see page 17-106.
- Factory Modifications see page 17-121.
- Dimensions see page 17-171.
- Wiring Diagrams see page 17-189.
- Replacement Parts see page 17-133.
- Replace the (*) in the catalog number with a letter from the coil table.
- Refer to page 17-49 for information on the 958L OLR

Coil Table

60Hz Voltage	Letter
24	J
120	F
200–208	D
220–240	G
277	L
440–480	H
550–600	E

Vacuum Break Pump Control Panels (Vacuum Contactor with Trip Class 10 Solid-State Overload Relay)

Max Hp				Fusible Disconnect			Circuit Breaker		
480 Volts	575 Volts	NEMA Size	Overload Relay Range	Fuse Clip Amps/Volts	Catalog Number	List Price $	MCI Amps	Catalog Number	List Price $
100	100	4	55-250A	200A/600V	**87JCM4F***		250A	**87JCM4M***	
200	200	5	55-250A	400A/600V	**87LCU4F***		400A	**87LCT4M***	
250	300	6	160-630A	—	—		400A	**87MCW4M***	
400	400	6	160-630A	—	—		600A	**87MCX4M***	

Oil Well Pump Control Panels (Open Air Contactor with 958L Solid-State Overload Relay)

Max Hp				Fusible Disconnect			Circuit Breaker		
480 Volts	575 Volts	NEMA Size	Overload Relay Range	Fuse Clip Amps/Volts	Catalog Number	List Price $	MCI Amps	Catalog Number	List Price $
25	25	2	13-52	60A/600V	**87FPI6F***		50	**87FPI6M***	
50	50	3	25-100	100A/600V	**87HPK6F***		100	**87HPK6M***	
100	100	4	50-200	200A/600V	87JPM6F*		150	**87JPM6M***	

Note: Hp's shown above are based on the overload amp range for the FLA's (per the National Electric Code) of typical industrial motors. All starter sizes carry one maximum Hp rating.

Ordering Information

- Field Modification Kits see page 17-106.
- Factory Modifications see page 17-121.
- Dimensions see page 17-171.
- Wiring Diagrams see pages 17-182 and 17-183.
- Replacement Parts see page 17-133.

Coil and Control Voltage

The coil voltage on the contactors will be the motor voltage. A CPT will be supplied to provide the control voltage. The control voltage will be 120V.
To change the control voltage to customer supplied (no CPT included), change the 9th character to the following:
for 24V , use "J"
for 120V, use "F"

Auto Transformer Type

		Overload				Fusible Disconnect			Circuit Breaker		
Motor Voltage	Max Hp	Amp Range	Frame Size	NEMA Size	Half Size	Fuse Clip Size Amps/Volts	Catalog Number	List Price $	Circuit Breaker Amps	Catalog Number	List Price $
230	15	13–52	B	2	—	60A/250V	**88FUFT2FG**		50	**88FUFT2MG**	
	20	25–100	B	—	2½	100A/250V	**88GUGT2FG**		100	**88GUGT2MG**	
	30	25–100	B	3	—	100A/250V	**88HUGT2FG**		100	**88HUGT2MG**	
	40	50–200	B	—	3½	200A/250V	**88IUHT2FG**		125	**88IUHT2MG**	
	50	50–200	B	4	—	200A/250V	**88JUHT2FG**		150	**88JUHT2MG**	
	75	55–250	—	5	—	—	**—**		250	**88LPST2MG**	
	100	55–250	—	5	—	400A/250V	**88LPUT2FG**		400	**88LPUT2MG**	
	200	160–630	—	6	—	—	**—**		600	**88MSXT2MG**	
460	25	13–52	B	2	—	60A/600V	**88FUFT4FH**		50	**88FUFT4MH**	
	30	25–100	B	—	2½	60A/600V	**88GUGT4FH**		50	**88GUGT4MH**	
	50	25–100	B	3	—	100A/600V	**88HUGT4FH**		100	**88HUGT4MH**	
	75	50–200	B	—	3½	200A/600V	**88IUHT4FH**		125	**88IUHT4MH**	
	100	50–200	B	4	—	200A/600V	**88JUHT4FH**		150	**88JUHT4MH**	
	150	55–250	—	5	—	—	**—**		250	**88LPST4MH**	
	200	55–250	—	5	—	400A/600V	**88LPST4FH**		400	**88LPUT4MH**	
	250	160–630	—	6	—	—	**—**		400	**88MSVT4MH**	
	400	160–630	—	6	—	600A/600V	**88MSXT4FH**		600	**88MSXT4MH**	

Part Winding 2 Step

		Overload				Fusible Disconnect			Circuit Breaker		
Motor Voltage	Max Hp	Amp Range	Frame Size	NEMA Size	Half Size	Fuse Clip Size Amps/Volts	Catalog Number	List Price $	Circuit Breaker Amps	Catalog Number	List Price $
230	20	10–40	A1	—	1¾	100A/250V	**88EUEP2FG**		100	**88EUEP2MG**	
	25	13–52	B	2	—	100A/250V	**88FUFP2FG**		100	**88FUFP2MG**	
	40	25–100	B	—	2½	200A/250V	**88GUGP2FG**		100	**88GUGP2MG**	
	50	25–100	B	3	—	200A/250V	**88HUGP2FG**		150	**88HUGP2MG**	
	60	50–200	B	—	3½	200A/250V	**88IUHP2FG**		250	**88IUHP2MG**	
	75	50–200	B	4	—	400A/250V	**88JUHP2FG**		250	**88JUHP2MG**	
	125	55–250	—	5	—	—	**—**		400	**88LPSP2MG**	
	150	55–250	—	5	—	600A/250V	**88LPUP2FG**		600	**88LPUP2MG**	
460	30	10–40	A1	—	1¾	100A/600V	**88EUEP4FH**		100	**88EUEP4MH**	
	40	13–52	B	2	—	100A/600V	**88FUFP4FH**		100	**88FUFP4MH**	
	60	25–100	B	—	2½	200A/600V	**88GUGP4FH**		100	**88GUGP4MH**	
	75	25–100	B	3	—	200A/600V	**88HUGP4FH**		150	**88HUGP4MH**	
	100	50–200	B	—	3½	200A/600V	**88IUHP4FH**		250	**88IUHP4MH**	
	150	50–200	B	4	—	400A/600V	**88JUHP4FH**		250	**88JUHP4MH**	
	250	55–250	—	5	—	—	**—**		400	**88LPSP4MH**	
	350	55–250	—	5	—	600A/600V	**88LPUP4FH**		600	**88LPUP4MH**	

Note: All starter sizes carry one maximum Hp rating (per the National Electric Code).

Ordering Information

- Field Modification Kits see page 17-106.
- Factory Modifications see page 17-121.
- Dimensions see page 17-171.
- Wiring Diagrams see pages 17-184 and 17-185.
- Replacement Parts see page 17-133.

Coil and Control Voltage

The coil voltage on the contactors will be the motor voltage. A CPT will be supplied to provide the control voltage. The control voltage will be 120V.
To change the control voltage to customer supplied (no CPT included), change the 9th character to the following:
for 24V , use "J"
for 120V, use "F"

Wye Delta

Motor Voltage	Max Hp	Overload Amp Range	Overload Frame Size	NEMA Size	Half Size	Fuse Clip Size Amps/Volts	Motor Circuit Interruter ETI Amps	Open Transition Fusible Disconnect Catalog Number	Open Transition Fusible Disconnect List Price $	Open Transition Circuit Breaker Catalog Number	Open Transition Circuit Breaker List Price $	Closed Transition Fusible Disconnect Catalog Number	Closed Transition Fusible Disconnect List Price $	Closed Transition Circuit Breaker Catalog Number	Closed Transition Circuit Breaker List Price $
200	10	10–40	A1	1	—	60A/250V	50	**88DUE06FD**		**88DUE06MD**		**88DUEC6FD**		**88DUEC6MD**	
	15	10–40	A1	—	1¾	100A/250V	100	**88EUE06FD**		**88EUE06MD**		**88EUEC6FD**		**88EUEC6MD**	
	20	13–52	B	2	—	100A/250V	100	**88FUF06FD**		**88FUF06MD**		**88FUFC6FD**		**88FUFC6MD**	
	30	25–100	B	—	2½	200A/250V	125	**88GUG06FD**		**88GUG06MD**		**88GUGC6FD**		**88GUGC6MD**	
	40	25–100	B	3	—	200A/250V	150	**88HUG06FD**		**88HUG06MD**		**88HUGC6FD**		**88HUGC6MD**	
	50	50–200	B	—	3½	200A/250V	250	**88IUH06FD**		**88IUH06MD**		**88IUHC6FD**		**88IUHC6MD**	
	60	50–200	B	4	—	400A/250V	250	**88JUH06FD**		**88JUH06MD**		**88JUHC6FD**		**88JUHC6MD**	
	75	55–250	—	5	—	400A/250V	400	**88LPS06FD**		**88LPS06MD**		**88LPSC6FD**		**88LPSC6MD**	
	150	55–250	—	5	—	600A/250V	600	**88LPU06FD**		**88LPU06MD**		**88LPUC6FD**		**88LPUC6MD**	
	300	160–630	—	6	—	—	800	—		**88MSX06MD**		—		**88MSXC6MD**	
230	10	10–40	A1	1	—	60A/250V	50	**88DUE02FG**		**88DUE02MG**		**88DUEC2FG**		**88DUEC2MG**	
	15	10–40	A1	—	1¾	60A/250V	50	**88EUE02FG**		**88EUE02MG**		**88EUEC2FG**		**88EUEC2MG**	
	25	13–52	B	2	—	100A/250V	100	**88FUF02FG**		**88FUF02MG**		**88FUFC2FG**		**88FUFC2MG**	
	30	25–100	B	—	2½	200A/250V	100	**88GUG02FG**		**88GUG02MG**		**88GUGC2FG**		**88GUGC2MG**	
	50	25–100	B	3	—	200A/250V	150	**88HUG02FG**		**88HUG02MG**		**88HUGC2FG**		**88HUGC2MG**	
	60	50–200	B	—	3½	200A/250V	250	**88IUH02FG**		**88IUH02MG**		**88IUHC2FG**		**88IUHC2MG**	
	75	50–200	B	4	—	400A/250V	250	**88JUH02FG**		**88JUH02MG**		**88JUHC2FG**		**88JUHC2MG**	
	100	55–250	—	5	—	400A/250V	400	**88LPS02FG**		**88LPS02MG**		**88LPSC2FG**		**88LPSC2MG**	
	150	55–250	—	5	—	600A/250V	600	**88LPU02FG**		**88LPU02MG**		**88LPUC2FG**		**88LPUC2MG**	
	350	160–630	—	6	—	—	1200	—		**88MSX02MG**		—		**88MSXC2MG**	
460	15	5.5-22	A1	1	—	30A/600V	30	**88DUD04FH**		**88DUD04MH**		**88DUDC4FH**		**88DUDC4MH**	
	30	10–40	A1	—	1¾	60A/600V	50	**88EUE04FH**		**88EUE04MH**		**88EUEC4FH**		**88EUEC4MH**	
	40	13–52	B	2	—	100A/600V	100	**88FUF04FH**		**88FUF04MH**		**88FUFC4FH**		**88FUFC4MH**	
	60	25–100	B	—	2½	200A/600V	100	**88GUG04FH**		**88GUG04MH**		**88GUGC4FH**		**88GUGC4MH**	
	75	25–100	B	3	—	200A/600V	125	**88HUG04FH**		**88HUG04MH**		**88HUGC4FH**		**88HUGC4MH**	
	100	50–200	B	—	3½	200A/600V	150	**88IUH04FH**		**88IUH04MH**		**88IUHC4FH**		**88IUHC4MH**	
	150	50–200	B	4	—	400A/600V	250	**88JUH04FH**		**88JUH04MH**		**88JUHC4FH**		**88JUHC4MH**	
	200	55–250	—	5	—	400A/600V	400	**88LPS04FH**		**88LPS04MH**		**88LPSC4FH**		**88LPSC4MH**	
	300	55–250	—	5	—	600A/600V	600	**88LPU04FH**		**88LPU04MH**		**88LPUC4FH**		**88LPUC4MH**	
	700	160–630	—	6	—	—	1200	—		**88MSX04MH**		—		**88MSXC4MH**	
575	15	5.5-22	A1	1	—	30A/600V	30	**88DUD05FE**		**88DUD05ME**		**88DUDC5FE**		**88DUDC5ME**	
	30	10–40	A1	—	1¾	60A/600V	50	**88EUE05FE**		**88EUE05ME**		**88EUEC5FE**		**88EUEC5ME**	
	40	13–52	B	2	—	100A/600V	50	**88FUF05FE**		**88FUF05ME**		**88FUFC5FE**		**88FUFC5ME**	
	60	25–100	B	—	2½	200A/600V	100	**88GUG05FE**		**88GUG05ME**		**88GUGC5FE**		**88GUGC5ME**	
	75	25–100	B	3	—	200A/600V	125	**88HUG05FE**		**88HUG05ME**		**88HUGC5FE**		**88HUGC5ME**	
	100	50–200	B	—	3½	200A/600V	150	**88IUH05FE**		**88IUH05ME**		**88IUHC5FE**		**88IUHC5ME**	
	150	50–200	B	4	—	400A/600V	250	**88JUH05FE**		**88JUH05ME**		**88JUHC5FE**		**88JUHC5ME**	
	200	55–250	—	5	—	400A/600V	400	**88LPS05FE**		**88LPU05ME**		**88LPSC5FE**		**88LPSC5ME**	
	300	55–250	—	5	—	600A/600V	400	**88LPU05FE**		**88LPU05ME**		**88LPUC5FE**		**88LPUC5ME**	
	700	160–630	—	6	—	—	1200	—		**88MSX05ME**		—		**88MSXC5ME**	

Note: All starter sizes carry one maximum Hp rating (per the National Electric Code).

Simplicity and compact lightweight design makes Class LE lighting contactors an attractive solution to your budgeting challenges.

- Used in applications where it is not critical that contacts remain closed if control power is lost
- Rated for tungsten lighting (incandescent filament), ballast lighting (fluorescent, HID, metal halide, mercury vapor, quartz halogen and sodium-lamp), resistive and general use loads
- Contacts are rated 20 - 400 amps at 600 volts
- 3 and 4 pole (up to 12 pole for 30 and 60 amp contactors)
- Most contactors have built-in auxiliary contacts for convenient 3-wire control
- Wide range of coil voltages from 24 to 600 VAC 50/60Hz
- Compact design allows for smaller panels and more wiring room
- Finger and back-of-hand safe terminals
- Panel and DIN rail mounting
- Full line of enclosures including NEMA 1, 3/3R, 4, 4/4X stainless steel and 12
- Available in combination form with choice of non-fusible disconnect, fusible disconnect or circuit breaker
- Full line of factory and field modifications

Catalog Numbering System

LE [ ] [ ] [ ] [ ] 0 [ ] [ ] [ ]

Disconnect Type
B = Combination Circuit Breaker
D = Combination Non-Fused Disconnect
F = Combination Fusible Disconnect
N = Non-Combination

Disconnect Rating
0 = N/A
A = 30A/250V Disconnect
B = 30A/600V Disconnect
C = 60A/250V Disconnect
D = 60A/600V Disconnect
E = 100A/250V Disconnect
F = 100A/600V Disconnect
G = 200A/250V Disconnect
H = 200A/600V Disconnect
J = 400A/250V Disconnect
K = 400A/600V Disconnect
T = 20A Circuit Breaker
V = 30A Circuit Breaker
Y = 60A Circuit Breaker
Z = 100A Circuit Breaker

Enclosure Type
0 = Open
1 = NEMA 1
2 = NEMA 12/3R
4 = NEMA 4/4X SS

Contactor Rating (Amp)
B = 20
C = 30
D = 60
E = 100
F = 200
G = 300
H = 400

N.C. Poles
0 = None

N.O. Poles
03 = Three
04 = Four
06 = Six
09 = Nine
12 = Twelve

Coil Voltage (AC 60Hz)
024 = 24
120 = 120
208 = 208
240 = 240
277 = 277
347 = 347
480 = 480
600 = 600

Series
A = 200 – 400A Contactors
B = 20 – 100A Contactors

Ordering Information

- Replace *** with a number from the coil table.
- Field Modification Kits see page 17-106.
- Factory Modifications see page 17-121.
- Dimensions see page 17-151 for open, page 17-172 for enclosed.
- Wiring Diagram see page 17-190.
- Replacement Parts see page 17-136.

Coil Table

VAC 60Hz	***
24	024
120	120
208	208
240	240
277	277
347 [1]	347
480	480
600	600

Replace the (***) with a number from the coil table.

Non-Combination Contactor

Max. Amp Rating	Number of Poles	Normally Closed Contacts	Normally Open Contacts	Enclosure Type			
				Open	1	3/3R/12 [2]	4/4X 304 S.S.
				Catalog Number			
20	3	0	3	LEN00B003***B	LEN01B003***B	LEN02B003***B	LEN04B003***B
	4	0	4	LEN00B004***B	LEN01B004***B	LEN02B004***B	LEN04B004***B
30	3	0	3	LEN00C003***B	LEN01C003***B	LEN02C003***B	LEN04C003***B
	4	0	4	LEN00C004***B	LEN01C004***B	LEN02C004***B	LEN04C004***B
	6	0	6	LEN00C006***B	LEN01C006***B	LEN02C006***B	LEN04C006***B
	9	0	9	LEN00C009***B	LEN01C009***B	LEN02C009***B	LEN04C009***B
	12	0	12	LEN00C012***B	LEN01C012***B	LEN02C012***B	LEN04C012***B
60	3	0	3	LEN00D003***B	LEN01D003***B	LEN02D003***B	LEN04D003***B
	6	0	6	LEN00D006***B	LEN01D006***B	LEN02D006***B	LEN04D006***B
	9	0	9	LEN00D009***B	LEN01D009***B	LEN02D009***B	LEN04D009***B
	12	0	12	LEN00D012***B	LEN01D012***B	LEN02D012***B	LEN04D012***B
100	3	0	3	LEN00E003***B	LEN01E003***B	LEN02E003***B	LEN04E003***B
200	3	0	3	LEN00F003***A	LEN01F003***A	LEN02F003***A	LEN04F003***A
300	3	0	3	LEN00G003***A	LEN01G003***A	LEN02G003***A	LEN04G003***A
400	3	0	3	LEN00H003***A	LEN01H003***A	LEN02H003***A	LEN04H003***A

[1] Not available on 200 - 400A contactors.
[2] Type 12 field convertible to type 3/3R.

Contactor	LEN00B003	LEN00B004	LEN00C003	LEN00C004
General technical data:				
Finger-safe (main circuit / control circuit)	yes / yes	yes / yes	yes / yes	yes / yes
Degree of pollution	3	3	3	3
Altitude (m)	2,000	2,000	2,000	2,000
Ambient storage temperature (°C)	-55 to 80	-55 to 80	-55 to 80	-55 to 80
Ambient operating temperature (°C)	0 to 40	0 to 40	0 to 40	0 to 40
Humidity (% non-condensing)	10 to 95	10 to 95	10 to 95	10 to 95
Shock resistance at rectangular impulse (g/ms)	6.7 / 5, 4.2 / 10	6.7 / 5, 4.2 / 10	7.5 / 5, 4.7 / 10	7.5 / 5, 4.7 / 10
Shock resistance at sine pulse (g/ms)	10.5 / 5, 6.6 / 10	10.5 / 5, 6.6 / 10	11.8 / 5, 7.4 / 10	11.8 / 5, 7.4 / 10
Rated impulse voltage resistance (kV)	no data	no data	no data	no data
Rated insulation voltage (V)	no data	no data	no data	no data
Mechanical operating cycles as operating time:				
of contactor	30,000,000	30,000,000	10,000,000	10,000,000
of contactor with additional aux contacts	10,000,000	10,000,000	10,000,000	10,000,000
Main circuit:				
Number of NC / NO main contacts	0NC / 3NO	0NC / 4NO	0NC / 3NO	0NC / 4NO
Typical power loss per conductor (W)	0.7	0.7	0.9	0.9
Off-load operating frequency (cycles per hour)	10,000	10,000	5,000	5,000
Current ratings:				
Tungsten (poles per phase)	**20A @277V 1p 1ph 20A @480V 2p 1ph 20A @480V 3p 3ph**	**20A @277V 1p 1ph 20A @480V 2p 1ph 20A @480V 3p 3ph**	**30A @277V 1p 1ph 30A @480V 2p 1ph 30A @480V 3p 3ph**	**30A @277V 1p 1ph 30A @480V 2p 1ph 30A @480V 3p 3ph**
Ballast (poles per phase)	**20A @347V 1p 1ph 20A @600V 2p 1ph 20A @600V 3p 3ph**	**20A @347V 1p 1ph 20A @600V 2p 1ph 20A @600V 3p 3ph**	**30A @347V 1p 1ph 30A @600V 2p 1ph 30A @660V 3p 3ph**	**30A @347V 1p 1ph 30A @600V 2p 1ph 30A @600V 3p 3ph**
General and resistive (poles per phase)	**20A @600V 1p 1ph 20A @600V 2p 1ph 20A @600V 3p 3ph**	**20A @600V 1p 1ph 20A @600V 2p 1ph 20A @600V 3p 3ph**	**30A @600V 1p 1ph 30A @600V 2p 1ph 30A @600V 3p 3ph**	**30A @600V 1p 1ph 30A @600V 2p 1ph 30A @600V 3p 3ph**
Coil ratings:				
Nominal voltage	2)	2)	2)	2)
Inrush / sealed power (VA)	31.7 / 4.8	31.7 / 4.8	87 / 9.4	87 / 9.4
Coil voltage tolerance factor	0.8 - 1.1	0.8 - 1.1	0.8 - 1.1	0.8 - 1.1
Internal/standard auxiliary contact:				
Number of NC / NO auxiliary contacts	0NC / 1NO	NA①	1NC / 1NO	1NC / 1NO
Rating	A600 / Q600	NA	A600 / Q600	A600 / Q600
Installation/mounting/dimensions:				
Mounting orientation	vertical	vertical	vertical	vertical
Type of mounting: screw / DIN rail	yes / yes	yes / yes	yes / yes	yes / yes
Height x Width x Depth (mm)	57.5 x 45 x 73	57.5 x 45 x 73	85 x 45 x 97	85 x 60 x 97
Minimum clearance to sides (mm)	0	0	0	0
Minimum clearance to earthed parts (mm)	6	6	6	6
Connection type / torque for main circuit terminals	screw / 7-10 lb in	screw / 7-10 lb in	screw / 18-22 lb in	screw / 18-22 lb in
Connection type / torque for control circuit terminals	screw / 7-10 lb in	screw / 7-10 lb in	screw / 7-10 lb in	screw / 7-10 lb in
Solid and stranded conductors for main contacts (AWG)	2x(20-16), 2x(18-14), 2x(12)	2x(20-16), 2x(18-14), 2x(12)	2x(6-12), 2x(14-8)	2x(6-12), 2x(14-8)
Solid and stranded conductors for control circuit (AWG)	2x(20-16), 2x(18-14)	2x(20-16), 2x(18-14)	2x(20-16), 2x(18-14)	2x(20-16), 2x(18-14)
Conductor type for main and control circuits	75°C CU	75°C CU	75°C CU	75°C CU
Short circuit current rating of main circuit:				
Short circuit current rating	5kA @ 600V	5kA @ 600V	5kA @ 600V	5kA @ 600V
Max fuse / circuit breaker (Amp)	30 / 25	30 / 25	60 / 40	60 / 40
Certificates:	**cULus**	**cULus**	**cULus**	**cULus**

① Must use an external (optional) auxiliary contact.
2) Refer to catalog selection tables for coil voltages.

LEN00D003	LEN00E003	LEN00F003	LEN00G003	LEN00H003
no / yes	no / yes	no / yes	no / yes	no / yes
3	3	3	3	3
2,000	2,000	2,000	2,000	2,000
-55 to 80	-55 to 80	-55 to 80	-55 to 80	-55 to 80
0 to 40	0 to 40	0 to 40	0 to 40	0 to 40
10 to 95	10 to 95	10 to 95	10 to 95	10 to 95
10 / 5, 5 / 10	6.8 / 5, 4 / 10	8.5 / 5, 4.2 / 10	8.5 / 5, 4.2 / 10	8.5 / 5, 4.2 / 10
15 / 5, 8 / 10	10.6 / 5, 6.2 / 10	13.4 / 5, 6.5 / 10	13.4 / 5, 6.5 / 10	13.4 / 5, 6.5 / 10
no data	no data	no data	no data	no data
no data	no data	no data	no data	no data
Mechanical operating cycles as operating time:				
10,000,000	10,000,000	10,000,000	10,000,000	10,000,000
10,000,000	10,000,000	10,000,000	10,000,000	10,000,000
Main circuit:				
0NC / 3NO	0NC / 3NO	0NC / 3NO	0NC / 3NO	0NC / 3NO
2.6	7.7	13	18	35
5,000	5,000	2,000	2,000	2,000
Current ratings:				
60A @277V 1p 1ph 60A @480V 2p 1ph 60A @480V 3p 3ph	**100A @277V 1p 1ph 100A @480V 2p 1ph 100A @480V 3p 3ph**	**200A @277V 1p 1ph 200A @480V 2p 1ph 200A @480V 3p 3ph**	**300A @277V 1p 1ph 300A @480V 2p 1ph 300A @480V 3p 3ph**	**400A @277V 1p 1ph 400A @480V 2p 1ph 400A @480V 3p 3ph**
60A @600V 1p 1ph 60A @600V 2p 1ph 60A @600V 3p 3ph	**100A @600V 1p 1ph 100A @600V 2p 1ph 100A @600V 3p 3ph**	**200A @600V 1p 1ph 200A @600V 2p 1ph 200A @600V 3p 3ph**	**300A @600V 1p 1ph 300A @600V 2p 1ph 300A @600V 3p 3ph**	**400A @600V 1p 1ph 400A @600V 2p 1ph 400A @600V 3p 3ph**
60A @600V 1p 1ph 60A @600V 2p 1ph 60A @600V 3p 3ph	**100A @600V 1p 1ph 100A @600V 2p 1ph 100A @600V 3p 3ph**	**200A @600V 1p 1ph 200A @600V 2p 1ph 200A @600V 3p 3ph**	**300A @600V 1p 1ph 300A @600V 2p 1ph 300A @600V 3p 3ph**	**400A@600V 1p 1ph 400A @600V 2p 1ph 400A @600V 3p 3ph**
Coil ratings:				
2)	2)	2)	2)	2)
166 / 12.6	300 / 21	300 / 5.8	590 / 6.7	830 / 9.2
0.8 - 1.1	0.8 - 1.1	0.8 - 1.1	0.8 - 1.1	0.8 - 1.1
Internal/standard auxiliary contact:				
NA①	NA ①	2NC / 2NO	2NC / 2NO	2NC / 2NO
NA	NA	A300 / Q300	A300 / Q300	A300 / Q300
Installation/mounting/dimensions:				
vertical	vertical	vertical	vertical	vertical
yes / yes	yes / yes	yes / no	yes / no	yes / no
112 x 55 x 115	146 x 70 x 139	172 x 120 x 180	210 x 145 x 202	214 x 160 x 225
6	6	10	10	10
6	6	10	10	10
screw / 27-40 lb in	screw / 36-53 lb in	screw / 90-110 lb in	screw / 180-195 lb in	screw / 180-195 lb in
screw / 7-10 lb in	screw / 7-10 lb in	screw / 7-10 lb in	screw / 7-10 lb in	screw / 7-10 lb in
2x(18-3), 1x(18-2)	2x(10-1/0), 1x(10-2/0)	2x(6-3/0)	2x(2/0-500MCM)	2x(2/0-500MCM)
2x(18-14)	2x(18-14)	2x(18-14)	2x(18-14)	2x(18-14)
75°C CU	75°C CU	75°C CU	75°C CU	75°C CU
Short circuit current rating of main circuit:				
5kA @ 600V	10kA @ 600V	10kA @ 600V	18kA @ 600V	18kA @ 600V
100 / 80	200 / 125	400 / 250	600 / 400	800 / 500
cULus	**cULus**	**cULus**	**cULus**	**cULus**

Ordering Information

- Replace *** with a number from the coil table.
- Field Modification Kits see page 17-106.
- Factory Modifications see page 17-121.
- Dimensions see page 17-172.
- Wiring Diagram see page 17-190.
- Replacement Parts see page 17-136.

Coil Table

VAC 60Hz	***
24	024
120	120
208	208
240	240
277	277
347①	347
480	480
600	600

Replace the (***) with a number from the coil table.

Combination Contactor

Disconnect Type	Max. Amp Rating	Number of NO Poles	Disc. Amp Rating	Disc Amp/ Fuse Clip Rating	Circuit Breaker Rating	Enclosure Type 1 Catalog Number	3/3R/12②, 4③ Catalog Number	4/4X 304 S.S. Catalog Number
Non-Fusible	20	3	30A	—	—	**LEDB1B003***B**	**LEDB2B003***B**	**LEDB4B003***B**
	30	3	30A	—	—	**LEDB1C003***B**	**LEDB2C003***B**	**LEDB4C003***B**
	60	3	60A	—	—	**LEDD1D003***B**	**LEDD2D003***B**	**LEDD4D003***B**
	100	3	100A	—	—	**LEDF1E003***B**	**LEDF2E003***B**	**LEDF4E003***B**
	200	3	200A	—	—	**LEDH1F003***A**	**LEDH2F003***A**	**LEDH4F003***A**
	300	3	400A	—	—	**LEDK1G003***A**	**LEDK2G003***A**	**LEDK4G003***A**
Fusible	20	3	—	30A/250V	—	**LEFA1B003***B**	**LEFA2B003***B**	**LEFA4B003***B**
		3	—	30A/600V	—	**LEFB1B003***B**	**LEFB2B003***B**	**LEFB4B003***B**
	30	3	—	30A/250V	—	**LEFA1C003***B**	**LEFA2C003***B**	**LEFA4C003***B**
		3	—	30A/600V	—	**LEFB1C003***B**	**LEFB2C003***B**	**LEFB4C003***B**
	60	3	—	60A/250V	—	**LEFC1D003***B**	**LEFC2D003***B**	**LEFC4D003***B**
		3	—	60A/600V	—	**LEFD1D003***B**	**LEFD2D003***B**	**LEFD4D003***B**
	100	3	—	100A/250V	—	**LEFE1E003***B**	**LEFE2E003***B**	**LEFE4E003***B**
		3	—	100A/600V	—	**LEFF1E003***B**	**LEFF2E003***B**	**LEFF4E003***B**
	200	3	—	200A/250V	—	**LEFG1F003***A**	**LEFG2F003***A**	**LEFG4F003***A**
		3	—	200A/600V	—	**LEFH1F003***A**	**LEFH2F003***A**	**LEFH4F003***A**
	300	3	—	400A/250V	—	**LEFJ1G003***A**	**LEFJ2G003***A**	**LEFJ4G003***A**
		3	—	400A/600V	—	**LEFK1G003***A**	**LEFK2G003***A**	**LEFK4G003***A**
Circuit Breaker	20	3	—	—	20A	**LEBT1B003***B**	**LEBT2B003***B**	**LEBT4B003***B**
	30	3	—	—	30A	**LEBV1C003***B**	**LEBV2C003***B**	**LEBV4C003***B**
	60	3	—	—	60A	**LEBY1D003***B**	**LEBY2D003***B**	**LEBY4D003***B**
	100	3	—	—	100A	**LEBZ1E003***B**	**LEBZ2E003***B**	**LEBZ4E003***B**

① Not available on 200 - 400A contactors.
② Type 12 field convertible to type 3/3R.
③ Type 4 painted enclosure through 100 Amp only.

Class LC lighting contactors deliver unprecedented versatility in application, simplicity in configuration and performance in operation. Ingenious design, rugged construction and a host of truly useful features make them uniquely appealing to all those who use them.

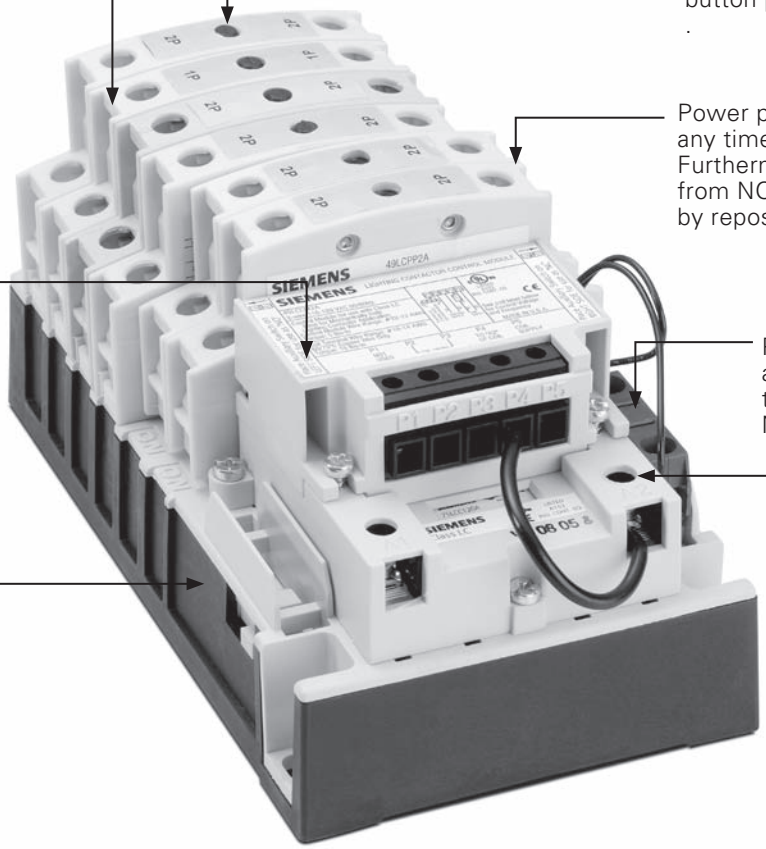

- Used in all applications where either electrically or mechanically held contactors are specifically suited and also ideal for maximum flexibility and future expansion
- Rated for tungsten lighting (incandescent filament), ballast lighting (fluorescent, HID, metal halide, mercury vapor, quartz halogen and sodium-lamp), resistive and general use loads
- Contacts are rated up to 30 amps at 600 volts
- Up to 12 poles (maximum of 8 normally closed)
- Wide range of coil voltages from 24 to 600 VAC 50/60Hz
- Can be ordered as either electrically or mechanically held and can also be converted from electrically to mechanically held in the field with a simple conversion kit
- Modular design enables you to stock the building block components to assemble all configurations of both the electrically and mechanically held contactors thus dramatically reducing inventory
- Full line of enclosures including NEMA 1, 3/3R, 4, 4/4X stainless steel and 12
- Full line of factory and field modifications

Catalog Numbering System

LC	E0		C				A

Controller Type
E0 = Electrically Held
(Convertible to MH)

Enclosure Type
0 = Open
1 = NEMA 1
2 = NEMA 12/3R
4 = NEMA 4/4X Stainless Steel

Contactor Rating (Amp)
C = 30

N.C. Poles
0 = None
1 = One
2 = Two
3 = Three
4 = Four
5 = Five
6 = Six
7 = Seven
8 = Eight

N.O. Poles
00 = None
01 = One
02 = Two
03 = Three
04 = Four
05 = Five
06 = Six
07 = Seven
08 = Eight
09 = Nine
10 = Ten
11 = Eleven
12 = Twelve

Coil Voltage
024 = 24V 60Hz / 20V 50Hz
120 = 115-120V 60Hz / 110V 50Hz
208 = 200-208V 60Hz
240 = 230-240V 60Hz / 220V 50Hz
277 = 277V 60Hz / 240V 50Hz
347 = 347V 60Hz
480 = 460-480V 60Hz / 440V 50Hz
600 = 575-600V 60Hz / 550V 50Hz

Ordering Information

- To order standard electrically held contactor, simply select catalog number from tables below.
- To order mechanically held contactor, select catalog number from tables below and specify conversion module from factory modification section from page 17-124.
- To convert standard electrically held contactor to mechanically held in the field, select catalog number from tables below and select conversion module kit from field modification section on page 17-108.
- Replace *** with a number from the coil table.
- Field Modification Kits see page 17-106.
- Factory Modifications see page 17-121.
- Dimensions see page 17-150 open, page 17-172 enclosed.
- Wiring Diagrams see page 17-190.
- Replacement Parts see page 17-136.

Coil Table

VAC 60Hz	***
24	024
120	120
208	208
240	240
277	277
347	347
480	480
600	600

Replace the (***) with a number from the coil table.

Non-Combination Contactor (30 Amp max.)

No. of Poles		Enclosure Type			
		Open	1	3/3R/12①	4/4X 304 S.S.
N.C.	N.O.	Catalog Number			
2	0	LCE00C200***A	LCE01C200***A	LCE02C200***A	LCE04C200***A
3		LCE00C300***A	LCE01C300***A	LCE02C300***A	LCE04C300***A
4		LCE00C400***A	LCE01C400***A	LCE02C400***A	LCE04C400***A
5		LCE00C500***A	LCE01C500***A	LCE02C500***A	LCE04C500***A
6		LCE00C600***A	LCE01C600***A	LCE02C600***A	LCE04C600***A
7		LCE00C700***A	LCE01C700***A	LCE02C700***A	LCE04C700***A
8		LCE00C800***A	LCE01C800***A	LCE02C800***A	LCE04C800***A
1	1	LCE00C101***A	LCE01C101***A	LCE02C101***A	LCE04C101***A
2		LCE00C201***A	LCE01C201***A	LCE02C201***A	LCE04C201***A
3		LCE00C301***A	LCE01C301***A	LCE02C301***A	LCE04C301***A
4		LCE00C401***A	LCE01C401***A	LCE02C401***A	LCE04C401***A
5		LCE00C501***A	LCE01C501***A	LCE02C501***A	LCE04C501***A
6		LCE00C601***A	LCE01C601***A	LCE02C601***A	LCE04C601***A
7		LCE00C701***A	LCE01C701***A	LCE02C701***A	LCE04C701***A
8		LCE00C801***A	LCE01C801***A	LCE02C801***A	LCE04C801***A
0	2	LCE00C002***A	LCE01C002***A	LCE02C002***A	LCE04C002***A
1		LCE00C102***A	LCE01C102***A	LCE02C102***A	LCE04C102***A
2		LCE00C202***A	LCE01C202***A	LCE02C202***A	LCE04C202***A
3		LCE00C302***A	LCE01C302***A	LCE02C302***A	LCE04C302***A
4		LCE00C402***A	LCE01C402***A	LCE02C402***A	LCE04C402***A
5		LCE00C502***A	LCE01C502***A	LCE02C502***A	LCE04C502***A
6		LCE00C602***A	LCE01C602***A	LCE02C602***A	LCE04C602***A
7		LCE00C702***A	LCE01C702***A	LCE02C702***A	LCE04C702***A
8		LCE00C802***A	LCE01C802***A	LCE02C802***A	LCE04C802***A
0	3	LCE00C003***A	LCE01C003***A	LCE02C003***A	LCE04C003***A
1		LCE00C103***A	LCE01C103***A	LCE02C103***A	LCE04C103***A
2		LCE00C203***A	LCE01C203***A	LCE02C203***A	LCE04C203***A
3		LCE00C303***A	LCE01C303***A	LCE02C303***A	LCE04C303***A
4		LCE00C403***A	LCE01C403***A	LCE02C403***A	LCE04C403***A
5		LCE00C503***A	LCE01C503***A	LCE02C503***A	LCE04C503***A
6		LCE00C603***A	LCE01C603***A	LCE02C603***A	LCE04C603***A
7		LCE00C703***A	LCE01C703***A	LCE02C703***A	LCE04C703***A
8		LCE00C803***A	LCE01C803***A	LCE02C803***A	LCE04C803***A

① Type 12 field convertible to Type 3/3R.

Non-Combination Contactor (30 Amp max.)

No. of Poles		Enclosure Type			
		Open	1	3/3R/12 ①	4/4X 304 S.S.
N.C.	N.O.	Catalog Number			
0	4	LCE00C004***A	LCE01C004***A	LCE02C004***A	LCE04C004***A
1		LCE00C104***A	LCE01C104***A	LCE02C104***A	LCE04C104***A
2		LCE00C204***A	LCE01C204***A	LCE02C204***A	LCE04C204***A
3		LCE00C304***A	LCE01C304***A	LCE02C304***A	LCE04C304***A
4		LCE00C404***A	LCE01C404***A	LCE02C404***A	LCE04C404***A
5		LCE00C504***A	LCE01C504***A	LCE02C504***A	LCE04C504***A
6		LCE00C604***A	LCE01C604***A	LCE02C604***A	LCE04C604***A
7		LCE00C704***A	LCE01C704***A	LCE02C704***A	LCE04C704***A
8		LCE00C804***A	LCE01C804***A	LCE02C804***A	LCE04C804***A
0	5	LCE00C005***A	LCE01C005***A	LCE02C005***A	LCE04C005***A
1		LCE00C105***A	LCE01C105***A	LCE02C105***A	LCE04C105***A
2		LCE00C205***A	LCE01C205***A	LCE02C205***A	LCE04C205***A
3		LCE00C305***A	LCE01C305***A	LCE02C305***A	LCE04C305***A
4		LCE00C405***A	LCE01C405***A	LCE02C405***A	LCE04C405***A
5		LCE00C505***A	LCE01C505***A	LCE02C505***A	LCE04C505***A
6		LCE00C605***A	LCE01C605***A	LCE02C605***A	LCE04C605***A
0	6	LCE00C006***A	LCE01C006***A	LCE02C006***A	LCE04C006***A
1		LCE00C106***A	LCE01C106***A	LCE02C106***A	LCE04C106***A
2		LCE00C206***A	LCE01C206***A	LCE02C206***A	LCE04C206***A
3		LCE00C306***A	LCE01C306***A	LCE02C306***A	LCE04C306***A
4		LCE00C406***A	LCE01C406***A	LCE02C406***A	LCE04C406***A
5		LCE00C506***A	LCE01C506***A	LCE02C506***A	LCE04C506***A
6		LCE00C606***A	LCE01C606***A	LCE02C606***A	LCE04C606***A
0	7	LCE00C007***A	LCE01C007***A	LCE02C007***A	LCE04C007***A
1		LCE00C107***A	LCE01C107***A	LCE02C107***A	LCE04C107***A
2		LCE00C207***A	LCE01C207***A	LCE02C207***A	LCE04C207***A
3		LCE00C307***A	LCE01C307***A	LCE02C307***A	LCE04C307***A
4		LCE00C407***A	LCE01C407***A	LCE02C407***A	LCE04C407***A
0	8	LCE00C008***A	LCE01C008***A	LCE02C008***A	LCE04C008***A
1		LCE00C108***A	LCE01C108***A	LCE02C108***A	LCE04C108***A
2		LCE00C208***A	LCE01C208***A	LCE02C208***A	LCE04C208***A
3		LCE00C308***A	LCE01C308***A	LCE02C308***A	LCE04C308***A
4		LCE00C408***A	LCE01C408***A	LCE02C408***A	LCE04C408***A
0	9	LCE00C009***A	LCE01C009***A	LCE02C009***A	LCE04C009***A
1		LCE00C109***A	LCE01C109***A	LCE02C109***A	LCE04C109***A
2		LCE00C209***A	LCE01C209***A	LCE02C209***A	LCE04C209***A
0	10	LCE00C010***A	LCE01C010***A	LCE02C010***A	LCE04C010***A
1		LCE00C110***A	LCE01C110***A	LCE02C110***A	LCE04C110***A
2		LCE00C210***A	LCE01C210***A	LCE02C210***A	LCE04C210***A
0	11	LCE00C011***A	LCE01C011***A	LCE02C011***A	LCE04C011***A
0	12	LCE00C012***A	LCE01C012***A	LCE02C012***A	LCE04C012***A

① Type 12 field convertible to Type 3/3R.

General technical data:	
Finger-safe (main circuit / control circuit)	yes / yes
Degree of pollution	3
Altitude (m)	2,000
Ambient storage temperature (°C)	-30 to 65
Ambient operating temperature (°C)	-25 to 40
Humidity (% non-condensing)	no data
Shock resistance at rectangular impulse (g/ms)	no data
Shock resistance at sine pulse (g/ms)	no data
Rated impulse voltage resistance (kV)	no data
Rated insulation voltage (V)	600
Mechanical operating cycles as operating time:	
of contactor	100,000
of contactor with additional aux contacts	100,000
Main circuit:	
Number of main contacts	2 - 12 (maximum of 8 NC)
Typical power loss per conductor (W)	no data
Off-load operating frequency (cycles per hour)	60 for continued operation
Current ratings:	
Tungsten (poles per phase)	20A @277V 1p 1ph 20A @480V 2p 1ph 20A @480V 3p 3ph
Ballast (poles per phase)	30A @347V 1p 1ph 30A @600V 2p 1ph 30A @600V 3p 3ph
General and resistive (poles per phase)	30A @600V 1p 1ph 30A @600V 2p 1ph 30A @600V 3p 3ph
Coil ratings:	
Nominal voltage	(refer to coil voltage table)
Inrush / sealed power (VA)	248 / 28
Coil voltage tolerance factor	0.85 - 1.1
External/optional auxiliary contact:	
Number of NC / NO auxiliary contacts	2NC / 2NO max
Rating	A600, 24VDC, 24VAC
Installation/mounting/dimensions:	
Mounting orientation	vertical
Type of mounting: screw / DIN rail	yes / no
Height x Width x Depth (mm)	188 x 106 x 98
Minimum clearance to sides (mm)	12.7
Minimum clearance to earthed parts (mm)	12.7
Connection type / torque:	
Main contact terminals	screw / 35 lb in
Coil terminals	screw / 15 lb in
Auxiliary contact terminals	screw / 7-12 lb in
Control module terminals	screw / 5 lb in
Solid and stranded conductors (AWG):	
Main contact terminals	1x(14-8), #8 solid or stranded 2x(14-8), #8 stranded only
Coil terminals	2x(18-14)
Auxiliary contact terminals	2x(22-12)
Control module terminals	1x(22-12)
Conductor type for main / control circuits	75°C CU / 60-75°C CU
Short circuit current rating of main circuit:	
Short circuit current rating	(see SCCR tables)
Certificates:	**cUL**

Coil voltages:
24V 60Hz / 20V 50Hz
115-120V 60Hz / 110V 50Hz
200-208V 60Hz
230-240V 60Hz / 220V 50Hz
277V 60Hz / 240V 50Hz
347V 60Hz
460-480V 60Hz / 440V 50Hz
575-600V 60Hz / 550V 50Hz

Short circuit current ratings with fuses:

Max. Volt.	Fuse	Max. Device Rating (Amps)	SCCR (kA)
600	RK fuse	60	5

Short circuit current ratings with circuit breakers:

Max. Volt.	Siemens Listed Circuit Breaker	Max. Device Rating (Amps)	SCCR (kA)
600	NGG3B040L	40	5
480	HEG3B040L	40	5
480	ED63B040L	40	5
480	NGG3B040L	40	5

Conversion module:

Input Volt. (AC)	Steady State Current @ Rated Volts (mA)	Max. VA
24	*80*	*5*
115-120	*83*	*12*
200-277	*91*	*30*

Conversion module:	
Min. pulse duration (3-wire module)	250ms
Max. allowable leakage current	1.8 mA
EMI	35 V/m
Surge transient peak	6 kV
Frequency range	40-70 Hz

CLM 20 Amp

CLM 100 Amp

Mechanically Latched Lighting and Heating Contactor

The CLM Lighting Contactors can be used with metal halide, mercury vapor, quartz halogen, tungsten and fluorescent lighting. They provide reliable and convenient lighting control in numerous applications, such as industrial plants, schools, hospitals, office buildings, shopping centers, airports, stadiums . . . literally everywhere lighting is required.

The CLMs are listed under UL 508 with no derating when used open or enclosed. Combination lighting contactors are listed for UL service entrance.
UL listed File #E60310
CSA Certified File LR 6535

Type CLM 20 Amp Lighting Contactor Solid State Control Modules

The CLM 20 amp lighting contactor is an electromagnetically operated, mechanically latched three wire control contactor. The most commonly used method of control is a three position momentary contact switch with a center-off position. The controlling device must be able to make the coil inrush current but need not break it. The coil current is interrupted by the control contacts within the CLM contactor. Power for the control line may come from a separate source or directly from the line side of the CLM contactor. The CLM contactor can also be controlled by devices such as:

- Break-glass control stations
- Timers having single pole, double throw contacts
- Photo-electric cells①
- Energy management systems①
- Microprocessors①
- Occupancy sensors①

Control modules make it possible to use a controlling device that does not have enough current-carrying capacity to control the CLM contactor directly. Control modules are also used when the control station is to be located at a distance greater than the allowable contactor line run.

Another use for control modules occurs when the controlling device is only available as a single pole single-throw contact necessitating a two wire control line.

Still another application for control modules is when start-stop three wire control is needed.

Control modules also can make it possible to operate the CLM coil from its own incoming line at one voltage while providing the control at a second, perhaps lower voltage.

Two Wire Control Module (Accessory 47)

The advantages of two wire controls are:

1. Control station can have lower ampacity rating.
2. Control station can be located an extended distance from the CLM contactor.
3. Control module can frequently be controlled directly from microprocessor.
4. Control devices can be two wire single pole, single-throw types.
5. Control voltage may be different than the CLM coil circuit and at a lower voltage level.

Note: If the control power to the solid state control module is lost while the module is energized the lighting contactor will open. If the line power to the lighting contactor is lost while the contactor is energized the contactor will not change state with return of line voltage. Power will be restored to the load if the control module is still energized. Control station should be the maintained type.

Three Wire Control Module (Accessory 48)

1. The accessory 48 consists of two relays with contacts appropriately interconnected which provides for an interlocking that prevents both relays from being energized simultaneously.

2. This module has similar characteristics to the two wire module (Accessory 47) except there is no change of switch contact position upon loss of control line power. Control stations should be the momentary type.

Stop-Start Control Module (Accessory 49)

Stop-start three wire maintained control is an arrangement used mostly when controlling motors, but can be used in lighting applications.

Any number of momentary contact control stations consisting of normally open start buttons and normally closed stop buttons can be used. Start buttons are connected in parallel and stop buttons in series.

Operation (Magnetic Latch)

A permanent magnet is built into the contactor structure of the 30A, 60A, 100A, and 200A contactors that will maintain the contactor in its energized state indefinitely without using control power. When energized, a DC current is applied that produces a magnetic field that reinforces the polarity of the permanent magnet, and the contactor pulls in immediately. The current to the coil is disconnected by the coil clearing interlock. In order to drop out the contactor, it is necessary to apply a field through the OFF coil in the reverse direction to the permanent magnet. This momentarily cancels the magnetic attraction and the contactor drops out. Coil and module failures are possible when used with solid state relays and PLC outputs. 24-volt systems are ok to use, but 120 volts and above should be discouraged. If higher values cannot be avoided, an interposing relay should be used.

(Mechanically Latched)

The 300 & 400A lighting and heating contactors operate using a latching mechanism.

Closing – When the "close" pushbutton is operated, the closing coil is energized, closing the contactor. As the contactor closes, the latch lever hooks over the latch pin to mechanically latch the contactor closed. The coil-clearing auxiliary contact de-energizes the closing coil.

Opening – When the "Trip" pushbutton is operated, the trip solenoid coil is energized, unhooking the latch lever from the latch pin, which allows the contactor to open. As the contactor opens, the coil-clearing auxiliary contact de-energizes the trip solenoid coil.

① Operation through control modules.

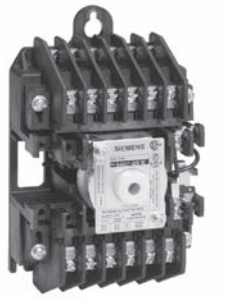

Ordering Information

- Replace *** with a number from the coil table.
- Field modification kits see page 17-106.
- Factory modifications see page 17-121.
- Dimensions see page 17-155 open page 17-172 enclosed.
- Wiring Diagrams see page 17-193.
- Replacement parts see page 17-136.

Coil Table

60Hz Voltage	Number
24②	024
120	120
208	208
240	240
277	277
480	480
600⑤	600

Open and Non-combination Enclosed Contactors

Max Amp Rating	Number of Poles	Open Type④		Enclosure					
				NEMA 1 General Purpose		NEMA 12 NEMA 3/3R③ Industrial Use Weatherproof		NEMA 4/4X Stainless Steel③ Watertight, Dust-tight, Corrosion Resistant, 304 Stainless Steel	
		Catalog Number	List Price $	Catalog Number	List Price $	Catalog Number	List Price $	Catalog Number	List Price $
20	2	see table below		CLM1B02***		CLM2B02***		CLMSB02***	
	3			CLM1B03***		CLM2B03***		CLMSB03***	
	4			CLM1B04***		CLM2B04***		CLMSB04***	
	6			CLM1B06***		CLM2B06***		CLMSB06***	
	8			CLM1B08***		CLM2B08***		CLMSB08***	
	10			CLM1B10***		CLM2B10***		CLMSB10***	
	12			CLM1B12***		CLM2B12***		CLMSB12***	
30	2	CLM0C02***		CLM1C02***		CLM2C02***		CLMSC02***	
	3	CLM0C03***		CLM1C03***		CLM2C03***		CLMSC03***	
	4	CLM0C04***		CLM1C04***		CLM2C04***		CLMSC04***	
	5	CLM0C05***		CLM1C05***		CLM2C05***		CLMSC05***	
	6	CLM0C06***		CLM1C06***		CLM2C06***		—	—
	8	CLM0C08***		CLM1C08***		CLM2C08***		—	—
	9	CLM0C09***		CLM1C09***		CLM2C09***		—	—
	10	CLM0C10***		CLM1C10***		CLM2C10***		—	—
	12	CLM0C12***		CLM1C12***		CLM2C12***		—	—
60	2	CLM0D02***		CLM1D02***		CLM2D02***		CLMSD02***	
	3	CLM0D03***		CLM1D03***		CLM2D03***		CLMSD03***	
	4	CLM0D04***		CLM1D04***		CLM2D04***		CLMSD04***	
	5	CLM0D05***		CLM1D05***		CLM2D05***		CLMSD05***	
	6	CLM0D06***		CLM1D06***		CLM2D06***		—	—
	8	CLM0D08***		CLM1D08***		CLM2D08***		—	—
	9	CLM0D09***		CLM1D09***		CLM2D09***		—	—
	10	CLM0D10***		CLM1D10***		CLM2D10***		—	—
	12	CLM0D12***		CLM1D12***		CLM2D12***		—	—
100	2	CLM0E02***		CLM1E02***		CLM2E02***		CLMSE02***	
	3	CLM0E03***		CLM1E03***		CLM2E03***		CLMSE03***	
	4	CLM0E04***		CLM1E04***		CLM2E04***		CLMSE04***	
	5	CLM0E05***		CLM1E05***		CLM2E05***		CLMSE05***	
200	2	CLM0F02***		CLM1F02***		CLM2F02***		CLMSF02***	
	3	CLM0F03***		CLM1F03***		CLM2F03***		CLMSF03***	
	4	CLM0F04***		CLM1F04***		CLM2F04***		CLMSF04***	
	5	CLM0F05***		CLM1F05***		CLM2F05***		CLMSF05***	
300	2	CLM0G02***		CLM1G02***		CLM2G02***		—	—
	3	CLM0G03***		CLM1G03***		CLM2G03***		—	—
400	2	CLM0H02***		CLM1H02***		CLM2H02***		—	—
	3	CLM0H03***		CLM1H03***		CLM2H03***		—	—

Open 20 Amp Contactors

Max Amp Rating	Number of Poles①	110–120V Coil 50/60Hz		208–240V Coil 50/60Hz		265–277V Coil 50/60Hz	
		Catalog Number	List Price $	Catalog Number	List Price $	Catalog Number	List Price $
20	2	CLM22031		CLM22061		CLM22071	
	3	CLM32031		CLM32061		CLM32071	
	4	CLM42031		CLM42061		CLM42071	
	6	CLM62031		CLM62061		CLM62071	
	8	CLM82031		CLM82061		CLM82071	
	10	CLM102031		CLM102061		CLM102071	
	12	CLM122031		CLM122061		CLM122071	

① Contactors with 2–6-poles will be assembled with all poles located in the top portion of the contactor. Contactors with 8–12-poles will be assembled with 6-poles in the top portion and the remaining poles in the bottom portion of the contactor.

② 24 volt coils are not available on 20, 300 and 400 amp contactor sizes. For 24 volt control of 20 amp contactor select solid state control module.

③ For conduit hubs and conversion instructions, see page 17-112.

④ CLM 30 & 60A 6-12-pole can be field assembled. Order mounting kit **49MCMPMA** and the appropriate number of 2-5 pole contactors.

⑤ 24, 480 or 600 volt coils are not available on 20 amp contactors.

Combination Mechanically and Magnetically Held Lighting Contactors, Class CM

Selection

Ordering Information

- Replace *** with a number from the coil table.
- Field modification kits see page 17-106.
- Factory modifications see page 17-121.
- Dimensions see page 17-172.
- Wiring Diagrams see page 17-193.
- Replacement parts see page 17-136.

Coil Table

60Hz Voltage	Number
24①	024
120	120
208	208
240	240
277	277
480	480
600③	600

Combination Lighting Contactors

Disconnect Type	Contactor Amp Rating	Number of NO Poles	Disc Amp Rating	Disc Amp/ Fuse Clip Rating	Circuit Breaker Rating	Enclosure: NEMA 1 General Purpose		NEMA 12, NEMA 3/3R② NEMA 4 Painted (thru 100 amps) Industrial Use Weatherproof, Watertight, Dust-tight		NEMA 4/4X Stainless Steel Watertight, Dust-tight, Corrosion Resistant, 304 Stainless Steel	
						Catalog Number	List Price $	Catalog Number	List Price $	Catalog Number	List Price $
Non-Fusible	20	3	30A	—	—	CMNB14***		CMNB24***		CMNBS4***	
	30	3	30A	—	—	CMNC14***		CMNC24***		CMNCS4***	
	60	3	60A	—	—	CMND15***		CMND25***		CMNDS5***	
	100	3	100A	—	—	CMNE16***		CMNE26***		CMNES6***	
	200	3	200A	—	—	CMNF17***		CMNF27***		CMNFS7***	
	300	3	400A	—	—	CMNG18***		CMNG28***		CMNGS8***	
Fusible	20	3	—	30A/250V	—	CMFB10***		CMFB20***		CMFBS0***	
		3	—	30A/600V	—	CMFB11***		CMFB21***		CMFBS1***	
	30	3	—	30A/250V	—	CMFC10***		CMFC20***		CMFCS0***	
		3	—	30A/600V	—	CMFC11***		CMFC21***		CMFCS1***	
	60	3	—	60A/250V	—	CMFD12***		CMFD22***		CMFDS2***	
		3	—	60A/600V	—	CMFD13***		CMFD23***		CMFDS3***	
	100	3	—	100A/250V	—	CMFE14***		CMFE24***		CMFES4***	
		3	—	100A/600V	—	CMFE15***		CMFE25***		CMFES5***	
	200	3	—	200A/250V	—	CMFF16***		CMFF26***		CMFFS6***	
		3	—	200A/600V	—	CMFF17***		CMFF27***		CMFFS7***	
	300	3	—	400A/250V	—	CMFG18***		CMFG28***		CMFGS8***	
		3	—	400A/600V	—	CMFG19***		CMFG29***		CMFGS9***	
Circuit Breaker	20	3	—	—	20A	CMBB14***		CMBB24***		CMBBS4***	
	30	3	—	—	30A	CMBC15***		CMBC25***		CMBCS5***	
	60	3	—	—	60A	CMBD18***		CMBD28***		CMBDS8***	
	100	3	—	—	100A	CMBE18***		CMBE28***		CMBES8***	
	200	3	—	—	200A	CMBF10***		CMBF20***		CMBFS0***	
	300	3	—	—	300A	CMBG11***		CMBG21***		CMBGS1***	

Lighting & Heating Contactor Ratings CLM

Maximum AC/DC Voltage and Amp Ratings

Load Type	Amperes Continuous	Poles to Load: 1 for 1-Phase	2 for 1-Phase 3 for 3-Phase
Tungsten	20	250V AC	250V AC
Ballast	20	347V AC	600V AC
General	30	347V AC	600V AC
General	20	125V DC	250V DC

Inrush Current Over Fuse Size (amps RMS) at AC Control Voltage 20A CLM					
Amps	120V	240V	277V	347V	480V
Inrush	5.0	2.5	2.2	1.8	1.3
Fuse	2.0	1.0	1.0	0.75	0.5

Contactor Ratings			
Load Type	Amperes Continuous	Max Volts Line to Line	Max Volts Line to Neutral
Tungsten	30-400	480	277
Ballast	30-400	600	346
Heating	30-400	600	346

AC Coil Data			
Contactor Amperes	No. Poles	Inrush VA	Dropout VA
20	2-12	625	6
30	2-5	410	40
60	2-3	410	40
60	4-5	600	40
100/200	2-3	900	200
100/200	4-5	1300	130
300/400	2-3	1600	550

① 24 volt coils are not available on 20 and 300 amp contactors. Use solid state control module on 20 amp size.

② For conduit hubs and conversion instructions, see page 17-112.

③ 600 volt coils are not available on 20 amp contactors.

Features

- Enclosed coils (50-5000VA); Completely encloses the transformer coils against moisture, dust, dirt and industrial contaminants for maximum protection in hostile and industrial environments.
- Fuse clips (most models). Factory mounted for integral fusing on the secondary side to save panel space, save wiring time and save the cost of buying an add-on fuse block or kit
- Integrally finger safe terminals. Between terminals and transformer, protect against electrical creepage. Up to 30% greater terminal contact area permits low-loss connections. Extra-deep barriers reduce the chance of shorts from frayed leads or careless wiring
- Terminals. Molded into the transformer, are difficult to break during wiring. A full quarter-inch of thread on the 8-32 terminal screws prevents stripping and pullout
- Jumpers supplied. Two jumper links are standard with all transformers which can be wired for dual primary voltages

Operation

Industrial control circuits and motor control loads typically require more current when they are initially energized than under normal operating conditions. This period of high current demand, referred to as inrush, may be as great as ten times the current required under steady state (normal) operating conditions, and can last up to 40 milliseconds. A transformer in a circuit subject to inrush will typically attempt to provide the load with the required current during the inrush period. However, it will be at the expense of the secondary voltage stability by allowing the voltage to the load to decrease as the current increases. This period of secondary voltage instability, resulting from increased current, can be of such magnitude that the transformer is unable to supply sufficient voltage to energize the load. The transformer must therefore be designed and constructed to accommodate the high inrush current, while maintaining secondary voltage stability. According to NEMA standards, the secondary voltage would typically be at 85% of the rated voltage.

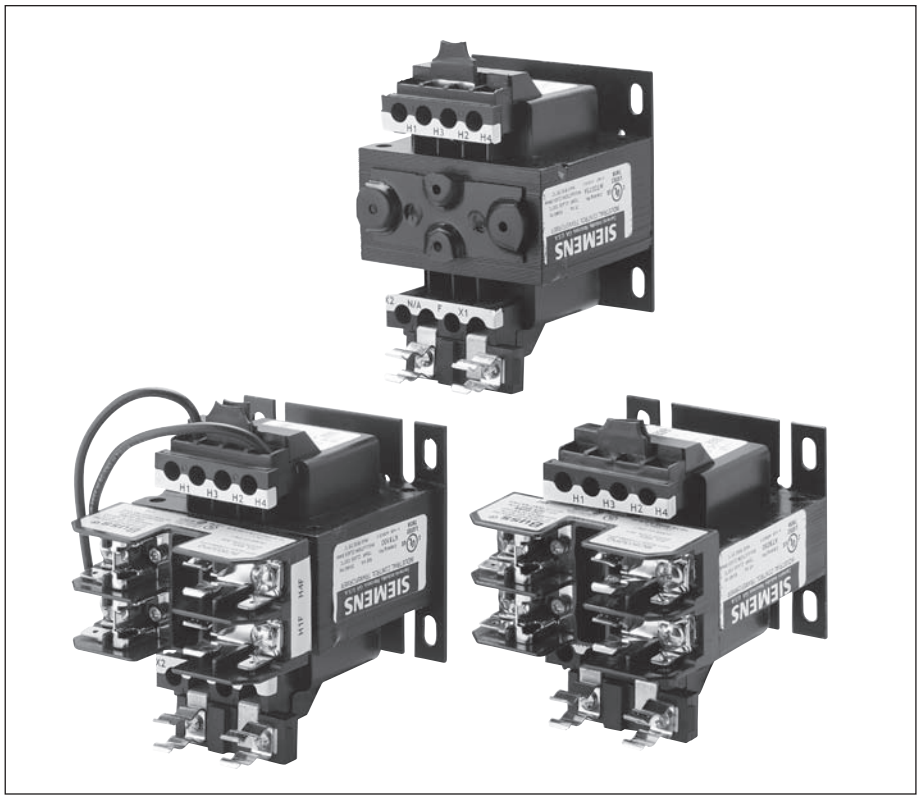

Industrial Control Power Transformers are specifically designed and built to provide adequate voltage to the load while accommodating the high current levels present at inrush. These transformers deliver excellent secondary voltage regulation and meet or exceed the standards established by NEMA, ANSI, UL and cUL. Their rugged construction and excellent electrical characteristics ensure reliable operation of electromagnetic devices and trouble-free performance.

Specifications

- Laminations are built with silicon steel to minimize core losses and to increase optimum performance and efficiency
- Copper magnet wire of the highest quality assures efficient operation
- Factory mounted type "K" fuse clips are standard on all secondary transformers where possible
- Two jumper links are standard with all transformers which can be wired for dual primary voltages
- cUL Listed and CSA certified
- 50/60 Hz rated
- Insulation materials are of the highest rating available for the temperature class
- Mounting plate is heavy gauge steel to add strength to core construction and provide stable mounting. Slotted mounting feet permit easy installation
- Attractive black finish; easy-to-read nameplate with complete rating data and wiring diagram
- Class 130°C (226°F) insulation system. 80°C (176°F) temperature rise. (50-750VA typical)
- Class 180°C (356°F) insulation system. 120°C (248°F) temperature rise. (1000–5000VA typical)
- Optional field mounted 2-pole primary Class CC fuse block is available

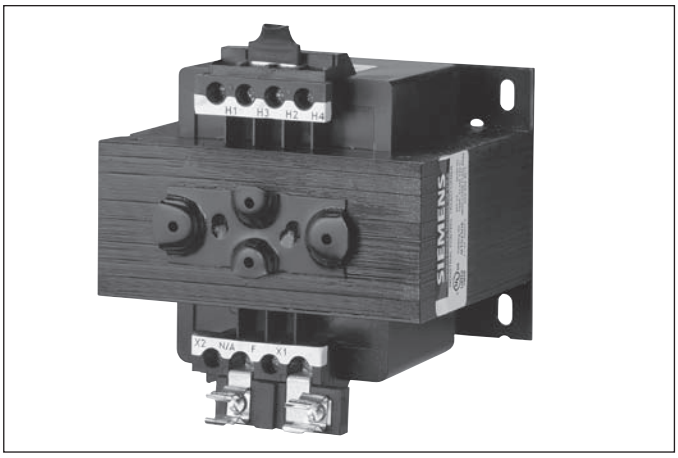

Features

- Class MTG Industrial Control Transformers are 100% certified for all domestic and International Applications
- The MTG line has full compliance with IEC Safety standards EN 61 558
- CE Mark in accordance with requirements for EN 61 558
- Meets IP-20 specifications per IEC 529 for finger-safe protection when used with Siemens Touch Safe snap on terminal cover kits. Meets IP-00 specifications when covers are not used.
- UL Listed
- Exceeds applicable requirements for control transformers as determined by NEMA and ANSI
- Insulation requirements is twice that of UL5085
- Available in 50 to 750 VA sizes, in all standard voltage combinations
- Class 130°C (226°F) insulation system. 80°C (176°F) temperature rise. (50-750VA typical)
- Class 180°C (356°F) insulation system. 120°C (248°F) temperature rise. (1000–5000VA typical)
- Primary and secondary fusing capability available as field installed kits for domestic or international fusing
- Integrally-molded terminals and barriers between terminals make breakage virtually impossible during wiring. The MTG transformer construction is the same as our high quality Class MT transformers

Optional Field Installed Fuse Clip Kits For Panel Mounting

- 2-Pole primary Class CC fuse block
- 1-Pole secondary midget fuse block for 13⁄32 × 1½ fuses
- 2-Pole primary international type fuse blocks
- 1-Pole secondary international type fuse blocks

Optional Touch-Safe Snap-On Terminal Cover Kits

The Touch-Safe terminal covers are designed to comply with IEC 742 and IP 20 requirements. When installed, the covers prevent contact with current carrying parts on the transformer and are available for 4 terminal configurations.

The international fuse block kits have inherent touch safe terminals and fuse clips.

Siemens Meets International Standards

CSA (Canadian Standards Association) was utilized as a Competent Body in reviewing, interpreting and properly complying with the requirements of IEC-742 to place a CE mark on its MTG Series product. As a National Certification Body, CSA also has the proper documentation and reports on file for MTG Series to utilize the CB Scheme ensuring acceptance throughout the world.

The standard Siemens MTG product is available with terminal covers which meets the requirements of IEC-529, IP20 degree of protection and meets the applicable requirements for covers per IEC-742.

IEC-742

The requirements for industrial control circuit transformers to be used in the European Common Market are identified by the International Electrotechnical Commission (IEC) and specified under IEC-742, Non-Short Circuit Proof Isolating Transformers, under the Low Voltage Directive 73/23/EEC. Manufacturers of control transformers indicate compliance with these requirements by placing a CE mark on the product.

- Winding to winding insulation requirements may be twice that for IEC-742 compared to UL506
- The electrical clearances between current carrying parts are one-third greater to comply with IEC-742 requirements for units up to 250VA with voltages up to 440 volts ac
- Transformers manufactured to IEC-742 requirements will have a minimum of 10% higher overload capacity than those manufactured only to UL506 requirements

While no requirement exists in IEC-742 for the electrical connections to be either finger safe or touch proof, the specification does state that IF a transformer is supplied with a cover to prevent incidental contact with current carrying parts, that cover must utilize two separate methods or places of securing it to the component, with neither being dependent upon the other. Additionally, one of these methods MUST require a tool to remove it.

IEC-529

The requirements for finger-safe or touch-proof electrical connections are identified by the International Electrotechnical Commission (IEC) under specification 529, Classification of Degrees of Protection Provided by Enclosures. These various degrees of protection are identified and differentiated by IP ratings.

The IP specification which most closely approximates protection to a human finger is IP20. This IP rating would be the most common degree of touch-proof connection for electrical components such as transformers.

EN 61 558

The requirements for industrial control transformers to be used in the European Common Market are identified by the IEC and specified in EN 61 558, Safety of Power Control Transformers, under Low Voltage Directive 73/23/EEC. CE mark on the product indicates compliance.

Transformer Selection Process

Selecting a transformer for industrial control circuit applications requires knowledge of the following terms:

Inrush VA is the product of load voltage (V) multiplied by the current (A) that is required during circuit start-up. It is calculated by adding the inrush VA requirements of all devices (contactors, timers, relays, pilot lights, solenoids, etc.), which will be energized together. Inrush VA requirements are best obtained from the component manufacturer.

Sealed VA is the product of load voltage (V) multiplied by the current (A) that is required to operate the circuit after initial start-up or under normal operating conditions. It is calculated by adding the sealed VA requirements of all electrical components of the circuit that will be energized at any given time. Sealed VA requirements are best obtained from the component manufacturer. Sealed VA is also referred to as steady state VA.

Primary Voltage is the voltage available from the electrical distribution system and its operational frequency, which is connected to the transformer supply voltage terminals.

Secondary Voltage is the voltage required for load operation which is connected to the transformer load voltage terminals.

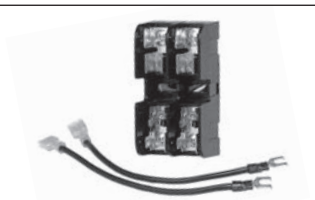

Fuse Clip Kit KCCFPX2R

Primary Fuse Kit

In addition to factory installed secondary fusing, Siemens offers a primary fuse kit for class MT transformers size 50–750 VA for field installation. The primary fuse kit includes a 2-pole Class CC fuse block, instructions and all associated mounting and wiring hardware. Additionally, this fuse kit will fit most competitors' units. To order this kit, use catalog number **KCCFPX2R**. The primary fuse kit, when installed, will add a maximum of 0.69 in. (18 mm) to the transformer "A" dimension and 1.94 in. (49 mm) to the "C" dimension.

Once the circuit variables have been determined, transformer selection is a simple 5-step process as follows:

1. Determine the Application Inrush VA by using the following industry accepted formula:
   Application Inrush VA = $\sqrt{(\text{Inrush VA})^2 + (\text{Sealed VA})^2}$
2. Refer to the Regulation Data Chart. If the primary voltage is basically stable and does not vary by more than 5% from nominal, the 90% secondary voltage column should be used. If the primary voltage varies between 5% and 10% of nominal, the 95% secondary voltage column should be used.
3. After determining the proper secondary voltage column, read down until a value equal to or greater than the Application Inrush VA is found. In no case should a figure less than the Application Inrush VA be used.
4. Read left to the Transformer VA Rating column to determine the proper transformer for this application. As a final check, make sure that the Transformer VA Rating is equal to or greater than the total sealed requirements. If not, select a transformer with a VA rating equal to or greater than the total sealed VA.
5. Refer to the following pages to determine the proper catalog number based on the transformer VA, and primary and secondary voltage requirements.

Regulation Data Chart

Transformer VA Ratings	Inrush VA At 20% Power Factor		
	NEMA/IEC 95% Sec Voltage	NEMA/IEC 90% Sec Voltage	NEMA/IEC 85% Sec Voltage
25	100/——	130/——	150/——
50	170/190	200/220	240/270
75	310/350	410/460	540/600
100	370/410	540/600	730/810
150	780/860	930/1030	1150/1270
200	810/900	1150/1270	1450/1600
250	1400/1540	1900/2090	2300/2530
300	1900/2090	2700/2970	3850/4240
350	3100/3410	3650/4020	4800/5280
500	4000/4400	5300/5830	7000/7700
750	8300/9130	11000/12100	14000/15400
1000①	15000/——	21000/——	27000/——
1000②	9000/——	13000/——	18500/——
1500	10500/——	15000/——	205000/——
2000	17000/——	25500/——	34000/——
3000	24000/——	36000/——	47500/——
5000	55000/——	92500/——	115000/——

To comply with NEMA standards, which require all magnetic devices to operate successfully at 85% of rated voltage, the 90% secondary voltage column is most often used in selecting a transformer.

① For units with Class 105°C insulation systems.
② For units with Class 180°C insulation systems.

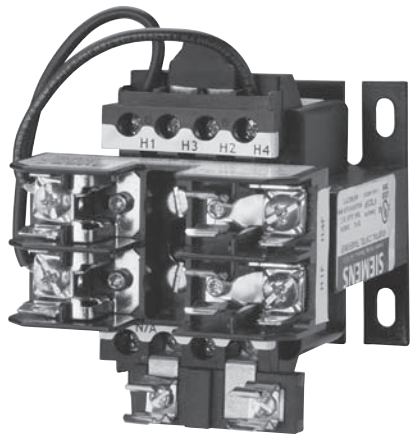

Primary Fuse Kit Installation—Class MT Transformer with Primary Fuse Kit, KCCFPX2R

Ordering Information

- Use the Voltage Table to determine the primary and secondary voltage required.
- Field Modifications see page 17-114.
- Dimensions see page 17-157.
- Wiring Diagrams see page 17-195.
- Touchsafe cover chart see page 17-103.

Voltage Table

Primary Volts 50/60 Hz	Secondary Volts	Letter
240 X 480, 230 X 460, 220 X 440	120/115/110	A
240 X 480	24	B
120 X 240	24	C
115 X 230	24	D
550/575/600	110/115/120	E
208/277	120	F
208/230/460	115	G
230/460/575	95/115	H
380/400/415	110 X 220	I
208/230/460, 200/220/440,240/480	24 X 115, 23 X 110, 25 X 120	J
240/416/480/600, 230/400/460/575, 220/380/440/550, 208/500	99/120/130, 95/115/125, 91/110/120, 85/100/110	L
240 X 480	120 X 240	M

VA Rating	Voltage Letter A		Voltage Letter B		Voltage Letter C		Voltage Letter D		Voltage Letter E		Voltage Letter F	
	Catalog No	List Price $	Catalog No	List Price $	Catalog No	List Price $	Catalog No	List Price $	Catalog No	List Price $	Catalog No	List Price $
50	MT0050A		MT0050B		MT0050C		MT0050D		MT0050E		MT0050F	
75	MT0075A		MT0075B		MT0075C		MT0075D		MT0075E		MT0075F	
100	MT0100A		MT0100B		MT0100C		MT0100D		MT0100E		MT0100F	
150	MT0150A		MT0150B		MT0150C		MT0150D		MT0150E		MT0150F	
200	MT0200A		MT0200B		MT0200C		MT0200D		MT0200E		MT0200F	
250	MT0250A		MT0250B		MT0250C		MT0250D		MT0250E		MT0250F	
300	MT0300A		MT0300B		MT0300C		MT0300D		MT0300E		MT0300F	
350	MT0350A		MT0350B		MT0350C		MT0350D		MT0350E		MT0350F	
500	MT0500A		MT0500B		MT0500C		MT0500D		MT0500E		MT0500F	
750	MT0750A		MT0750B		—	—	—	—	MT0750E		MT0750F	
1000	MT1000A		—	—	—	—	—	—	MT1000E		—	—
1500	MT1500A		—	—	—	—	—	—	—	—	—	—
2000	MT2000A		—	—	—	—	—	—	—	—	—	—
3000	MT3000A		—	—	—	—	—	—	—	—	—	—
5000	MT5000A		—	—	—	—	—	—	—	—	—	—

VA Rating	Voltage Letter G		Voltage Letter H		Voltage Letter I		Voltage Letter J		Voltage Letter L		Voltage Letter M	
	Catalog No	List Price $	Catalog No	List Price $	Catalog No	List Price $	Catalog No	List Price $	Catalog No	List Price $	Catalog No	List Price $
50	MT0050G		MT0050H		MT0050I		MT0050J		MT0050L		MT0050M	
75	MT0075G		MT0075H		MT0075I		MT0075J		—	—	MT0075M	
100	MT0100G		MT0100H		MT0100I		MT0100J		MT0100L		MT0100M	
150	MT0150G		MT0150H		MT0150I		MT0150J		MT0150L		MT0150M	
200	MT0200G		MT0200H		MT0200I		MT0200J		—	—	MT0200M	
250	MT0250G		MT0250H		MT0250I		MT0250J		MT0250L		MT0250M	
300	MT0300G		MT0300H		MT0300I		MT0300J		—	—	MT0300M	
350	MT0350G		MT0350H	—	MT0350I		MT0350J		MT0350L		MT0350M	
500	MT0500G		MT0500H		MT0500I		MT0500J		MT0500L		MT0500M	
750	MT0750G		MT0750H		MT0750I		—	—	MT0750L		MT0750M	
1000	MT1000G		MT1000H		MT1000I		—	—	—	—	MT1000M	
1500	MT1500G		MT1500H		MT1500I		—	—	—	—	—	—
2000	MT2000G		MT2000H		MT2000I		—	—	—	—	—	—
3000	MT3000G		MT3000H		MT3000I		—	—	—	—	—	—
5000	MT5000G		MT5000H		—	—	—	—	—	—	—	—

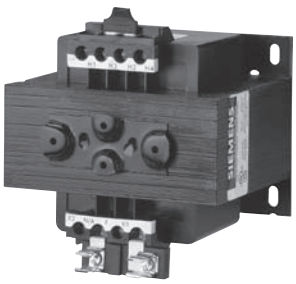

Ordering Information

- Use the Voltage Table to determine the primary and secondary voltage required.
- Field Modifications see page 17-114.
- Dimensions see page 17-157.
- Wiring Diagrams see page 17-195.
- Touchsafe cover chart see below.

Voltage Table

Primary Volts 50/60 Hz	Secondary Volts	Letter
240 X 480, 230 X 460, 220 X 440	120/115/110	A
240 X 480	24	B
120 X 240	24	C
550/575/600	110/115/120	E
380/400/415	110 X 220	I
208/230/460, 200/220/440, 240/480	24 X 115, 23 X 110, 25 X 120	J
380	24	P

VA Rating	Voltage Letter A		Voltage Letter B		Voltage Letter C		Voltage Letter E		Voltage Letter I		Voltage Letter J		Voltage Letter P	
	Catalog No	List Price $	Catalog No	List Price $	Catalog No	List Price $	Catalog No	List Price $	Catalog No	List Price $	Catalog No	List Price $	Catalog No	List Price $
50	**MTG0050A**		**MTG0050B**		**MTG0050C**		**MTG0050E**		**MTG0050I**		**MTG0050J**		**MTG0050P**	
75	**MTG0075A**		**MTG0075B**		**MTG0075C**		**MTG0075E**		**MTG0075I**		**MTG0075J**		**MTG0075P**	
100	**MTG0100A**		**MTG0100B**		**MTG0100C**		**MTG0100E**		**MTG0100I**		**MTG0100J**		**MTG0100P**	
150	**MTG0150A**		**MTG0150B**		**MTG0150C**		**MTG0150E**		**MTG0150I**		**MTG0150J**		**MTG0150P**	
200	**MTG0200A**		**MTG0200B**		**MTG0200C**		**MTG0200E**		**MTG0200I**		**MTG0200J**		**MTG0200P**	
250	**MTG0250A**		**MTG0250B**		**MTG0250C**		**MTG0250E**		**MTG0250I**		**MTG0250J**		**MTG0250P**	
300	**MTG0300A**		**MTG0300B**		**MTG0300C**		**MTG0300E**		**MTG0300I**		**MTG0300J**		**MTG0300P**	
350	**MTG0350A**		**MTG0350B**		**MTG0350C**		**MTG0350E**		**MTG0350I**		**MTG0350J**		**MTG0350P**	
500	**MTG0500A**		**MTG0500B**		**MTG0500C**		**MTG0500E**		**MTG0500I**		**MTG0500J**		**MTG0500P**	
750	**MTG0750A**		**MTG0750B**		**MTG0750C**		**MTG0750E**		**MTG0750I**		**MTG0750J**		**MTG0750P**	
1000	**MTG1000A**		**MTG1000B**		**MTG1000C**	—	—	—	—	—	**MTG1000J**		—	—
1500	**MTG1500A**		—	—	—	—	—	—	—	—	—	—	—	—
2000	**MTG2000A**		—	—	—	—	—	—	—	—	—	—	—	—
3000	**MTG3000A**		—	—	—	—	—	—	—	—	—	—	—	—
5000	**MTG5000A**		—	—	—	—	—	—	—	—	—	—	—	—

Touchsafe Covers For MT style CPT

VA Rating	Voltage Letter	Primary Side Touchsafe?	Secondary Side Touchsafe?	Secondary Side Fuse Clips?
50	A,B,C,D,E,F,G,H,J	Yes	Yes	Yes①
	I,L,M	Yes	Yes	No②
75	A,B,C,D,E,F,G,H,J	Yes	Yes	Yes①
	I,M	Yes	Yes	No②
100	A,B,C,D,E,F,G,H,J	Yes	Yes	Yes①
	I,L,M	Yes	Yes	No②
150	A,B,C,D,E,F,G,H,J	Yes	Yes	Yes①
	I,L,M	Yes	Yes	No②
200	A,B,C,D,E,F,G,H,J	Yes	Yes	Yes①
	I,M	Yes	Yes	No②
250	A,B,C,D,E,F,G,H,J	Yes	Yes	Yes①
	I,L,M	Yes	Yes	No②
300	A,B,C,D,E,F,G,H,J	Yes	Yes	Yes①
	I,M	Yes	Yes	No②
350	A,B,C,D,E,F,G,H,J	Yes	Yes	Yes①
	I,L,M	Yes	Yes	No②
500	A,B,C,D,E,F,G,H,J	Yes	No③	Yes①
	I,L,M	Yes	Yes	No②
750	A,B,C,D,E,F,G,H	Yes	No③	Yes①
	I,L,M	Yes	Yes	No②
1000	A,E,G,H	Yes	No③	Yes①
	I,M	Yes	Yes	No②
1500	A,G,H	Yes	No③	Yes①
	I	Yes	Yes	No②
2000	A,G,H	Yes	No③	Yes①
	I	Yes	Yes	No②
3000	A,G,H,I	Yes	Yes	No②
5000	A,G,H	Yes	Yes	No②

Touchsafe Covers For MTG style CPT

VA Rating	Voltage Letter	Primary Side Touchsafe?	Secondary Side Touchsafe?	Secondary Side Fuse Clips?④
50	A,B,C,E,I,J,P	Yes	Yes	No
75	A,B,C,E,I,J,P	Yes	Yes	No
100	A,B,C,E,I,J,P	Yes	Yes	No
150	A,B,C,E,I,J,P	Yes	Yes	No
200	A,B,C,E,I,J,P	Yes	Yes	No
250	A,B,C,E,I,J,P	Yes	Yes	No
300	A,B,C,E,I,J,P	Yes	Yes	No
350	A,B,C,E,I,J,P	Yes	Yes	No
500	A,B,C,E,I,J,P	Yes	Yes	No
750	A,B,C,E,I,J,P	Yes	Yes	No
1000	A,B,C,J	Yes	Yes	No
1500	A	Yes	Yes	No
2000	A	Yes	Yes	No
3000	A	Yes	Yes	No
5000	A	Yes	Yes	No

① Needs US2:KCCSECFCVR to be Touchsafe

② If secondary fuse holder is required, use KCCF1G panel mount fuse holder

③ Needs US2:KCCSECFCVR2

④ International fusing options, see CPT accessory page

Accessories—Class SMF

Description	Catalog Number	List Price $
Handle Guard Kit with Padlock Provision	**SMFFL1**	
Emergency Off Actuator	**SMFPB1**	
Additional Key for Key Operated Devices	**SMFFK1**	

Accessories—Class MMS, MRS

Description	Catalog Number	List Price $
Handle Guard Kit with Padlock Provision	**SMFFL1**	
Emergency Off Actuator	**SMFPB1**	
Additional Key for Key Operated Devices	**SMFFK1**	

Pilot Light Kits—Class MMS, MRS①

Device	Voltage Rating	Red Pilot Light		Green Pilot Light	
		Catalog Number	List Price $	Catalog Number	List Price $
Class SMF	115–277V AC	**SMFPL10**		**SMFPL10G**	

Pilot Light Kits—Class MMS, MRS①

Device	Voltage Rating	Red Pilot Light		Green Pilot Light	
		Catalog Number	List Price $	Catalog Number	List Price $
Class MMS	110–120V AC	**SMFPL11**		**SMFPL11G**	
	208–277V AC	**SMFPL12**		**SMFPL12G**	
	440–600V AC	**SMFPL13**		**SMFPL13G**	

Enclosures—Class SMF

Enclosure Type	For Use With SMF	Catalog Number	List Price $
Standard Size NEMA 1 General Purpose	FO1, FO1P, FO2, FO2P, FO3, FO3P, FO4, FO4P	**SMFFE2**	
Oversized NEMA Type 1 General Purpose	FO1, FO1P, FO2, FO2P, FO3, FO3P, FO4, FO4P	**SMFFE1**	
NEMA 3R, 4, 12 Watertight Dust-tight	FO1, FO1P, FO2, FO2P, FO3, FO3P, FO4, FO4P	**SMF40BC2**	

Enclosures—Class MMS

Enclosure Type	For Use With MMS	Catalog Number	List Price $
Standard Size NEMA 1 General Purpose	KO1, KO1P, KO1B, KO2, KO2A, KO2B, KO3, KO3A, KO3B, KO4, KO4A, KO4B	**MMSKE3**	
Oversized NEMA Type 1 General Purpose	KO1, KO2B, KO2C, KO3, KO3A, KO3B, KO4, KO4B, KO4C, KO2	**SMFKE1**	
Jumbo NEMA Type 1 General Purpose	KO1, KO2B, KO2C, KO3, KO3A, KO3B, KO4, KO4B, KO4C, KO2	**SMFKE2**	
NEMA 3R, 4, 12 Watertight Dust-tight	KO1, KO2B, KO2C, KO3, KO3A, KO3B, KO4, KO4B, KO4C	**SMF40BC2**	

Nameplates—Class SMF

For Use On	Nameplate Marking	Without Pilot Light		With Pilot Light	
		Catalog Number	List Price $	Catalog Number	List Price $
Standard commercial switch box cover including stainless steel plates	None	**SMFFN2**		—	—
Stainless Steel Plate	None	**SMFFSN3**		**SMFFSN4**	
NEMA 1 surface mounted enclosure or gray flush plate	None	**SMFFN30**		**SMFFN40**	
	High	**SMFFN31**		**SMFFN41**	
	Low	**SMFFN32**		**SMFFN42**	

Nameplates—Class MMS

For Use On	Nameplate Marking	Without Pilot Light		With Pilot Light	
		Catalog Number	List Price $	Catalog Number	List Price $
Standard commercial switch box cover including stainless steel plates	None	**SMFFN1**		—	—
NEMA 1 surface mounted enclosure or gray flush plate	None	**SMFFN10**		**SMFFN20**	
	High	**SMFFN11**		**SMFFN21**	
	Low	**SMFFN12**		**SMFFN22**	
	Forward	**SMFFN13**		—	—
	Reverse	**SMFFN14**		**SMFFN24**	

Replacement Parts—Class SMF, MMS

Description	Catalog Number	List Price $
Replacement Toggle Kits:Type FW and KW (NEMA 4 Metallic Enclosure)	**SMFHW1**	

① Pilot lights can be field installed on standard NEMA 1 general purpose surface mount enclosures, and NEMA 3R, 4 and 12 enclosures only.
For flush mounting units a complete switch unit with pilot light must be ordered.

3RV2901-1D

3RV2901-1A

3RV2922-1CP0

3RV2902-1DP0

3RV2928-1H

3RV2901-0H

Description	Type		Catalog Number	List Price $
Auxiliary Contact Blocks				
Plug in contact block 1 block per 3RV mountable at the front	1 SPDT contact, NO/NC 1 NO + 1 NC 1 SPDT contact NO/NC electronic contact④		**3RV2901-1D** **3RV2901-1E** **3RV2901-1G**	
Side mount auxiliary contact with screw connection 1 side mount auxiliary contact per 3RV mountable on the left-hand side	1 NO + 1 NC 2 NO 2 NC 2 NO + 2 NC		**3RV2901-1A** **3RV2901-1B** **3RV2901-1C** **3RV2901-1J**	
Signaling Contact Block				
Signaling contact 1 signaling contact per 3RV mountable on the left-hand side. Can also be fitted together with side mount auxiliary contact.	1NO + 1NC for any trip + 1NO + 1NC for short circuit trip only.		**3RV2921-1M**	
Auxiliary Releases				
Undervoltage release 1 undervoltage release per 3RV mountable on the right-hand side. Cannot be fitted together with shunt trip.	AC 50Hz — 230V 415V	AC 60Hz 120V 208V 240V 480V	**3RV2902-1AF0** **3RV2902-1AM1** **3RV2902-1AP0** **3RV2902-1AV1**	
Undervoltage release with early make contacts (2NO) 1 undervoltage release per 3RV mountable at the right-hand side. Cannot be fitted together with shunt trip.	AC 50Hz 230V 415V	AC 60Hz 240V 480V	**3RV2922-1CP0** **3RV2922-1CV1**	
Shunt trip 1 shunt trip per 3RV mountable at the right-hand side. Cannot be fitted together with undervoltage release.	AC 50Hz/60Hz① 20–24V 90–110V 200–240V 350–415V	DC② 20–70V 70–190V 190–330V 330–500V	**3RV2902-1DB0** **3RV2902-1DF0** **3RV2902-1DP0** **3RV2902-1DV0**	
Pilot Lights	AC 50Hz/60Hz			
For NEMA 1 enclosure only. Kit includes Red, Green, and Amber lenses	24V 120V 240V 480V 600V		**49SBLBJ**③ **49SBLBF**③ **49SBLBG**③ **49SBLBH**③ **49SBLBE**③	
Lug Kit				
Required for Type E Manual Combination Starter	For 3RV with amp range: 0.11-22A up to 480V Max. 0.11-12.5A up to 575V Max		**3RV2928-1H**	
Mounting				
Push-in Mounting Hole Kit For screw panel mounting of the 3RV	Four mounting holes required for each 3RV.		**3RV2928-0B**	
Sealing device				
Adjustment Dial covers	For sealing the FLA adjustment dial (Kit includes 10 covers)		**3RV2908-0P**	
Front mount auxiliary cover	For sealing the front mount auxiliary opening. (Kit includes 10 covers)		**3RV2901-0H**	
Door Operators				
Thru-the-door operators Rotary operating mechanism, rated NEMA 12, lockable with up to 3 padlocks in the OFF position. Includes extension shift and connecting element for the 3RV.	With Black Handle	130 mm depth	**3RV2926-0B**	
		330 mm depth with supporting bracket	**3RV2926-0K**	

① 100% on time.
② 5 sec. max. on time.
③ Product Category: PILO.
④ Compatible for use in dusty atmospheres. Contacts rated for 1-300mA @ 3-60V.

Push Buttons and Selector Switches	Class	Enclosure Type	Controller Size or (Lighting Rating)	Type	Catalog Number	List Price $
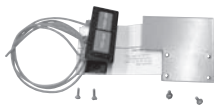 **49SBPB5**	14, 40, LC, LEN, CLM①	Open	00-4	Start, Stop Push Buttons	**49SAPB5**	
				Hand-Off-Auto Selector Switch	**49SASB1**	
				Off-On Selector Switch	**49SASB4**	
		1	00-4 or (20–100A)	Start, Stop Push Buttons	**49SBPB5**	
				Hand-Off-Auto Selector Switch	**49SBSB1**	
				Off-On Selector Switch	**49SBSB4**	
			5-8 or (200–400A)	Start, Stop Push Buttons	**49SAP05**	
				Hand-Off-Auto Selector Switch	**49SAS01**	
49SBSB1				Keyed Hand-Off-Auto (key removable in all positions)	**49SAS09**	
				Off-On Selector Switch	**49SAS04**	
		12, 4/4X	00-8 or (20–400A)	Start, Stop Push Buttons	**49SAP05**	
				Hand-Off-Auto Selector Switch	**49SAS01**	
				Keyed Hand-Off-Auto (key removable in all positions)	**49SAS09**	
				Off-On Selector Switch	**49SAS04**	
	22, 43	Open	00-4	Forward-Off-Reverse Selector Switch	**49SASB2**	
		1	00-4	Forward-Off-Reverse Selector Switch	**49SBSB2**	
			5-8	Forward, Reverse, Stop Push Buttons	**49SAP02**	
				Forward-Off-Reverse Selector Switch	**49SAS02**	
		12, 4/4X	0-8	Forward, Reverse, Stop Push Buttons	**49SAP02**	
				Forward-Off-Reverse Selector Switch	**49SAS02**	
49SAP05	30 (2S1W)	Open	0-4	High-Off-Low Selector Switch	**49SASB3**	
		1	0-1 ¾	High-Off-Low Selector Switch	**49SBSB3**	
			2-4	High, Low, Stop Push Buttons	**49SAP03**	
				High-Off-Low Selector Switch	**49SAS03**	
		12, 4/4X	0-4	High, Low, Stop Push Buttons	**49SAP03**	
				High-Off-Low Selector Switch	**49SAS03**	
	30 (2S2W)	Open	0-4	High-Off-Low Selector Switch	**49SASB3**	
		1	0-4	High-Off-Low Selector Switch	**49SBSB3**	
		12, 4/4X	0-4	High, Low, Stop Push Buttons	**49SAP03**	
				High-Off-Low Selector Switch	**49SAS03**	
49SAS01	17, 18, 36, 37, 83, 84, LED,LEF, LEB, CMN①, CMF①, CMB①	1, 12, 4/4X	0-8 (20-400A)	Start, Stop Push Buttons	**49SAP05**	
				Hand-Off-Auto Selector Switch	**49SAS01**	
				Keyed Hand-Off-Auto (key removable in all positions)	**49SAS09**	
				Off-On Selector Switch	**49SAS04**	
	25, 26	1, 12, 4/4X	0-8	Forward, Reverse, Stop Push Buttons	**49SAP02**	
				Forward-Off-Reverse Selector Switch	**49SAS02**	
	32	1, 12, 4/4X	0-4	High, Low, Stop Push Buttons	**49SAP03**	
				High-Off-Low Selector Switch	**49SAS03**	

① To be used for replacement of switch only. Does not include relay or extra contact block on 30-400A CLM and CM Lighting Contactors. Class 49SB not available for these devices.

Description	Class	Enclosure Type	Controller Size or (Lighting Rating)	Lens Color(s)	Legend(s)	Voltage	Catalog Number	List Price $
49SBLBF	14, 40, 22②, 43②, 30 (2S2W)③, LC, LEN, CLM	1	00–4 or (20–200A)	Red, Green, Amber	ON, RUN, OFF①, OL TRIPPED⑤, FORWARD, REVERSE, LOW, HIGH	24 Vac	**49SBLBJ**	
						120 Vac	**49SBLBF**	
						208/240/277 Vac	**49SBLBG**	
						480 Vac	**49SBLBH**	
						600 Vac	**49SBLBE**	
		1 12, 4/4X	5–8 or (300–400A) 0–8 or (20–400A)	Red (Transformer Type)	ON	24 Vac (Full Voltage)	**49SPL0BRJ**	
						120 Vac	**49SPL0BRF**	
						240 Vac	**49SPL0BRG**	
						480 Vac	**49SPL0BRH**	
						600 Vac	**49SPL0BRE**	
				Green (Transformer Type)	OFF④	24 Vac (Full Voltage)	**49SPL0AGJ**	
						120 Vac	**49SPL0AGF**	
						240 Vac	**49SPL0AGG**	
						480 Vac	**49SPL0AGH**	
						600 Vac	**49SPL0AGE**	
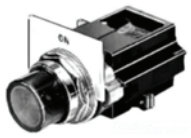 **49SPL0BRF**	30 (2S1W)②	1	0–4	Red, Green, Amber	ON, RUN, OFF①, OL TRIPPED⑤, FORWARD, REVERSE, LOW, HIGH	24 Vac	**49SBLBJ**	
						120 Vac	**49SBLBF**	
						208/240/277 Vac	**49SBLBG**	
						480 Vac	**49SBLBH**	
						600 Vac	**49SBLBE**	
		1	2–4	Red (Transformer Type)	ON	24 Vac (Full Voltage)	**49SPL0BRJ**	
						120 Vac	**49SPL0BRF**	
						240 Vac	**49SPL0BRG**	
						480 Vac	**49SPL0BRH**	
						600 Vac	**49SPL0BRE**	
		12, 4/4X	0–4	Green (Transformer Type)	OFF④	24 Vac (Full Voltage)	**49SPL0AGJ**	
						120 Vac	**49SPL0AGF**	
						240 Vac	**49SPL0AGG**	
						480 Vac	**49SPL0AGH**	
						600 Vac	**49SPL0AGE**	
	17, 18, 25②, 26②, 32②, 36, 37, 81, 83, 84, 87, 88, LC, LED, LEF, LEB, CMN, CMF, CMB	1, 12, 4/4X	0–6 (20–400A)	Red (Transformer Type)	ON	24 Vac (Full Voltage)	**49SPL0BRJ**	
						120 Vac	**49SPL0BRF**	
						240 Vac	**49SPL0BRG**	
						480 Vac	**49SPL0BRH**	
						600 Vac	**49SPL0BRE**	
				Green (Transformer Type)	OFF④	24 Vac (Full Voltage)	**49SPL0AGJ**	
						120 Vac	**49SPL0AGF**	
						240 Vac	**49SPL0AGG**	
						480 Vac	**49SPL0AGH**	
						600 Vac	**49SPL0AGE**	
49SBLBL	Lens Kit ONLY (30 (2S1W)) (14, 40, 22, 43, 30 (2S2W), LC, LEN, CLM)	1	0–1 ¾ 00–4 or (20–200A)	Red, Green, Amber	—	—	**49SBLBL**	
	LED bulb BA9s type Used to replace incan-decsent or LED bulbs⑥	—	—	Red	—	24 V AC/DC	**52AED2**	
				Green			**52AED3**	
				Amber			**52AED4**	
				White			**52AEDB**	
		—	—	Red	—	120 - 600 V AC/DC	**52AEB2**	
				Green			**52AEB3**	
				Amber			**52AEB4**	
				White			**52AEBB**	

① "Off" PL requires: (1) N.C. aux contact, 49AB01 on sizes 00-4.
② Class 22, 25, 26, 30, 32, 43, 83 & 84 requires qty. of (2) pilot light kits. Does not apply to 49SB kits. Select appropriate legend plate as a separate item per type of starter; either "FORWARD" & "REVERSE" or "LOW" & "HIGH".
③ 2S2W is starter size 0–4.
④ Includes NC aux contact for NEMA starter Size 0–4.
⑤ The "OL TRIPPED" pilot light with a bimetal OLR, requires the OLR to have a N.O. contact as well as a N.C. contact.
⑥ LED bulb applies to only 49SP* pilot lights. They do not apply to 49SB* pilot lights.

Solid State Control Module Kits For Lighting and Heating Contactors①

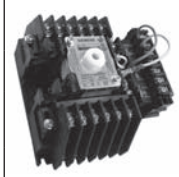

CLM 20 Amp Contactor Kit Description	Accessory	Catalog Number	List Price $	Accessory	Catalog Number	List Price $	Accessory	Catalog Number	List Price $
120V AC, 50/60 Hz	47 (2-Wire Control) (2W)	**CLM4379771**		48 (3-Wire Control) (3W)	**CLM4379781**		49 (Start/Stop Control) (3WS)	**CLM4379791**	
24V AC/DC, 50/60 Hz		**CLM4379772**			**CLM4379782**			**CLM4379792**	
240/277V AC, 50/60 Hz		**CLM4379773**			**CLM4379783**			**CLM4379793**	

Protective Shielding for NEMA Products

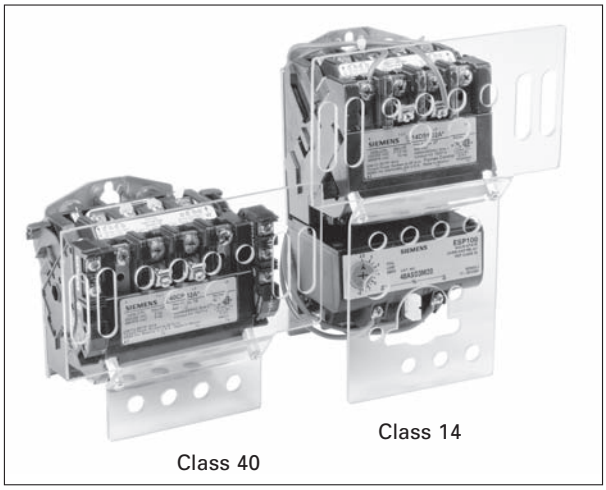

Disconnect with protective shield

Class 14, 22, 30, 40, 43

Contactor or Starter Size	00–1¾	List Price $	2–2½	List Price $	3–3½	List Price $	4	List Price $
Contactor Shield Catalog Number	**49PSC1**		**49PSC2**		**49PSC3**		**49PSC4**	
Starter Shield Catalog Number	**49PSS1**		**49PSS2**		**49PSS3**		**49PSS4**	

Class 17, 25, 32, 87

Disconnect Size	Catalog Number	List Price $
30A	**49PSD5**	
60 & 100A	**49PSD6**	
200A	**49PSD7**	

Power Pole Kits	Class	Enclosure type	Contactor Size (Amp)	Description	Field Kit Catalog No.
	LC	**Open, 1, 12, 4/4X**	**30**	**Single power pole** **Double power pole**	**49LCPP1A** **49LCPP2A**

Electrically Held to Mechanically Held Conversion Modules	Class	Enclosure type	Contactor Size (Amp)	Description	Field Kit Catalog No.
	LC	**Open, 1, 12, 4/4X**	**30**	**2-wire, 24VAC** **2-wire, 110-120VAC** **2-wire, 200-277VAC** **3-wire, 24VAC** **3-wire, 110-120VAC** **3-wire, 200-277VAC**	**49LCCM1A** **49LCCM2A** **49LCCM3A** **49LCCM4A** **49LCCM5A** **49LCCM6A**

① These kits are only for use with 20A mechanically held lighting contactors.

Starter/Contactor Auxiliary Contact Kits

Description	Class	Size	Type	Catalog Number	List Price $
	14, 17, 18, 22, 25, 26, 30, 32, 36, 37, 40, 43, 83, 84, 87, 88	00-4	1 NO	**49AB10**	
			1 NC	**49AB01**	
			1 NC Early Break	**49AB01EB**	
			1 NC Late Break	**49AB01LB**	
			1 NC Extra Late Break	**49AB01XLB**	
			1 NO Extra Late Make	**49AB10XLM**	
			1 NO & 1 NC	**49AB11**	
			2 NO	**49AB20**	
			4 NO	**49AB40**	
			3 NO & 1 NC	**49AB31**	
			2 NO & 2 NC	**49AB22**	
	14, 17, 18, 22, 25, 26, 36, 37, 40, 43, 87, 88	5, 6	2 NO	**3RH1921-1EA20**	
			1 NO & 1 NC	**3RH1921-1DA11**	
			2 NC	**3RH1921-1EA02**	
	14, 17, 18, 22, 25, 26 40, 43	7, 8	1 NO & 1 NC (Inside L or R)	**49CAL18-11**	
			1 NO & 1 NC (Outside L or R)	**49CAL18-11B**	
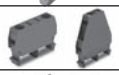	LC	30	1 NO/NC	**49LCAC1PA**	
			2 NO/NC	**49LCAC2PA**	
	LE	20	Front Mounted 1 NO/NC	**3RH2911-1HA11**	
		30	Side Mounted 1 NO/NC	**3RH2911-1DA11**	
		60-400	Side Mounted 1 NO/NC	**3RH1921-1EA11**	
	CLM, CMN, CMF, CMB	20 Amps	1 NO/NC SPDT	**CLM4097291**	
			2 NO/NC SPDT	**CLM4097292**	
		30-200 Amps	1 NO & 1 NC	**CLMFCAK11**	
			2 NC	**CLMFCAK02**	
			2 NO	**CLMFCAK20**	
			1 Coil Clearing NO & NC	**CLMFCCK11**	
		300-400 Amps	1 NO & 1 NC	**CLMHCAK11**	
			2 NC	**CLMHCAK02**	
			2 NO	**CLMHCAK20**	
			1 Coil Clearing NO & NC	**CLMHCCK11**	

Disconnect Auxiliary Switch Kits

Description	Class	Disconnect Amp or CB Rating	Type	Catalog Number	List Price $
Non-fusible or Fusible Type	17, 25, 32, 37, 83, 84, 87, 88, LED, LEF, CMN, CMF	30 - 200A	2 NO/2 NC DPDT (NEMA A600)	**HA261234**	
MCP	18, 26, 32, 37, 83, 84, 87, 88, LEB, CMB	3A–125A	1 NO/1 NC 240V	**A02ED62**	
		250A	1 NO/1 NC 480V	**A02FD64**	
		400A-600A	(2) 1 NO/1 NC SPDT-480V	**A02JLD64**	

Control Power Transformer Kits①③

Description	Recommended Transformer Size: Control Size	Recommended Transformer Size: Transformer VA	VA Rating	Catalog Number	List Price $	Transformer Table: Primary Volts	Transformer Table: Secondary Volts	Transformer Table: Code
Transformer 50/60HZ	00–2½	45 or 50③	45 VA	**KT*050②③**		120	24	**1**
	3–3½	75	50 VA	**KT*050P③**		208	24	**G**
	4	150	100 VA	**KT*100**		208	120	**H**
	5-6	150	150 VA	**KT*150**		240/480	24	**4**
	7-8	300	200 VA	**KT*200**		240/480	120	**8**
	Lighting Control		300 VA	**KT*300**		277	24	**5**
	CLM		500 VA	**KT*500**		277	120	**7**
	20A, 2 - 12P	150				600	24	**6**
	30A, 3P	100				600	120	**9**
	30A, 6 - 12P	200						
	60A, 3P	100						
	60A, 4 - 6P	150						
	60A, 8 - 12P	250						
	100/200A, 3P	200						
	100/200A, 5P	250						
	300/400A, 3P	250						
	LC & LE							
	LC 30A, 2-12P	100						
	LE 20, 30, 60A, 3 & 4P	45						
	LE 30A, 6P	45						
	LE 30A, 9-12P	100						
	LE 60A, 6-12P	150						
	LE 100, 200A, 3P	100						
	LE 300, 400A, 3P	150						

Replace * with code from Transformer table. Kits used with NEMA 1 general purpose lift-off cover type require extra wide enclosure.
Class 14 Sizes 0-2½
Class 30 (2S2W) Sizes 0-2½
Class 30 (2S1W) Sizes 0-1¾

① Installation of CPTs may require a larger enclosure.
② 45VA transformer kits will include secondary but not primary fusing. Sizes 50VA and higher include 2-pole primary fusing and 1-pole secondary fusing.
③ For 24VAC control a minimum of 100VA CPT is required.

Field Modification Kits

Accessories

Description				Catalog Number	List Price $
	ESP200 Tamper Resistance Cover			**49ASTC1** **3UB89848**	
	ESP100/200 Mounting Plate	**Frame Size**	**Controller Size**		
		A or A1	00 - 1 3/4	**49ASMP1**	
		B	2 -2 1/2	**49ASMP2**	
		B	3-4	**49ASMP3**	
	Mounting Kit			**49ASMS1**	
	Universal Reset Operator 8" for class 36, 37 and 87 in NEMA 1, 12 and 3/3R			**49MARB**	
	Overload Relay Reset Operator for Class 14, 22, 30 and 83 non-combination starters in NEMA type 1, 12 and 4/4X enclosures			**49MBRS**	
	Overload Relay Reset Operator for Class 17, 18, 25, 26, 32 and 84 combination starters in NEMA type 1 enclosures			**49MBRS1**	
	Overload Relay Reset Operator for Class 17, 18, 25, 26, 32 and 84 combination starters in NEMA type 12 and 4/4X enclosures			**49MBRS2**	
	Overload Relay Reset Operator with red button for any Class in NEMA type 1, 3R, 4/4X and 12 enclosures with a 30mm hole			**49MARSR**	
	ESP200 Reset Extender			**49ASRE**	
	Protective Boot Offers protection from ice and foreign substances from interfering with button operation. For use with 49MARSR reset.			**52AABA**	
	Current Transformer 300:5 use with **3UB81234JW2**			**97CT005**	
	Current Transformer 400:5 use with **3UB81234KW2**			**97CT006**	
	Current Transformer 600:5 use with **3UB81234LW2**			**97CT008**	
	Current Transformer 750:5 use with **3UB81234MW2**			**97CT009**	
	Current Transformer 1200:5 use with **3UB81234NW2**			**97CT012**	

Miscellaneous Kits

Description			Class	Encl. Type	Controller Size	Catalog Number	List Price $
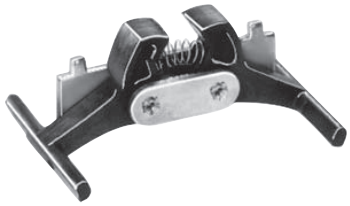	Mechanical Interlock for Horizontally Mounted Contactors	Includes wire	14, 40	Open	00–1 1¾ 2, 2½ 3, 3½ 4	**49CCF22H** **49EEF22H** **49GGF22H** **49HHP22H** **49JJG22H**	
		Interlock Only	14, 40	Open	5, 6	**3RA1954-2A**	
		Wire Kit Only			5 6	**3RA1963-2A** **3RA1973-2A**	
		Base Plate Only			5 6	**3RA1962-2A** **3RA1972-2A**	
		Mechanical Interlock	14, 40	Open	7 8	**49VM750H** **49VM1650H**	
		Includes wire & mounting plate	14, 40	Open	00–1 1¾ 2, 2½ 3, 3½ 4	**49CCF22HP** **49EEF22HP** **49GGF22HP** **49HHP22HP** **49JJG22HP**	
		Includes mounting plate (Different Frame Sizes)	14, 40	Open	Left Right 2, 2½ 3, 3½ 3, 3½ 2, 2½	**49L107944** **49L107945**	
	Surge Suppressor	Surge Suppressor for 120V AC coil. Limits transient voltage produced by the coil to 220% maximum peak line volts.	All but Class LC, LE, CLM	All	00–4①	**49D26344**	
	Auxiliary Power Pole	NO 36A at 600V AC Max NC 25A at 600V AC Max	All but Class LC, LE, CLM	All	00–1¼	**49SAF0** **49SAFC**	
	Main Contacts Lighting Contactors	Top or Bottom, 2-Pole Top, 3-Pole Top or Bottom, 4-Pole Top or Bottom, 6-Pole	CLM	All	20 Amps	**CLM4097331** **CLM4097332** **CLM4097333** **CLM4097334**	
	Load Side Power Take Off Kit	Includes 3 power lugs for making extra connections to the load side of the contactor	All but Class LC, LE, CLM	All	00–1¾	**49SAE**	
	Lug Kit for Contactors Item — Wire Range 49SAAF — 2-14 49SAAH — 2/0-14 75D35994001 — 250MCM-6	For AL/CU Wire	14, 40	All	2-2½ 3-3½ 4 Line 4 Load	**49SAAF③** **49SAAH③** **75D35994002③**	
		For AL/CU Wire	14, 40	All	5, 6	**3RT1966-4G②**	
		Use CU Only	14, 40	All	7 8	**49ZATK750-3②** **49ZATK1650-6②**	
	Three Conductor Ground Lug Kit Meets UL 508 and CSA Standard 22.2 No 14-1973	2-14 AWG AL/CU Wire	All	All	All	**75D28182001**	
	Lightning Arrestor		All	All	All	**49D45584002**	
	Backspin Timer	On delay timer that reduces risk of starting into a backspin	87, 88	All	All	**3RP2025-1AQ30** **3RP2025-1AP30**	
	Hole Plug	Covers the hole that is typically used for the conduit hub	87	All	1-4	**49D41149006**	
	Hole Plug	Covers the hole in the enclosure door/cover normally filled by overload reset 49MBRS. Hole plug is used for enclosed contactors.	40, 43, LC, LE, CLM & CM	1	All	**49MZPB2**	

Illustration	Description	Contactor	Wire Size	Catalog Number	List Price $
 3RT1966-4G	**Lug Kit** 1 Kit = 1 Terminal block. 1 kit necessary for each line and load.	NEMA size 4 (Vacuum) NEMA size 5 NEMA size 6	2/0 to 600 MCM, max. one 500MCM & one 600MCM	3RT1966-4G	

① Surge Suppression for NEMA sizes 5 – 8 are supplied internal with the coil. For size 4 panel mount.

② Only 3 lugs are suplied for line or load. If lugs for line and load are required order 2 kits.

③ Lug Kit for contactors include 3 lugs for line or load. **75D35994001** for line side. **75D35994002** for load side.

Field Modification Kits

Fused and Non-Fused Disconnect Switch Kits②

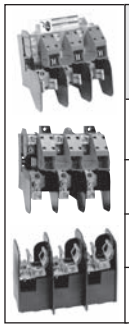

Basic Switch Ampere Rating	Switch Catalog Number Non-Fused	List Price $	Switch Catalog Number Fused	List Price $	Kit Description	Load Base Catalog Number Class J	List Price $	Load Base Catalog Number Class H③	List Price $	Lug Wire Size
30	HNB612		HFB21		30A, 250V	—	—	HBB21		#14-2 AWG (Cu/Al)
			HFB612		30A, 600V	HBB612		HBB612		
60	HNB623		HFB22		60A, 250V	—	—	HBB22		#14-2 AWG (Cu/Al)
			HFB62		60A, 600V	HBB62		HBB62		
100	HNB623		HFB63		100A, 250V	—	—	HBB63		#14-1/0 AWG (Cu/Al)
					100A, 600V	HBB63				
200	HNB64		HFB64		200A, 250V	—	—	HBB64		#6-300 AWG (Cu/Al)
					200A, 600V	HBB64				

Class R Fuse Conversion Kits

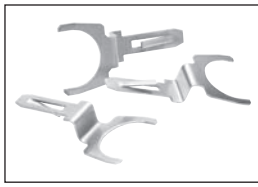

Catalog Number	Description	List Price $
HR21	30A, 240V	
HR612	30A, 600V	
HR612	60A, 240V	
HR62	60A, 600V	
HR63	100A, 240/600V	
HR64	200A, 240/600V	

Hazardous Location Accessories For Enclosure Types 7 & 9

		Description	Conduit Size Inches	Catalog Number	List Price $
Breather/Drain		Install in bottom as drain. Install in top as breather. Suitable for Class I groups C & D and for Class II groups F & G applications only. for ½" NPT.		51AADB	

Metal Conduit Hubs

Description	Conduit Size	Class	Controller Size	Enclosure Type	Milbank Catalog No.④
	1"	87	All	3R	A7514
	1 1/2"				A7516
	2"				A7517
	2 1/2"				A7518

① Product Category: PILO.
② Product Category: HDSS.
③ For Class R fuses order Class H kit from this table and the Class R conversion kit.
④ Milbank catalog numbers are for reference only. Milbank conduit hubs are not sold by Siemens but can be purchased at a typical electrical hardware and supply distributor.

Sirius 3RB20

Illustration	Description		For Overload Type	Catalog Number	List Price $
	Reset mechanisms				
Reset plunger with reset button	**Reset plunger** Mounts directly to overload relay. Requires separate reset operator in enclosure door. Kit includes reset plunger, holder and funnel.		3RB206	**3RU1900-1A**	
	Flexible cable reset mechanism Requires a 6.5 mm hole in the enclosure with a maximum enclosure thickness of 8 mm.	Cable length 15.75 in (400mm)	3RB206	**3RU1900-1B**	
Flexible reset		Cable length 23.62 in (600mm)		**3RU1900-1C**	
	Covers Tamper resistant cover for current setting and manual/automatic reset button.		3RB206	**3RB2984-0**	

Competitive Retrofit Overload Plates

Manufacturer	NEMA Size	Plate Part Number	List Price $
A-B	0, 1	**49D57090**	
A-B	2	**49D57161**	
Sq. D	0, 1	**49D57091**	

Electronic Coil System with Remaining Lifetime Indication and 24VDC PLC Output

Class	Size	Model Type	21 - 27V		96 - 127V		200 - 277V	
			Catalog Number	List Price $	Catalog Number	List Price $	Catalog Number	List Price $
All	5	P	–	–	**3RT1965-5PF31**		**3RT1965-5PP31**	
		V	–	–	**3RT1966-5PF31**		**3RT1966-5PP31**	
	6	P	–	–	**3RT1975-5PF31**		**3RT1975-5PP31**	
		V	–	–	**3RT1976-5PF31**		**3RT1976-5PP31**	

Fuse Blocks, Touch-Safe Terminal Covers

Catalog Number	Description	List Price $
KCCF1G	SECONDARY FUSE BLOCK,1P,250V MAX	
KCCFBCK	SINGLE POLE FUSE BLOCK COVER KIT	
KCCFP2RG	2 Pole PRIMARY FUSE BLOCK,2P,600V MAX (block only)	
KCCFPX2R	2 Pole PRIMARY FUSE BLOCK KIT with wire Leads	
US2:49FCCPT	Secondary Fuse Clips, 2 per pack	
US2:49JUCPT	Terminal Jumpers	
US2:KCCSECFCVR	Terminal touchsafe cover Secondary Side: VAs 45 thru 350	
US2:KCCSECFCVR2	Terminal touchsafe cover Secondary Side: VAs 500 thru 2K	
US2:KCCFP3POLE	3 pole fuse blk (2 pole primary and 1 pole secondary)	

International Fusing①

Catalog Number	Description	List Price $
8WA1011-1SF12	1-Pole Fuse Block, Touch-Safe. Up to 6.3A for 5 mm × 20 mm or 5 mm × 25 mm (Requires DIN Rail Mounting)	
3NW7013	1-Pole Fuse Block, Touch-Safe 32A, for 10 × 38 mm Cylindrical Fuses. (Requires DIN Rail Mounting.)	
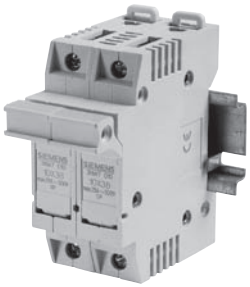 3NW7023	2-Pole Fuse Block, Touch-Safe 32A, for 10 × 38 mm Cylindrical Fuses. (Requires DIN Rail Mounting.)	
3NW7111	1-Pole Fuse Block, Touch-Safe 4-50A, for 14 × 51 mm Cylindrical Fuses. (Requires DIN Rail Mounting.)	
8WA1815	Fuse Block DIN Rail Mounting for separate screw mounting to panel. (Max 2-pole 2-25A size per rail.) (Max 1-pole 4-50A size per rail.)	

① Product Category: IEC.

49	E	B	14	E	B	11	07	05	R

Class
49 — Field Kit

Type
E — Enclosure Only

Model
B — Model
C — 2002

Product Class
14 — Class 14, 40
22 — Class 22, 43
30 — Class 30

Starter Size
E — 00, 0, 1, 1¾
G — 2, 2½
I — 3, 3½
J — 4

NEMA Type
B — NEMA 1
0 — NEMA 12
W — NEMA 4 S.S.

Height (In Inches)

Width (In Inches)

Depth (In Inches)

Reset Installation
R — Reset

Non-Reversing Starters & Contactors Class 14, 40

	NEMA 1 General Purpose (Clamshell)②④					NEMA 4/4X Stainless① Watertight, Dust-tight, Corrosion Resistant③⑥					NEMA 12/3/3R① Industrial Use, Weatherproof③⑤				
	Without CPT		With CPT (Extra Wide)			Without CPT		With CPT (Extra Wide)			Without CPT		With CPT (Extra Wide)		
	Model C Enclosure		Model C Enclosure			Model B Enclosure		Model B Enclosure			Model B Enclosure		Model B Enclosure		
Size	Catalog Number	List Price $	Catalog Number	Max CPT VA	List Price $	Catalog Number	List Price $	Catalog Number	Max CPT VA	List Price $	Catalog Number	List Price $	Catalog Number	Max CPT VA	List Price $
00–1¾	49EC14EB110705R		49EC14IB201208R	200		49EB14EW130806R		49EB22EW131306R			49EB14E0130806R		49EB22E0131306R		
2, 2½	49EC14GB140807R		49EC14IB201208R	200		49EB14GW160907R		49EB22GW161406R			49EB14G0160907R		49EB22G0161406R		
3, 3½	49EC14IB201208R		49EC14IB201208R	100		49EB14JW261408R		49EB14JW261408R			49EB14J0261408R		49EB14J0261408R		
3, 3½	—	—	49EC14JB251409R	250		—	—	—		—	—	—	—		—
4	49EC14JB251409R		49EC14JB251409R	300		49EB14JW261408R		49EB22JW302410R			49EB14J0261408R		49EB22J0302410R		

Reversing Starters & Reversing Contactors Class 22, 43

	NEMA 1 General Purpose (Clamshell)②④					NEMA 4/4X Stainless① Watertight, Dust-tight, Corrosion Resistant③⑥					NEMA 12/3/3R① Industrial Use, Weatherproof③⑤				
	Without CPT		With CPT (Extra Wide)			Without CPT		With CPT (Extra Wide)			Without CPT		With CPT (Extra Wide)		
	Model C Enclosure		Model C Enclosure			Model B Enclosure		Model B Enclosure			Model B Enclosure		Model B Enclosure		
Size	Catalog Number	List Price $	Catalog Number	Max CPT VA	List Price $	Catalog Number	List Price $	Catalog Number	Max CPT VA	List Price $	Catalog Number	List Price $	Catalog Number	Max CPT VA	List Price $
00–1¾	49EC14IB201208R		49EC14IB201208R	200		49EB22EW131306R		49EB22EW131306R			49EB22E0131306R		49EB22E0131306R		
2, 2½	49EC14IB201208R		49EC14IB201208R	200		49EB22GW161406R		49EB22GW161406R			49EB22G0161406R		49EB22G0161406R		
3, 3½	49EC14JB251409R		49EC14JB251409R	250		49EB22IW261808R		49EB22JW302410R			49EB22I0261808R		49EB22J0302410R		
4	49EC14JB251409R		49EC14JB251409R	300		49EB22JW302410R		49EB22JW302410R			49EB22J0302410R		49EB22J0302410R		

Two-Speed Two-Winding Starters Class 30

	NEMA 1					NEMA 4/4X Stainless① Watertight, Dust-tight, Corrosion Resistant③⑥					NEMA 12/3/3R① Industrial Use, Weatherproof③⑤				
	Without CPT		With CPT (Extra Wide)			Without CPT		With CPT (Extra Wide)			Without CPT		With CPT (Extra Wide)		
	Model C Enclosure		Model C Enclosure			Model B Enclosure		Model B Enclosure			Model B Enclosure		Model B Enclosure		
Size	Catalog Number	List Price $	Catalog Number	Max CPT VA	List Price $	Catalog Number	List Price $	Catalog Number	Max CPT VA	List Price $	Catalog Number	List Price $	Catalog Number	Max CPT VA	List Price $
0–1¾	49EC14IB201208R②		49EC14JB251409R②	200		49EB30EW131306R		49EB30GW161808R			49EB30E0131306R		49EB30G0161808R		
2, 2½	49EC14IB201208R②		49EC14JB251409R②	200		49EB30GW161406R		49EB30GW161808R			49EB30G0161406R		49EB30G0161808R		
3, 3½	49EC14JB251409R②		49EB22JB302410R③	300		49EB30IW261808R		49EB22JW302410R			49EB30I0261808R		49EB22J0302410R		
4	49EC14JB251409R②		49EB22JB302410R③	300		49EB22JW302410R		49EB22JW302410R			49EB22J0302410R		49EB22J0302410R		

Two-Speed One-Winding Starters Class 30

	NEMA 1 General Purpose (Clamshell)②④					NEMA 4/4X Stainless① Watertight, Dust-tight, Corrosion Resistant③⑥					NEMA 12/3/3R① Industrial Use, Weatherproof③⑤				
	Without CPT		With CPT (Extra Wide)			Without CPT		With CPT (Extra Wide)			Without CPT		With CPT (Extra Wide)		
	Model C Enclosure		Model C Enclosure			Model B Enclosure		Model B Enclosure			Model B Enclosure		Model B Enclosure		
Size	Catalog Number	List Price $	Catalog Number	Max CPT VA	List Price $	Catalog Number	List Price $	Catalog Number	Max CPT VA	List Price $	Catalog Number	List Price $	Catalog Number	Max CPT VA	List Price $
0–1¾	49EC14IB201208R②		49EC14JB251409R②	200		49EB30EW131306R		49EB30GW161808R			49EB30E0131306R		49EB30G0161808R		
2, 2½	49EB30GB161808R③		49EB22JB302410R③	300		49EB30GW161808R		49EB22IW261808R			49EB30G0161808R		49EB22I0261808R		
3, 3½	49EB30IB192208R③		49EB22JB302410R③	300		49EB22JW302410R		49EB22JW302410R			49EB22J0302410R		49EB22J0302410R		
4	49EB22JB302410R③		49EB22JB302410R③	300		49EB22JW302410R		49EB22JW302410R			49EB22J0302410R		49EB22J0302410R		

Note: Dimensions...See appropriate Product Class Outline Drawing beginning on page 17-159.

① For conduit hubs and conversion instructions, see page 17-112.

② Clamshell enclosure suitable for one operating device and two pilot lights. See Field Mods page 17-106.

③ Hinged cover enclosures, except for **49EB14E0130806R**, are suitable for one or more class 52 operating devices and one or more class 52 pilot lights. See Field Mods page 9/100.

④ Install NEMA 1 hole plug cat. no. **3SB1902-0AR** (included) when the cover OL reset is not needed.

⑤ Install NEMA 12 hole plug cat. no. 52ABH6 (not included) when the cover OL reset is not needed.

⑥ Install NEMA 4X stainless steel hole plug cat. no. **52ABHS** (not included) when the cover OL reset is not needed.

Lighting Contactors Class LC and LE

Contactor	Type 1 [1]			Type 4/4X Stainless Steel [2]			Type 3/3R/12 [3]		
	Without CPT	With CPT	Max.	Without CPT	With CPT	Max.	Without CPT	With CPT	Max.
	Catalog Number	Catalog Number	CPT VA	Catalog Number	Catalog Number	CPT VA	Catalog Number	Catalog Number	CPT VA
LC 30A 2-12P	**49EC14GB140807R**	**49EC14IB201208R**	200	**49EB22GW161406R**	**49EB30GW161808**		**49EB22G0161406R**	**49EB30G0B161808**	
LE 20, 30A 3-4P	**49EC14EB110705R**	**49EC14IB201208R**	200	**49EB22GW161406R**	**49EB22GW161406R**		**49EB22G0161406R**	**49EB22G0161406R**	
LE 30A 6-9P	**49EC14IB201208R**	**49EC14IB201208R**	200	**49ECLXXW161406**	**49EB14JW261408R**		**49ECLXX0161406**	**49EB14J0261408R**	
LE 30A 12P	**49EC14IB201208R**	**49EC14JB251409R**	250	**49ECLXXW161406**	**49EB14JW261408R**		**49ECLXX0161406**	**49EB14J0261408R**	
LE 60A 3P	**49EC14GB140807R**	**49EC14IB201208R**	200	**49EB22GW161406R**	**49EB22GW161406R**		**49EB22G0161406R**	**49EB22G0161406R**	
LE 60A 6-9P	**49EC14IB201208R**	**49EC14IB201208R**	200	**49ECLXXW161406**	**49EB14JW261408R**		**49ECLXX0161406**	**49EB14J0261408R**	
LE 60A 12P	**49EC14IB201208R**	**49EC14IB201209R**	250	**49ECLXXW161406**	**49EB14JW261408R**		**49ECLXX0161406**	**49EB14J0261408R**	
LE 100A 3P	**49EC14IB201208R**	**49EC14IB201208R**	200	**49ECLXXW161406**	**49EB14JW261408R**		**49ECLXX0161406**	**49EB14J0261408R**	

Lighting & Heating Contactors Class CLM

		NEMA 1 General Purpose (Clamshell)②④					NEMA 4/4X Stainless① Watertight, Corrosion Resistant③⑥					NEMA 12/3/3R① Industrial Use③⑤				
		Without CPT		With CPT (Extra Wide)			Without CPT		With CPT (Extra Wide)			Without CPT		With CPT (Extra Wide)		
		Model C/B Enclosure		Model C/B Enclosure			Model B Enclosure		Model B Enclosure			Model B Enclosure		Model B Enclosure		
Size	Pole	Catalog Number	List Price $	Catalog Number	Max CPT	List Price $	Catalog Number	List Price $	Catalog Number	Max CPT	List Price $	Catalog Number	List Price $	Catalog Number	Max CPT	List Price $
20A	2-12	**49EC14GB140807R**		**49EC14IB201208R**	200VA		**49EB22GW161406R**		**49EB22GW161406R**	—		**49EB22G0161406R**		**49EB22G0161406R**	—	
30A	2-5	**49EC14EB110705R**		**49EC14IB201208R**	200VA		**49EB22GW161406R**		**49EB22GW161406R**	—		**49EB22G0161406R**		**49EB22G0161406R**	—	
30A	6-12	**49EB30GB161808R**		**49EB30GB161808R**	200VA		**49ECLXXW161406**		**49EB30GW161808R**	—		**49ECLXX0161406**		**49EB30G0161808R**	—	
60A	2-5	**49EC14GB140807R**		**49EC14IB201208R**	200VA		—	—	—	—	—	—	—	—	—	—
60A	6-12	**49EB30IB192208R**		**49EB30IB192208R**	250VA		—	—	—	—	—	—	—	—	—	—
100A	2-5	**49EC14IB201208R**		**49EC14IB201208R**	200VA		—	—	—	—	—	—	—	—	—	—

Note: Dimensions...See appropriate Product Class Outline Drawing on page 17-172.

① For conduit hubs and conversion instructions, see page 17-112.

② Clamshell enclosure suitable for one operating device and two pilot lights. See Field Mods page 17-106.

③ Hinged cover enclosure suitable for one or more class 52 operating devices and one or more class 52 pilot lights. See Field Mods page 17-106.

④ Install NEMA 1 hole plug cat. no. **3SB1902-0AR** (included) when the cover OL reset is not needed.

⑤ Install NEMA 12 hole plug cat. no. 52ABH6 (not included) when the cover OL reset is not needed.

⑥ Install NEMA 4X stainless steel hole plug cat. no. **52ABHS** (not included) when the cover OL reset is not needed.

Features

- Manufactured with a cold forming "TOX" process
- 100kA short circuit rating when protected with class R fuses to 600V or MCP to 480V and when installing listed components from the instruction guide
- Enclosure types available, Nema 1, 12, 3/3R and painted NEMA 4. Nema 12 field convertible to 3/3R/4 with the appropriate conduit hub and drain hole
- Pre-Drilled mounting panels
- Heavy duty quarter turns
- Industrial type disconnect handle

Disconnect Type Enclosure Kit

- Used to assemble both non-fusible and fusible combination starters
- Accommodates Class 14 full voltage non-reversing (FVNR) NEMA starters 00 – 4 including Siemens exclusive half sizes
- Handle mechanism, power wire, mounting panel, reset assembly, and instruction guide included. Hardware for panel mounted devices and disconnect switch are not included

MCP Type Enclosure Kit

- Used to assemble combination starters with circuit breakers
- Accommodates Class 14 full voltage non-reversing (FVRN) NEMA starters 00 – 4 including Siemens exclusive half sizes
- Handle mechanism, power wire, mounting panel, reset assembly and instruction guide included. Circuit breaker not included however, mounting hardware for the circuit breaker is

How to Select the Required Kits to Assemble a Combination Starter

1. From the catalog, select a class 14 open type starter with the required starter size and overload relay type.
2. Based on the starter size, select the enclosure kit from table 1a for fusible or non-fusible combination starters or select from table 1b for combination starters with an MCP.
3. For a non-fusible combination starter, select the disconnect switch kit from table 2a. For a fusible combination starter, select the appropriate disconnect switch, fuse clip kit, and class R rejection kit from table 2b (for H fusing, class R rejection kit not required). For combination starters with MCP, select the appropriate circuit breaker kit from table 3.

Nomenclature for Combination Enclosure Kits

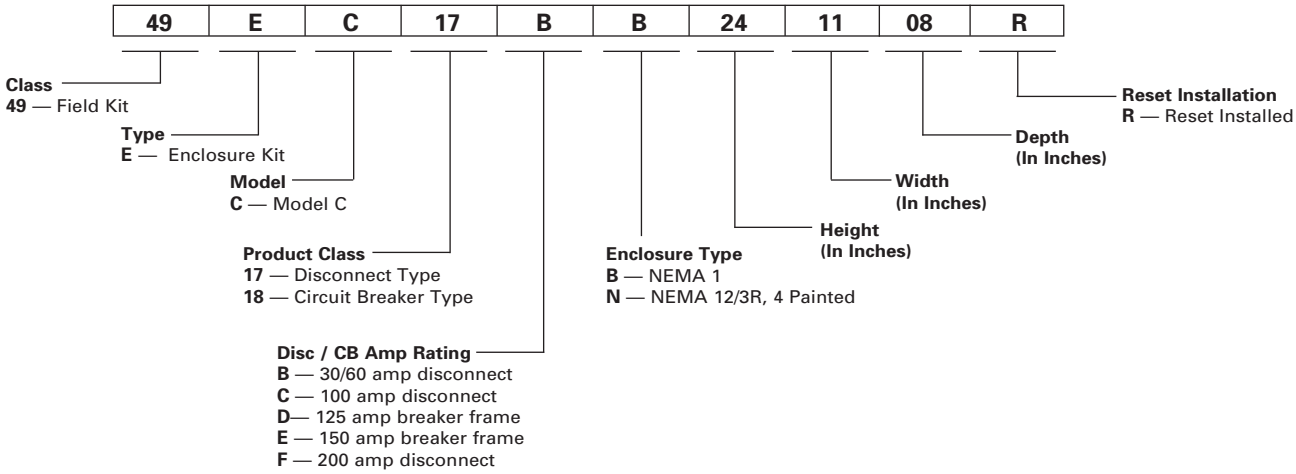

Table 1a - FVNR Combination Starter Kits for use with Disconnect Devices

Starter Size	Disc. Amp Rating	NEMA 1 General Purpose		NEMA 12, 3/3R, 4 Painted ① Industrial Use, Weatherproof, Watertight, Dust-tight		NEMA 4/4X Stainless Steel Watertight, Dust-tight, Corrosion Resistant	
		Catalog Number	List Price $	Catalog Number	List Price $	Catalog Number	List Price $
0 - 2	60	**49EC17BB241108R**		**49EC17BN241108R**		**49EC17BW241108R**	
2 ½ - 3	100	**49EC17CB242008R**		**49EC17CN242008R**		**49EC17CW242008R**	
3 ½ - 4	200	**49EC17FB362408R**		**49EC17FN362408R**		**49EC17FW362408R**	

Table 1b. – FVNR Combination Starter Kits for use with MCP Devices

Starter Size	Max MCP Amps	NEMA 1 General Purpose		NEMA 12, 3/3R, 4 Painted ① Industrial Use, Weatherproof, Watertight, Dust-tight		NEMA 4/4X Stainless Steel Watertight, Dust-tight, Corrosion Resistant	
		Catalog Number	List Price $	Catalog Number	List Price $	Catalog Number	List Price $
0 - 2	50	**49EC18DB241108R**		**49EC18DN241108R**		**49EC18DW241108R**	
2 ½ - 3	125	**49EC18DB242008R**		**49EC18DN242008R**		**49EC18DW242008R**	
3 ½	125	**49EC18DB362408R**		**49EC18DN362408R**		**49EC18DW362408R**	
4	150	**49EC18EB362408R**		**49EC18EN362408R**		**49EC18EW362408R**	

Table 2a – Non-Fusible Disconnect Kits

Disconnect Switch		
Switch Rating	Catalog Number	List Price $
30A	**HNB612**	
60A	**HNB623**	
100A	**HNB623**	
200A	**HNB64**	

Table 2b – Fusible Disconnect Kits

Fuse Clip Ratings	Class	Disconnect Switch		Load Base for Fuse		Rejection Clips for Class R Fusing	
		Catalog Number	List Price $	Catalog Number	List Price $	Catalog Number	List Price $
30A-250V	H	**HFB21**		**HBB21**		**HR21**	
30A-600V	H	**HFB612**		**HBB612**		**HR612**	
60A-250V	H	**HFB22**		**HBB22**		**HR612**	
60A-600V	H	**HFB62**		**HBB62**		**HR62**	
100A-250V	H	**HFB63**		**HBB63**		**HR63**	
100A-600V	H	**HFB63**		**HBB63**		**HR63**	
200A-250V	H	**HFB64**		**HBB64**		**HR64**	
200A-600V	H	**HFB64**		**HBB64**		**HR64**	

Table 3 – Circuit Breaker Kits

Starter Size	MCP Type Used with Solid State Overload Relay			MCP Type Used with Thermal Overload Relay	
	Overload Amp Range	Motor Circuit Interrupter Amps	Circuit Breaker Kit	Motor Circuit Interrupter Amps	Circuit Breaker Kit
0	0.75-3.4	3	**ED63A003**	3	**ED63A003**
	3-12	10	**ED63A010**	10	**ED63A010**
	5.5-22	25	**ED63A025**	25	**ED63A025**
1	0.75-3.4	3	**ED63A003**	3	**ED63A003**
	3-12	10	**ED63A010**	10	**ED63A010**
	5.5-22	25	**ED63A025**	25	**ED63A025**
	10-40	30	**ED63A030**	30	**ED63A030**
1 ¾	10-40	40	**ED63A040**	40	**ED63A040**
2	13-52	50	**ED63A050**	50	**ED63A050**
2 ½	25-100	100	**ED63A100**	100	**ED63A100**
3	25-100	100	**ED63A100**	100	**ED63A100**
3 ½	50-200	125	**ED63A125**	125	**ED63A125**
4	50-200	150	**FXD63A150L**	150	**FXD63A150L**

① For conduit hubs and conversion instructions, see page 17-112.

Ordering Information

- Replace the (*) with a letter from the coil table. Dual voltage coils are wired on high voltage unless specified on order.
- Refer to Class 87 section of catalog for pump panel ratings and other details.
- Handle mechanism, power wire, mounting panel, reset assembly and instruction guide are included with the enclosure kit.

Coil Table

60Hz Voltage	Letter
24	J
120	F
110–120/220–240	A①
200–208	D
220–240	G
220–240/440–480	C①
277	L
440–480	H
550–600	E

Pump Panels with Solid-State Overload Relay Class 87

To Field Assemble This Pump Panel:	Order these components: Enclosure Catalog Number	Starter with Solid-State Overload Relay	Disconnect Switch	Fuse Load Base	Class R Rejection Clips	Motor Circuit Interrupter	Enclosure List Price $
87DUB6F*	**49EB87GF242008**	14DUB32A*	HFB612	HBB612	HR612	—	
87DUC6F*	**49EB87GF242008**	14DUC32A*	HFB612	HBB612	HR612	—	
87DUD6F*	**49EB87GF242008**	14DUD32A*	HFB612	HBB612	HR612	—	
87DUD60*	**49EB87GF242008**	14DUD32A*	HFB62	HBB62	HR62	—	
87EUE6F*	**49EB87GF242008**	14EUE32A*	HFB612	HBB612	HR612	—	
87EUE60*	**49EB87GF242008**	14EUE32A*	HFB62	HBB62	HR62	—	
87FUF6F*	**49EB87GF242008**	14FUF32A*	HFB62	HBB62	HR62	—	
87FUF60*	**49EB87GF242008**	14FUF32A*	HFB63	HBB63	HR63	—	
87GUG6F*	**49EB87GF242008**	14GUG32A*	HFB62	HBB62	HR62	—	
87GUG60*	**49EB87GF242008**	14GUG32A*	HFB63	HBB63	HR63	—	
87HUG6F*	**49EB87JF362408**	14HUG32A*	HFB63	HBB63	HR63	—	
87HUG60*	**49EB87JM362408**	14HUG32A*	MCS620R	FCK620	SSRK34	—	
87IUH6F*	**49EB87JM362408**	14IUH32A*	MCS620R	FCK620	SSRK34	—	
87JUH6F*	**49EB87JM362408**	14JUH32A*	MCS620R	FCK620	SSRK34	—	
87DUC6L*	**49EB87GF242008**	14DUC32A*	HFB21	HBB21	HR21	—	
87DUD6L*	**49EB87GF242008**	14DUD32A*	HFB21	HBB21	HR21	—	
87DUE6L*	**49EB87GF242008**	14DUE32A*	HFB21	HBB21	HR21	—	
87DUE6P*	**49EB87GF242008**	14DUE32A*	HFB22	HBB22	HR612	—	
87EUE6L*	**49EB87GF242008**	14EUE32A*	HFB22	HBB22	HR612	—	
87FUF6L*	**49EB87GF242008**	14FUF32A*	HFB22	HBB22	HR612	—	
87FUF6P*	**49EB87GF242008**	14FUF32A*	HFB63	HBB63	HR63	—	
87GUG6L*	**49EB87GF242008**	14GUG32A*	HFB22	HBB22	HR612	—	
87GUG6P*	**49EB87GF242008**	14GUG32A*	HFB63	HBB63	HR63	—	
87HUG6L*	**49EB87JF362408**	14HUG32A*	HFB63	HBB63	HR63	—	
87HUG6P*	**49EB87JM362408**	14HUG32A*	MCS620R	FCK620	SSRK34	—	
87IUH6L*	**49EB87JM362408**	14IUH32A*	MCS620R	FCK620	SSRK34	—	
87JUH6L*	**49EB87JM362408**	14JUH32A*	MCS620R	FCK620	SSRK34	—	
87DUB6M*	**49EB87GB242008**	14DUB32A*	—	—	—	ED63A003	
87DUC6M*	**49EB87GB242008**	14DUC32A*	—	—	—	ED63A010	
87DUD6M*	**49EB87GB242008**	14DUD32A*	—	—	—	ED63A025	
87DUE6M*	**49EB87GB242008**	14DUE32A*	—	—	—	ED63A030	
87EUE6M*	**49EB87GB242008**	14EUE32A*	—	—	—	ED63A040	
87FUF6M*	**49EB87GB242008**	14FUF32A*	—	—	—	ED63A050	
87GUG6M*	**49EB87GB242008**	14GUG32A*	—	—	—	ED63A100	
87HUG6M*	**49EB87IB362408**	14HUG32A*	—	—	—	ED63A100	
87IUH6M*	**49EB87IB362408**	14IUH32A*	—	—	—	ED63A125	
87JUH6M*	**49EB87JB362408**	14JUH32A*	—	—	—	FXD63A150L	

① Dual voltage coils not available in size 5-8 starters.

Ordering Information

- Replace the (*) with a letter from the coil table. Dual voltage coils are wired on high voltage unless specified on order.
- Refer to Class 87 section of catalog for pump panel ratings and other details.
- Handle mechanism, power wire, mounting panel, reset assembly and instruction guide are included with the enclosure kit.

Coil Table

60Hz Voltage	Letter
24	J
120	F
110–120/220–240	A①
200–208	D
220–240	G
220–240/440–480	C①
277	L
440–480	H
550–600	E

Pump Panels with Bimetal Overload Relay Class 87

To Field Assemble This Pump Panel:	Order these components: Enclosure Catalog Number	Starter with Bimetal Overload Relay	Disconnect Switch	Fuse Load Base	Class R Rejection Clips	Motor Circuit Interrupter	Enclosure List Price $
87DAE6F*	**49EB87GF242008**	14DP32A*81	HFB612	HBB612	HR612	—	
87DAE60*	**49EB87GF242008**	14DP32A*81	HFB62	HBB62	HR62	—	
87EAF6F*	**49EB87GF242008**	14EP32A*81	HFB612	HBB612	HR612	—	
87EAF60*	**49EB87GF242008**	14EP32A*81	HFB62	HBB62	HR62	—	
87FAJ6F*	**49EB87GF242008**	14FP32A*81	HFB62	HBB62	HR62	—	
87FAJ60*	**49EB87GF242008**	14FP32A*81	HFB63	HBB63	HR63	—	
87GAK6F*	**49EB87GF242008**	14GP32A*81	HFB62	HBB62	HR62	—	
87GAK60*	**49EB87GF242008**	14GP32A*81	HFB63	HBB63	HR63	—	
87HAN6F*	**49EB87JF362408**	14HP32A*81	HFB63	HBB63	HR63	—	
87HAN60*	**49EB87JM362408**	14HP32A*81	MCS620R	FCK620	SSRK34	—	
87IAP6F*	**49EB87JM362408**	14IP32A*81	MCS620R	FCK620	SSRK34	—	
87JAR6F*	**49EB87JM362408**	14JG32A*81	MCS620R	FCK620	SSRK34	—	
87DAE6L*	**49EB87GF242008**	14DP32A*81	HFB21	HBB21	HR21	—	
87DAE6P*	**49EB87GF242008**	14DP32A*81	HFB22	HBB22	HR612	—	
87EAG6L*	**49EB87GF242008**	14EP32A*81	HFB22	HBB22	HR612	—	
87FAJ6L*	**49EB87GF242008**	14FP32A*81	HFB22	HBB22	HR612	—	
87FAJ6P*	**49EB87GF242008**	14FP32A*81	HFB63	HBB63	HR63	—	
87GAL6L*	**49EB87GF242008**	14GP32A*81	HFB63	HBB63	HR63	—	
87HAN6L*	**49EB87JF362408**	14HP32A*81	HFB63	HBB63	HR63	—	
87HAN6P*	**49EB87JM362408**	14HP32A*81	MCS620R	FCK620	SSRK34	—	
87IAP6L*	**49EB87JM362408**	14IP32A*81	MCS620R	FCK620	SSRK34	—	
87JAR6L*	**49EB87JM362408**	14JG32A*81	MCS620R	FCK620	SSRK34	—	
87DAA6M*	**49EB87GB242008**	14DP32A*81	—	—	—	ED63A003	
87DAB6M*	**49EB87GB242008**	14DP32A*81	—	—	—	ED63A010	
87DAD6M*	**49EB87GB242008**	14DP32A*81	—	—	—	ED63A025	
87DAE6M*	**49EB87GB242008**	14DP32A*81	—	—	—	ED63A030	
87EAF6M*	**49EB87GB242008**	14EP32A*81	—	—	—	ED63A040	
87EAG6M*	**49EB87GB242008**	14EP32A*81	—	—	—	ED63A050	
87FAH6M*	**49EB87GB242008**	14FP32A*81	—	—	—	ED63A040	
87FAJ6M*	**49EB87GB242008**	14FP32A*81	—	—	—	ED63A050	
87GAK6M*	**49EB87GB242008**	14GP32A*81	—	—	—	ED63A050	
87GAL6M*	**49EB87GB242008**	14GP32A*81	—	—	—	ED63A100	
87HAN6M*	**49EB87IB362408**	14HP32A*81	—	—	—	ED63A100	
87IAP6M*	**49EB87IB362408**	14IP32A*81	—	—	—	ED63A125	
87JAR6M*	**49EB87JB362408**	14JG32A*81	—	—	—	FXD63A150L	

① Dual voltage coils not available in size 5-8 starters.
② For NO/NC SPDT contact on overload, replace "81" with "91". "81" will give a NC contact.

Ordering Information

► All modifications will consist of Siemens standard components as available. Standard equipment dimensions and enclosure construction may not apply when certain modifications and special features are added.

Pilot Devices

Description	Modification	Class	Enclosure Type	Modification Code	List Price $
Push Buttons	Start, Stop	14, 17, 18, 36, 37, 40, 83, 84, CLM, CM, LC, LE	All	**A1**	⑤
	Forward, Reverse, Stop	22, 25, 26, 43	All	**A2**	
	High, Low , Stop	30, 32	All		
	E-Stop	14, 17, 18, 22, 25, 26, 30, 32, 36, 37, 40, 43	All	**ES**	
Selector Switches	Hand-Off-Auto	14, 17, 18, 36, 37, 40, 83, 84, LC, LE	All	**A3**	⑤
		CM, CLM	All	**A3**	
	For 24 volt HOA control, 20 Amp contactor only	CM, CLM	1	**EM**	
	Off-On	14, 17,18, 22, 25, 26, 30, 32, 36, 37, 40, 43, 83, 84, CLM, CM, LC, LE	All	**A4**	⑤
	Auto-Off	14, 17, 18, 40, 83, 84, CM, CLM, LC, LE	All	**A6**	⑤
	Forward-Off-Reverse	22, 25, 26, 43	All	**A5**	
	High-Off-Low	30, 32	All		
	Hand-Off-Auto (Keyed)	14, 17, 18, 36, 37, 40, 83, 84, LC, LE, CLM, CM	All	**A9**	⑤
	Auto-Off-Low-High	30, 32	All	**A0**	

Pilot Lights

Class	Enclosure Type	Lens Color →	Red	Green	Red	Green	Red	Green	Amber	White	Red Push-To-Test	Green Push-To-Test	Green Push-To-Test	LED Bulb Upgrade
		Legend→	On For/Rev Low/High	On For/Rev Low/High	Run	Run	Off	Off	OL Tripped	Control Power On	On For/Rev Low/High	On For/Rev Low/High	Off	
		Mod Code →	FA	FB	FC	FD	FJ	FK	FL④	FW	FS	FT	FU	FE①
14, 40, 17, 18, 36, 37, 87, 88, LC, LE, CLM, CM	All													
22, 25, 26, 30, 32, 43, 83, 84	All				⑧	⑧								

Coil Options

Class 14, 17, 18, 22, 25, 26, 30, 32, 40, 43, 83⑤, 84⑥, 87, 88					
			Controller Size — List Price $		
Volts 60 HZ	Volts 50 HZ	Coil Letter Change	00–2½	3, 3½	4
24	24	**J**			
120	110	**F**			
110–120/220–240	110/190–220	**A**			
200–208	—	**D**			
220–240	190–220	**G**			
277	240	**L**			
220–240/440–480	190–220/380–440	**C**			
440–480	380–440	**H**			
575–600	550	**E**			
DC Coil③	24V	**S**⑦			
	48V	**U**			
	125V	**V**	.		
	250V	**W**			

AC (50–60 HZ) or DC	Coil Letter Change	Controller Size 4 (Vacuum Only) Size 5 & 6 (ALL)
23–26V	**J**	
42–48V	**U**	
110–127V	**F**	
200–220V	**D**	
220–240V	**G**	
240–277V	**L**	
380–420V	**K**	
440–480V	**H**	
575–600V	**E**	

① Pilot lights are transformer type as standard. For LED type bulbs, order suffix FE in addition to the standard device suffix(es). For example, to order red "ON" and green "OFF" pilot lights with LED bulbs, order FA, FK and FE.

② DC coils include 1 NC, late break aux. contact. This aux. contact takes up one side of the starter (00–4 only).

③ Price x 2 for Classes 22, 25, 26, 30, 32, 43, 83, 84.

④ Bimetal OL - Size 00 - 2 1/2 available. Solid-state OL - Size 00 - 4, 7 & 8 available.

⑤ For Class 83, 84 two devices are provided. Price x 2.

⑥ For Class 83, 84 standard enclosure (92) alternating relay available in 24V or 120V control only.

⑦ S coil is not available for size 4 contactors or starters.

⑧ Class 83 and 84 only.

Ordering Information

► Replace (*) with letter from Transformer Table.

Transformer Table

Primary Volts	Secondary Volts	Letter
120	24	B
208	24	S
208	120	T
240	24	J
240	120	F
277	24	N
277	120	P
380	110	U
415	100	W
480	240	R
480/240	24	D
480/240	120	A
600	24	E
600	120	C

Control Power Transformers②

Description	Modification Code	Product Class	Enclosure Type	20–60	100	—	200	300–400	—	—
				0–2½	3	3½, 4	5	6	7	8
Standard Capacity① with 1-Secondary Fuse	B*	14, 17, 18, 22, 25, 26, 30, 32, 40, 43, 83③, 84③, 87, LE	1, 3, 4, 12		—	—	—	—	—	—
			7 & 9		—	—	—	—	—	—
Standard Capacity with 2-Primary and 1-Secondary Fuse	D*	14, 17, 18, 22, 25, 26, 30, 32, 40, 43, 83③, 84③, 87, LC, LE, CLM, CM	1, 3, 4, 12							
			7 & 9							
100VA Extra Capacity with 2-Primary and 1-Secondary Fuse	C*	14, 17, 18, 22, 25, 26, 30, 32, 40, 43, 83③, 84③, 87, LC, LE, CLM, CM	1, 3, 4, 12							
			7 & 9							
		36, 37, 88	All						—	—
150VA Extra Capacity with 2-Primary and 1-Secondary Fuse	C*1	14, 17, 18, 22, 25, 26, 30, 32, 40, 43, 83③, 84③, 87, LC, LE, CLM, CM	1, 3, 4, 12							
		36, 37, 88	All						—	—

← Lighting & Heating Ratings (Amps)
← Motor Controller Size

Factory Assembled Fuse Clips—Class 25, 32, 84④

Fuse Clip Amps	Volts	Modification Code	List Price $
30	250	10	
30	600	11	
60	250	12	
60	600	13	
100	250	14	
100	600	15	
200	250	16	
200	600	17	
400	250	18	
400	600	19	
600	250	20	
600	600	21	
800	600	23	
1200	600	24	
1600	600	25	

Note: Factory will furnish the same voltage coils as transformer secondary voltage (except with class 36,37).

① The standard control transformer supplied for starter sizes 0 through 2½ will be rated 45VA and have the appropriate secondary fuse. Primary fuses will not be supplied as standard. For primary fuse option select appropriate suffix from table.

② For 24VAC control a minimum of 100VA CPT required.
③ Price x 2 Class 83 and 84.
④ Class 84 Duplex Controllers require two fusible disconnects thus multiply the price adder by two.

Additional Auxiliary Contacts

Class	NO Contacts	NC Contacts	Modication Code	Controller Size — List Price $			
				00–1¾	2–4	5–6	7–8
14, 17, 18, 40, 83③, 84③	—	1	G01			—	—
	—	2	G02				—
	1	—	G10			—	—
	1	1	G11				
	1	2	G12			—	—
	2	—	G20				—
	2	1	G21			—	—
	2	2	G22				—
	2	3	G23			—	—
	3	1	G31				—
	3	2	G32			—	—
	3	3	G33		—	—	—
	4	—	G40				—
	4	1	G41			—	—
	4	2	G42		—	—	—
	4	4	G44		—	—	—
	5	—	G50			—	—
	5	1	G51		—	—	—
	5	3	G53		—	—	—
	6	—	G60		—	—	—
	6	2	G62		—	—	—
	7	1	G71		—	—	—
	8	—	G80		—	—	—
22, 25, 26, 43 & 30, 32 (2-winding)	—	2	G02①			—	—
	2	—	G20①			—	—
	2	2	G22①				—
	4	0	G40①				—
	4	4	G44①			—	—
	6	2	G62①			—	—
	8	0	G80①			—	—
30, 32 (1-winding)	0	2	G02①	—		—	—
	2	—	G20①	—		—	—
	2	2	G22①			—	—
	4	—	G40①			—	—
	4	4	G44①	—		—	—
	6	2	G62①	—		—	—
	8	—	G80①	—		—	—
LE, CLM, CM	1	1	G11		—	—	—
LC	0	1	G01				
	1	0	G10				
	1	1	G11				
	0	2	G02				
	2	0	G20				
LE, CLM, CM	0	2	G02①		—	—	—
	2	0	G20①		—	—	—
	2	2	G22①		—	—	—

Description	Class	Modification Code	Controller Size - Price Deduction $					
			0, 1	1¾ - 2½	3	3½, 4	5, 6	7, 8
Omit Overload Relay and Reset Button	17, 18, 25, 26	EX1						

① Auxiliary contacts will be added evenly across contactors. (i.e. Class 22, G02 suffix will add 2 NC contacts (one per contactor).

② Double the price addition for Class 30 and 32.

③ For class 83 and 84 contacts will be added to both starters. Price x 2.

Control Options

Description	Class	Enclosure Type	Modification Code	List Price $
Lighting Control Modules (does not include pilot devices)	CLM 20 Amp only	All	**2W (2-wire control module)** **3W (3-wire control module)** **3WS (Start/Stop control module)**	
Surge Suppression for 120V AC Coil②	14, 17, 18, 22, 25, 26, 30, 32, 36, 37, 83, 84, 87, 88	All	**SS**	
Disconnect Switch Interlock 2 NO/2 NC DPDT	17, 25, 32, 37, 84, CM, LE	1, 3, 4, 4X, 12	**GY**	
Motor Circuit Protector Interlock NO/NC SPDT	18, 26, 32, 37, 84, CM, LE	All	**GY**	
Lightning Arrestor	All	All	**L**	
Circuit Breaker Shunt Trip	18, 26, 32, 37, 84, 87, 88, CM, LE	All	**L6**	
Circuit Breaker Undervoltage Trip	18, 26, 32, 37, 84, 87, 88, CM, LE	All	**L7**	
Circuit Breaker Alarm Switch Trip	18, 26, 32, 37, 84, 87, 88, CM, LE	All	**L8**	
Ground Lug – 1 Conductor	All	All	**L10**	
Control Circuit Fuse and Holder (Transformer Primary Fusing)	All	All	**F1 (1 fuse)** **F2 (2 fuses)**	
Control Circuit Circuit Breaker Internally Operated	All	All	**F4**	
Space Heater (120V separate control)	All	All	**SH**	
Space Heater with Thermostat (120V separate control)	All	All	**ST**	
Surge Capacitor	87, 88	All	**SC**	
Alarm Package (includes horn, light, relay & push-button)	83, 84, 87, 88	All	**M7**	
Backspin Protection	87, 88	All	**T5**	
Minimum Run Timer 0.2 sec. - 3 mins.	87, 88	All	**T6**	
Blown Control Fuse Indicator Light	17, 25, 32, 37, 84, 87, 88, CM, LC, LE	All	**L11**	
Single Phase 120VAC Combination Starter	17, 18, 25, 26	All	**SP1**	
Single Phase 240VAC Combination Starter	17, 18, 25, 26	All	**SP2**	

Reversing Options

Description	Class	Modification Code	Controller Size —List Price $								
			0	1	1¾	2	2½	3	3½	4	5
Reversing in one speed only 2 speed 1 winding	30, 32	**R6**									—
Reversing in one speed only 2 speed 2 winding		**R7**									—
Reversing in both speeds 2 speed 1 winding		**R8**									—
Reversing in both speeds 2 speed 2 winding		**R9**									—
Reversing for Reduced Voltage	36, 37	**R**									

Motor Management with PROFIBUS DP Communications③

Description	Class	Enclosure Type	Modification Code	List Price
SIMOCODE pro C With 0.3-3A Current Module	14,17,18,22,25,26	All	**MC1**	
SIMOCODE pro C With 2.4-25A Current Module			**MC2**	
SIMOCODE pro C With 10-100A Current Module			**MC3**	
SIMOCODE pro C With 20-200A Current Module			**MC4**	
SIMOCODE pro C With 63-630A Current Module			**MC5**	
SIMOCODE pro V With 0.3-3A Current/Voltage Module			**MV1**	
SIMOCODE pro V With 2.4-25A Current/Voltage Module			**MV2**	
SIMOCODE pro V With 10-100A Current/Voltage Module			**MV3**	
SIMOCODE pro V With 20-200A Current/Voltage Module			**MV4**	
SIMOCODE pro V With 63-630A Current/Voltage Module			**MV5**	
Factory Parameterization of SIMOCODE			**MM0**	

Electrically Held to Mechanically Held Conversion Modules	Class	Enclosure type	Contactor Size (Amp)	Description	Modification Code
	LC	**Open, 1, 12, 4/4X**	**30**	**2-wire, 24VAC** **2-wire, 110-120VAC** **2-wire, 200-277VAC** **3-wire, 24VAC** **3-wire, 110-120VAC** **3-wire, 200-277VAC**	**2W1** **2W2** **2W3** **3W1** **3W2** **3W3**

① Supplied as NEMA 12, field convertible to NEMA 3R.
② Surge Suppression for NEMA sizes 5 – 8 are supplied internal with the coil.
③ A CPT must also be ordered to power the motor management device. Motor management may be ordered with other product classes as specials.

Control Relays

Description		Class	Enclosure Type	Modification Code	List Price $
Control Relay 4-Poles Max	4 NO	All	1, 3, 4, 7, 9, 12	**R40**	
	2 NO/2 NC			**R22**	
	4 NC			**R04**	
Under/Over Voltage, Phase Failure, Phase Sequence, Phase Unbalance		All	All	**R1**	
Ground Fault Relay			All	**R5**	
Electronic On Delay Relay (.15s–100h) 24V/120V			1, 3, 4, 7, 9, 12	**T1**	
Electronic On Delay Relay (.15s–100h) 24V/240V①				**T2**	
Electronic Off Delay Relay (.15s–100s) 120V				**T3**	
Electronic Off Delay Relay (.15s–100s) 240V①				**T4**	
24 hour time clock		LC, LE, CLM, CM	All	**T7**	
24 hour time clock with day omission				**T8**	
7 day time clock				**T9**	
Compelling Relay		30, 32	1, 4, 12	**A6**	
Acceleration Control				**A7**	
Deceleration Control				**A8**	

Meters—Mounted on Enclosure

Description	Class	Enclosure Type	Modification Code	List② Price $
Ammeter (includes a C.T. if necessary)	14, 17, 18, 22, 25, 26, 30⑤, 32⑤, 36, 37, 40, 43, 83, 84, 87, 88	1, 3, 4, 4X, 12	**M1**	
Ammeter and Switch (3-Phase with 3 C.T.'s)		1, 12	**M2**	
Voltmeter		1, 3, 4, 4X, 12	**M3**	
Voltmeter and Switch (3-Phase)		1, 12	**M4**	
Elapsed Time Meter③		1, 3, 4, 4X, 12	**M5**	

Function Identification Plates

Description	Class	Modification Code	List Price $
Function identification plate, with marking as specified	All	**N1**	

Terminal Blocks

Description	Class	Modification Code	List Price $
3 Point Terminal	All	**TC3④**	
6 Point Terminal		**TC6④**	
9 Point Terminal		**TC9④**	

Special Ratings

Description	Class	Modification Code	List Price $
Service Entrance Rating	17, 18, 25, 26, 32, 37, 84	**N3**	

Drawings

Description	Class	Catalog Number	List Price $
Approval/submittal and as-built drawings for factory modified product may be ordered. The drawing set includes an enclosure outline, a panel layout and a schematic. When entering the order, use the line item notes to reference a product and modifications or an existing order that the drawings are to be engineered for. Specify the contact information and an email address in the ship to address field. Attach any reference drawings to the order or forward to National Customer Support. Once completed, the drawing set will emailed.	All	**CONTROLDRAWING**	

① Not available on Class 36, 37.
② Price x 2 Class 83 and 84.
③ ETM available with 120V coil only.
④ For terminal point more than 9 terminals use additional suffixes. Max 3 suffixes can be selected.
⑤ Class 30 and 32 can be modified with only an elapsed time meter. No other meters apply to class 30 or 32.

Overload Relay Heater Tables

Selection of Heater Elements for Overload Relays

General

Use only when motor full load current is not known. Motor amps will vary depending on the type and manufacturer of the motor. These average values, for motors with service factor of 1.15, are to be used only as a guide. The formulas at the bottom of the page may be used to obtain approximate amps for other motors.
Note: RPM shown for 60 cycle motors. For 50 cycle motors, multiply RPM by .83.

CAUTION: Actual motor amps may be higher or lower than the values listed below for a particular motor. For more reliable motor protection, select heater elements by using the full load motor nameplate amps.

Single Phase motor full load amps of the same horsepower, voltage and speed vary over wide ranges. The following table conforms with table 430.148 of the NEC.

1-Phase

Hp	Full Load Current (60Hz) 115 Volts	230 Volts
⅛	4.4	2.2
¼	5.8	2.9
⅓	7.2	3.6
½	9.8	4.9
¾	13.8	6.9
1	16	8
1 ½	20	10
2	24	12
3	34	17
5	56	28
7 ½	80	40
10	100	50

3-Phase

Hp	Syn Speed RPM	Full Load Current (60Hz) 200 Volts	230 Volts	460 Volts	575 Volts	50 Hz 380 Volts
¼	1800	1.09	0.95	0.48	0.38	0.55
	1200	1.61	1.40	0.70	0.56	0.81
	900	1.84	1.60	0.80	0.64	0.93
⅓	1800	1.37	1.19	0.60	0.48	0.64
	1200	1.83	1.59	0.80	0.64	0.92
	900	2.07	1.80	0.90	0.72	1.04
½	1800	1.98	1.72	0.86	0.69	0.99
	1200	2.47	2.15	1.08	0.86	1.24
	900	2.74	2.38	1.19	0.95	1.38
¾	1800	2.83	2.46	1.23	0.98	1.42
	1200	3.36	2.82	1.46	1.17	—
	900	3.75	3.26	1.63	1.30	1.88
1	3600	3.22	2.80	1.40	1.12	1.70
	1800	4.09	3.56	1.78	1.42	2.06
	1200	4.32	3.76	1.88	1.50	2.28
	900	4.95	4.30	2.15	1.72	2.60
1½	3600	5.01	4.36	2.18	1.74	2.69
	1800	5.59	4.86	2.43	1.94	2.94
	1200	6.07	5.28	2.64	2.11	3.20
	900	6.44	5.60	2.80	2.24	3.39
2	3600	6.44	5.60	2.80	2.24	3.39
	1800	7.36	6.40	3.20	2.56	3.84
	1200	7.87	6.84	3.42	2.74	4.14
	900	9.09	7.90	3.95	3.16	4.77
3	3600	9.59	8.34	4.17	3.34	5.02
	1800	10.8	9.40	4.70	3.76	5.70
	1200	11.7	10.2	5.12	4.10	6.20
	900	13.1	11.4	5.70	4.55	6.80
5	3600	15.5	13.5	5.76	5.41	8.20
	1800	16.6	14.4	7.21	5.78	8.74
	1200	18.2	15.8	7.91	6.32	9.59
	900	18.3	15.9	7.92	6.33	9.60
7½	3600	22.4	19.5	9.79	7.81	11.50
	1800	24.7	21.5	10.7	8.55	13.00
	1200	25.1	21.8	10.9	8.70	13.20
	900	26.5	23.0	11.5	9.19	13.90
10	3600	29.2	25.4	12.7	10.1	15.40
	1800	30.8	25.8	13.4	10.7	16.30
	1200	32.2	28.0	14.0	11.2	16.90
	900	35.1	30.5	15.2	12.2	18.50
15	3600	41.9	36.4	18.2	14.5	22.00
	1800	45.1	39.2	19.6	15.7	23.70
	1200	47.6	41.4	20.7	16.5	25.00
	900	51.2	44.5	22.2	17.8	26.90
20	3600	58.0	50.4	25.2	20.1	30.50
	1800	58.9	51.2	25.6	20.5	31.00
	1200	60.7	52.8	26.4	21.1	31.90
	900	63.1	54.9	27.4	21.9	33.20

3-Phase

Hp	Syn Speed RPM	Full Load Current (60Hz) 200 Volts	230 Volts	460 Volts	575 Volts	50 Hz 380 Volts
25	3600	69.9	60.8	30.4	24.3	36.80
	1800	74.5	64.8	32.4	25.9	39.20
	1200	75.4	65.6	32.8	26.2	39.60
	900	77.4	67.3	33.7	27.0	40.70
30	3600	84.8	73.7	36.8	29.4	—
	1800	86.9	75.6	37.8	30.2	45.70
	1200	90.6	78.8	39.4	31.5	47.60
	900	94.1	81.8	40.9	32.7	49.50
40	3600	111	96.4	48.2	38.5	—
	1800	116	101	50.4	40.3	61.00
	1200	117	102	50.6	40.4	61.20
	900	121	105	52.2	41.7	63.20
50	3600	138	120	60.1	48.2	—
	1800	143	124	62.2	49.7	75.20
	1200	145	126	63.0	50.4	76.20
	900	150	130	65.0	52.0	78.50
60	3600	164	143	71.7	57.3	—
	1800	171	149	74.5	59.4	90.00
	1200	173	150	75.0	60.0	91.10
	900	177	154	77.0	61.5	93.10
75	3600	206	179	89.6	71.7	—
	1800	210	183	91.6	73.2	111.00
	1200	212	184	92.0	73.5	112.00
	900	222	193	96.5	77.5	117.00
100	3600	266	231	115	92.2	—
	1800	271	236	118	94.8	144.00
	1200	275	239	120	95.6	145.00
	900	290	252	126	101	153.00
125	3600	—	292	146	116	—
	1800	—	293	147	117	177.00
	1200	—	298	149	119	180.00
	900	—	305	153	122	186.00
150	3600	—	343	171	137	—
	1800	—	348	174	139	210.00
	1200	—	350	174	139	210.00
	900	—	365	183	146	211.00
200	3600	—	458	229	184	—
	1800	—	452	226	181	274.00
	1200	—	460	230	184	276.00
	900	—	482	241	193	279.00
250	3600	—	559	279	223	—
	1800	—	568	284	227	343.00
	1200	—	573	287	229	345.00
	900	—	600	300	240	347.00
300	1800	—	278	339	271	392.00
	1200	—	684	342	274	395.00
400	1800	—	896	448	358	—

Formula—Approximate Full Load Amps for Other Motors

208 Volt Full Load Amp ≈ 230 Volt current × 110%
2-Phase FLA ≈ 0.866 × the 3-Phase FLA
2-Phase, 3-wire current in common wire ≈ 1.41 × that in the other 2 lines

25Hz 1500 RPM, amps ≈ amps of 60Hz, 3600 RPM
25Hz 750 RPM, amps ≈ amps of 60Hz, 1800 RPM
Service factor 1.0 ≈ amps × 0.9
50°C–55°C motor ≈ amps × 0.9

Overload Relay Heater Tables

Selection of Heater Elements for Overload Relays

General

To Select Heater Catalog Number Use

- Product Class
- Controller Size
- Motor Amp
- Phase

Catalog No 14 C P 3 2 B C 81

- **Phase**
- **Size**
- **Class**

1. Find heater table number below, using the Product Class, Controller Size and Phase. Heater table number is found in the column under the type of overload and phase.

2. Refer to the specified table and use the controller size and motor amps to select the heater catalog number.

a. If motor amps are not known, an approximate value may be found on the previous page. These values should be used with caution and only when motor amps are not available.

Heaters shown on the following pages provide a maximum trip rating of 125% of minimum motor amperes for 40˚C motors (service factor 1.15). For other motors (service factor 1.0), select the next lower listed heater catalog number within the designated table which provides a maximum trip rating of approximately 115%.

Overload relays do not provide protection against short circuits. To ensure proper coordination with short circuit protective device, select heaters from the information packaged with the control device.

Class	Description	Size or Amperage	Controller Size Letter	Heater Table Number			
				Bimetal Standard Trip (Class 20)		Bimetal Quick Trip (Class 10)	
				Compensated E Heaters Green Reset		Compensated K Heaters Green Reset	
				1Ph	3Ph	1Ph	3Ph
SMF	Manual	All	—	See Page 17-128			
	Magnetic						
14, 22	Non-reversing, Reversing	00-4	**B–J**	213	233	313	332
17, 18 25, 26 30, 32① 83, 84 87, 89	Combination Reversing Combination Multi Speed Pump Controllers Motor Control Centers	0-4	**C-J**	—	233	—	332
48	Panel Mounted Overload Relay	25-180A	**D–J**	216	238	316	335

ESP200 starters do not require heater elements.

① **Overload Relay Selection Multi-Speed**
Each speed requires a separate set of overloads. The adjustment range must be selected on the basis of the full-load current for each particular speed.

Heater Elements Class SMF

Ordering Information

1. Determine number of heater elements required from Table A.
2. Determine motor full load current and service factor.
   NOTE: If motor amps are unknown, an approximate value may be found on page 17-126. These values should be used with caution and only when motor amps are not available.
3. If the motor and controller are in the same ambient temperature:
   a. For 1.15 to 1.25 service factor motors use 100% of motor full load current for heater element selection.
   b. For 1.0 service factor motors use 90% of motor full load current for heater element selection.
   c. Heater elements are class 20.
4. If the motor and controller are in different ambient temperatures multiply motor full load current by the multiplier in Table B. Use the resultant full load current for heater element selection.
5. Select proper heater element from table below.
6. All tables are based on the operation of the motor and controller in the same ambient temperature, 40°C (104°F) or less. Always be certain the correct heater element is installed in the starter before operating the motor.

Heater Catalog Number	Motor Full-Load Current (Amps)	List Price $
SMFH01	0.157–0.173	
SMFH02	0.174–0.192	
SMFH03	0.193–0.212	
SMFH04	0.213–0.235	
SMFH05	0.236–0.261	
SMFH06	0.262–0.289	
SMFH07	0.290–0.321	
SMFH08	0.322–0.355	
SMFH09	0.356–0.399	
SMFH10	0.41–0.44	
SMFH11	0.45–0.49	
SMFH12	0.50–0.53	
SMFH13	0.54–0.58	
SMFH14	0.59–0.65	
SMFH15	0.66–0.71	
SMFH16	0.72–0.78	
SMFH17	0.79–0.85	
SMFH18	0.86–0.96	
SMFH19	0.97–1.04	
SMFH20	1.05–1.16	
SMFH21	1.17–1.25	
SMFH22	1.30–1.39	
SMFH23	1.38–1.54	
SMFH24	1.48–1.63	
SMFH25	1.57–1.75	
SMFH26	1.66–1.86	

Heater Catalog Number	Motor Full-Load Current (Amps)	List Price $
SMFH27	1.80–1.99	
SMFH28	1.96–2.15	
SMFH29	2.16–2.38	
SMFH30	2.39–2.75	
SMFH31	2.76–2.84	
SMFH32	2.85–3.06	
SMFH33	3.07–3.45	
SMFH34	3.46–3.70	
SMFH35	3.71–4.07	
SMFH36	4.08–4.32	
SMFH37	4.33–4.90	
SMFH38	4.91–5.35	
SMFH39	5.36–5.85	
SMFH40	5.86–6.41	
SMFH41	6.42–6.79	
SMFH42	6.80–7.57	
SMFH43	7.58–8.15	
SMFH44	8.16–8.98	
SMFH45	8.99–9.67	
SMFH46	9.68–9.95	
SMFH47	9.96–10.8	
SMFH48	10.9–12.1	
SMFH49	12.2–13.1	
SMFH50	13.2–13.9	
SMFH51	14.0–15.0	
SMFH52	15.1–16.0	

Table A
Number of Heater Elements

Device	Number of Heater Elements	Notes
SMFF*1 SMFF*2 SMFF*3 SMFF*4 SMFF*5 SMFF*6	1	All single pole and two pole SMF starters require only 1 Heater Element.
SMFF*22 SMFF*44	2	Duplex Unit. One Heater Element per starter.
SMFF*11 SMFF*22	2	Two Speed Starter. One Heater Element per speed.

Table B—Special Applications
Heater Element Selection

Continuous Duty Motor Service Factor	Ambient Temperature of Motor		
	Same as Controller Ambient	**Constant 10°C (18°F) Higher Than Controller Ambient**	**Constant 10°C (18°F) Lower Than Controller Ambient**
	Full Load Current Multiplier		
1.15 to 1.25	1.0	0.9	1.05
1.0	0.9	0.8	0.95

Table 213 for Class 14, 22 (1-Phase)

Full Load Amps			Heater Catalog No	List Price $
Size 00, 0, 1	Size 1P	Size 2, 2½		
0.37–0.40	—	—	**E3**	
0.41–0.44	0.41–0.44	—	**E4**	
0.45–0.47	0.45–0.47	—	**E5**	
0.48–0.52	0.48–0.52	—	**E6**	
0.53–0.57	0.53–0.57	—	**E7**	
0.58–0.62	0.58–0.62	—	**E8**	
0.63–0.69	0.63–0.69	—	**E9**	
0.70–0.74	0.70–0.74	—	**E11**	
0.75–0.81	0.75–0.81	—	**E12**	
0.82–0.85	0.82–0.85	—	**E13**	
0.86–0.93	0.86–0.93	—	**E14**	
0.94–1.03	0.94–1.03	—	**E16**	
1.04–1.11	1.04–1.11	—	**E17**	
1.12–1.22	1.12–1.22	—	**E18**	
1.23–1.34	1.23–1.34	—	**E23**	
1.35–1.53	1.35–1.53	—	**E24**	
1.54–1.71	1.54–1.71	—	**E26**	
1.72–1.92	1.72–1.92	—	**E27**	
1.93–2.12	1.93–2.12	—	**E28**	
2.13–2.24	2.13–2.24	—	**E29**	
2.25–2.43	2.25–2.43	—	**E31**	
2.44–2.57	2.44–2.57	—	**E32**	
2.58–2.86	2.58–2.86	—	**E33**	
2.87–3.16	2.87–3.16	—	**E34**	
3.17–3.35	3.17–3.35	—	**E36**	
3.36–3.58	3.36–3.58	—	**E37**	
3.59–3.90	3.59–3.90	—	**E38**	
3.91–4.25	3.91–4.25	—	**E39**	
4.26–4.77	4.26–4.77	—	**E41**	
4.78–5.35	4.78–5.35	—	**E42**	
5.36–5.76	5.36–5.76	—	**E44**	
5.77–6.33	5.77–6.33	—	**E46**	
6.34–6.98	6.34–6.98	—	**E47**	
6.99–7.37	6.99–7.37	—	**E48**	
7.38–7.71	7.38–7.71	—	**E49**	
7.72–8.51	7.72–8.51	—	**E50**	
8.52–9.31	8.52–9.31	—	**E51**	
9.32–10.1	9.32–10.1	—	**E52**	
10.2–10.9	10.2–10.9	—	**E53**	
11.0–12.2	11.0–12.2	—	**E54**	
12.3–13.5	12.3–13.5	—	**E55**	
13.6–15.7	13.6–15.7	—	**E56**	
15.8–17.3	15.8–17.3	19.4–22.0	**E57**	
17.4–19.9	17.4–19.9	22.1–23.5	**E60**	
20.0–21.7	20.0–21.7	23.6–25.0	**E61**	
21.8–23.4	21.8–23.4	25.1–27.0	**E62**	
23.5–24.0	23.5–23.7	27.1–28.9	**E65**	
—	23.8–25.1	29.0–31.0	**E66**	
—	25.2–27.9	31.1–34.8	**E67**	
—	28.0–32.2	34.9–36.9	**E69**	
—	32.3–34.0	37.0–43.9	**E70**	
—	—	44.0–46.0	**E72**	
—	—	46.1–48.3	**E73**	
—	—	48.4–55.0	**E74**	
—	—	55.1–60.0	**E76**	

Table 216 for Class 48

Full Load Amps			Heater Catalog No	List Price $
48DA, 48GA	48HA	48JA		
0.34–0.36	—	—	**E3**	
0.37–0.40	—	—	**E4**	
0.41–0.43	—	—	**E5**	
0.44–0.47	—	—	**E6**	
0.48–0.51	—	—	**E7**	
0.52–0.56	—	—	**E8**	
0.57–0.62	—	—	**E9**	
0.63–0.67	—	—	**E11**	
0.68–0.73	—	—	**E12**	
0.74–0.77	—	—	**E13**	
0.78–0.84	—	—	**E14**	
0.85–0.93	—	—	**E16**	
0.94–1.00	—	—	**E17**	
1.01–1.10	—	—	**E18**	
—	—	—	**E19**	
1.11–1.21	—	—	**E23**	
1.22–1.38	—	—	**E24**	
1.39–1.54	—	—	**E26**	
1.55–1.73	—	—	**E27**	
1.74–1.91	—	—	**E28**	
1.92–2.02	—	—	**E29**	
2.03–2.19	—	—	**E31**	
2.20–2.32	—	—	**E32**	
2.33–2.58	—	—	**E33**	
2.59–2.85	—	—	**E34**	
2.86–3.02	—	—	**E36**	
3.03–3.23	—	—	**E37**	
3.24–3.52	—	—	**E38**	
3.53–3.83	—	—	**E39**	
3.84–4.30	—	—	**E41**	
4.31–4.82	—	—	**E42**	
4.83–5.19	—	—	**E44**	
5.20–5.71	—	—	**E46**	
5.72–6.29	—	—	**E47**	
6.30–6.64	—	—	**E48**	
6.65–6.95	—	—	**E49**	
6.96–7.67	—	—	**E50**	
7.68–8.39	—	—	**E51**	
8.40–9.19	—	—	**E52**	
9.20–9.94	—	—	**E53**	
9.95–10.9	—	—	**E54**	
11.0–12.2	—	—	**E55**	
12.3–14.2	—	—	**E56**	
14.3–15.6	—	—	**E57**	
—	—	—	**E59**	
15.7–17.9	—	—	**E60**	
18.0–19.6	—	—	**E61**	
19.7–22.3	—	—	**E62**	
22.4–24.0	—	—	**E65**	
24.1–25.9	—	—	**E66**	
26.0–29.5	27.1–30.0	—	**E67**	
29.6–32.5	30.1–33.2	—	**E69**	
32.6–33.5	33.3–35.7	—	**E70**	
33.6–36.9	35.8–39.4	—	**E71**	
37.0–39.2	39.5–43.4	—	**E72**	
39.3–43.1	43.5–46.9	—	**E73**	
43.2–47.4	47.0–51.5	—	**E74**	
47.5–50.0	51.6–57.0	—	**E76**	
50.1–55.2	57.1–62.8	—	**E77**	
55.3–60.0	62.9–69.1	—	**E78**	
—	69.2–75.0	—	**E79**	
—	75.1–83.3	—	**E80**	
—	—	50.0–55.9	**E88**	
—	—	56.0–60.9	**E89**	
—	—	61.0–65.9	**E91**	
—	—	66.0–69.9	**E92**	
—	—	70.0–75.9	**E93**	
—	—	76.0–81.9	**E94**	
—	83.4–86.9	82.0–86.9	**E96**	
—	87.0–92.9	87.0–92.9	**E97**	
—	93.0–100.0	93.0–97.9	**E98**	
—	—	98.0–107.9	**E99**	
—	—	108.0–113.9	**E101**	
—	—	114.0–125.0	**E102**	
—	—	126.0–138.0	**E103**	
—	—	139.0–153.0	**E104**	
—	—	154.0–163.0	**E106**	
—	—	164.0–180.0	**E107**	

Table 233 for Class 14, 17, 18, 22, 25, 26, 30, 32, 83, 84, 87 (3-Phase)

Full Load Amps					Heater Catalog No	List Price $
Size 00, 0, 1	Size 1¾	Size 2, 2½	Size 3, 3½	Size 4		
0.38–0.40	—	—	—	—	**E6**	
0.41–0.43	—	—	—	—	**E7**	
0.44–0.48	—	—	—	—	**E8**	
0.49–0.53	—	—	—	—	**E9**	
0.54–0.57	—	—	—	—	**E11**	
0.58–0.62	—	—	—	—	**E12**	
0.63–0.66	—	—	—	—	**E13**	
0.67–0.72	—	—	—	—	**E14**	
0.73–0.80	—	—	—	—	**E16**	
0.81–0.85	—	—	—	—	**E17**	
0.86–0.92	—	—	—	—	**E18**	
0.93–0.99	—	—	—	—	**E19**	
1.00–1.08	—	—	—	—	**E23**	
1.09–1.23	—	—	—	—	**E24**	
1.24–1.37	—	—	—	—	**E26**	
1.38–1.54	—	—	—	—	**E27**	
1.55–1.69	—	—	—	—	**E28**	
1.70–1.80	—	—	—	—	**E29**	
1.81–1.94	—	—	—	—	**E31**	
1.95–2.07	—	—	—	—	**E32**	
2.08–2.26	—	—	—	—	**E33**	
2.27–2.54	2.27–2.54	—	—	—	**E34**	
2.55–2.69	2.55–2.69	—	—	—	**E36**	
2.70–2.88	2.70–2.88	—	—	—	**E37**	
2.89–3.14	2.89–3.14	—	—	—	**E38**	
3.15–3.40	3.15–3.40	—	—	—	**E39**	
3.41–3.81	3.41–3.81	—	—	—	**E41**	
3.82–4.26	3.82–4.25	—	—	—	**E42**	
4.27–4.62	4.26–4.62	—	—	—	**E44**	
4.63–5.09	4.63–5.09	—	—	—	**E46**	
5.10–5.61	5.10–5.61	—	—	—	**E47**	
5.62–5.91	5.62–5.91	—	—	—	**E48**	
5.92–6.15	5.92–6.15	—	—	—	**E49**	
6.16–6.70	6.16–6.70	—	—	—	**E50**	
6.71–7.54	6.71–7.54	—	—	—	**E51**	
7.55–8.29	7.55–8.29	—	—	—	**E52**	
8.30–8.99	8.30–8.99	—	—	—	**E53**	
9.00–9.85	9.00–9.85	—	—	—	**E54**	
9.86–10.4	9.86–10.4	—	—	—	**E55**	
10.5–12.0	10.5–12.0	10.5–12.0	—	—	**E56**	
12.1–13.6	12.1–13.6	12.1–13.6	—	—	**E57**	
13.7–15.6	13.7–15.6	13.7–15.6	—	—	**E60**	
15.7–17.0	15.7–17.0	15.7–17.1	—	—	**E61**	
17.1–18.4	17.1–19.4	17.2–19.4	—	—	**E62**	
18.5–19.4	19.5–20.9	19.5–20.9	—	—	**E65**	
19.5–21.3	21.0–22.2	21.0–22.2	—	—	**E66**	
21.4–24.4	22.3–25.3	22.3–25.3	—	—	**E67**	
24.5–25.9	25.4–26.9	25.4–26.9	30.0–33.5	—	**E69**	
26.0–27.0	27.0–30.2	27.0–30.2	33.6–36.4	—	**E70**	
—	—	—	36.5–39.6	—	**E71**	
—	30.3–33.3	30.3–33.3	—	—	**E72**	
—	33.4–36.0	33.4–35.3	39.7–43.6	—	**E73**	
—	—	—	43.7–46.5	—	**E73A**	
—	—	35.4–41.5	46.6–51.6	—	**E74**	
—	—	41.6–45.0	51.7–54.4	—	**E76**	
—	—	45.1–52.3	54.5–58.0	—	**E77**	
—	—	52.4–55.7	58.1–63.0	—	**E78**	
—	—	55.8–60.0	63.1–67.7	—	**E79**	
—	—	—	67.8–72.4	—	**E80**	
—	—	—	—	—	**E88**	
—	—	—	—	56.9–60.9	**E89**	
—	—	—	—	61.0–63.9	**E91**	
—	—	—	—	64.0–67.7	**E92**	
—	—	—	—	67.8–72.4	**E93**	
—	—	—	72.5–80.0	72.5–77.7	**E94**	
—	—	—	80.1–88.1	77.8–85.9	**E96**	
—	—	—	88.2–91.5	86.0–91.9	**E97**	
—	—	—	91.6–96.8	92.0–96.7	**E98**	
—	—	—	96.9–99.0	96.8–105	**E99**	
—	—	—	99.1–108.0	—	**E101**	
—	—	—	—	—	**E102**	
—	—	—	—	106–115	**E103**	
—	—	—	—	116–130	**E104**	

Table 238 for Class 48

Full Load Amps				Heater Catalog No	List Price $
48DC	48GC	48HA	48JA		
0.30–0.32	—	—	—	**E3**	
0.33–0.35	—	—	—	**E4**	
0.36–0.38	—	—	—	**E5**	
0.39–0.41	—	—	—	**E6**	
0.42–0.44	—	—	—	**E7**	
0.45–0.49	—	—	—	**E8**	
0.50–0.54	—	—	—	**E9**	
0.55–0.58	—	—	—	**E11**	
0.59–0.63	—	—	—	**E12**	
0.64–0.67	—	—	—	**E13**	
0.68–0.73	—	—	—	**E14**	
0.74–0.81	—	—	—	**E16**	
0.82–0.87	—	—	—	**E17**	
0.88–0.94	—	—	—	**E18**	
0.95–1.00	—	—	—	**E19**	
1.01–1.10	—	—	—	**E23**	
1.11–1.26	—	—	—	**E24**	
1.27–1.40	—	—	—	**E26**	
1.41–1.58	—	—	—	**E27**	
1.59–1.74	—	—	—	**E28**	
1.75–1.85	—	—	—	**E29**	
1.86–1.99	—	—	—	**E31**	
2.00–2.11	—	—	—	**E32**	
2.12–2.31	—	—	—	**E33**	
2.32–2.59	—	—	—	**E34**	
2.60–2.75	—	—	—	**E36**	
2.76–2.95	—	—	—	**E37**	
2.96–3.21	—	—	—	**E38**	
3.22–3.48	—	—	—	**E39**	
3.49–3.89	—	—	—	**E41**	
3.90–4.35	—	—	—	**E42**	
4.36–4.73	—	—	—	**E44**	
4.74–5.21	—	—	—	**E46**	
5.22–5.74	—	—	—	**E47**	
5.75–6.05	—	—	—	**E48**	
6.06–6.46	—	—	—	**E49**	
6.47–6.95	—	—	—	**E50**	
6.96–8.09	—	—	—	**E51**	
8.10–9.29	—	—	—	**E52**	
9.30–10.4	—	—	—	**E53**	
—	—	—	—	**E54**	
10.5–10.9	—	—	—	**E55**	
11.0–12.0	—	—	—	**E56**	
12.1–14.5	—	—	—	**E57**	
14.6–16.8	—	—	—	**E60**	
16.9–18.4	16.9–18.4	—	—	**E61**	
18.5–20.9	18.5–20.9	—	—	**E62**	
21.0–22.5	21.0–22.5	—	—	**E65**	
22.6–24.3	22.6–24.7	—	—	**E66**	
24.4–27.2	24.8–27.2	27.1–30.0	—	**E67**	
27.3–29.2	27.3–29.2	30.1–33.2	—	**E69**	
29.3–30.0	29.3–32.0	33.3–35.7	—	**E70**	
—	32.1–34.9	35.8–39.4	—	**E71**	
—	—	39.5–43.4	—	**E72**	
—	35.0–37.8	43.5–46.9	—	**E73**	
—	37.9–41.7	—	—	**E73A**	
—	41.8–45.9	47.0–51.5	—	**E74**	
—	46.0–49.0	51.6–57.0	—	**E76**	
—	49.1–54.2	57.1–62.8	—	**E77**	
—	54.3–60.0	62.9–69.1	—	**E78**	
—	—	69.2–75.0	—	**E79**	
—	—	75.1–83.3	—	**E80**	
—	—	—	50.0–55.9	**E88**	
—	—	—	56.0–60.9	**E89**	
—	—	—	61.0–65.9	**E91**	
—	—	—	66.0–69.9	**E92**	
—	—	—	70.0–75.9	**E93**	
—	—	—	76.0–81.9	**E94**	
—	—	83.4–86.9	82.0–86.9	**E96**	
—	—	87.0–92.9	87.0–92.9	**E97**	
—	—	93.0–100.0	93.0–97.9	**E98**	
—	—	—	98.0–107.9	**E99**	
—	—	—	108–113.9	**E101**	
—	—	—	114–125.9	**E102**	
—	—	—	126–138.9	**E103**	
—	—	—	139–153.9	**E104**	
—	—	—	154–163.9	**E106**	
—	—	—	164–180.9	**E107**	

Table 313 for Class 14, 22 (1-Phase)

Full Load Amps			Heater	
Size 00, 0, 1	Size 1P	Size 2, 2½	Catalog No	List Price $
1.85–2.05	1.85–2.05	—	**K21**	
2.06–2.35	2.06–2.35	—	**K22**	
2.36–2.64	2.36–2.64	—	**K24**	
2.65–2.96	2.65–2.96	—	**K27**	
2.97–3.31	2.97–3.31	—	**K28**	
3.32–3.51	3.32–3.51	—	**K29**	
3.52–3.87	3.52–3.87	—	**K31**	
3.88–4.31	3.88–4.31	—	**K32**	
4.32–4.79	4.32–4.79	—	**K33**	
4.80–5.21	4.80–5.21	—	**K34**	
5.22–5.75	5.22–5.75	—	**K36**	
5.76–6.11	5.76–6.11	—	**K37**	
6.12–6.95	6.12–6.95	—	**K39**	
6.96–7.73	6.96–7.73	—	**K41**	
7.74–8.47	7.74–8.47	—	**K42**	
8.48–9.52	8.48–9.52	—	**K43**	
9.53–10.4	9.53–10.4	—	**K49**	
10.5–11.1	10.5–11.1	—	**K50**	
11.2–12.4	11.2–12.4	—	**K52**	
12.5–13.5	12.5–13.5	—	**K53**	
13.6–15.1	13.6–15.1	—	**K54**	
15.2–16.6	15.2–16.6	—	**K55**	
16.7–17.6	16.7–17.6	—	**K57**	
17.7–18.8	17.7–18.8	18.7–19.7	**K58**	
18.9–21.6	18.9–21.6	19.8–21.3	**K60**	
21.7–22.7	21.7–22.7	21.4–22.8	**K61**	
22.8–25.3	22.8–25.3	22.9–24.2	**K62**	
—	25.4–26.6	24.3–26.5	**K63**	
—	26.7–30.1	26.6–29.3	**K64**	
—	30.2–33.0	29.4–32.0	**K67**	
—	33.1–34.1	32.1–35.6	**K68**	
—	—	35.7–37.9	**K69**	
—	—	38.0–40.3	**K70**	
—	—	40.4–44.3	**K72**	
—	—	44.4–49.5	**K73**	
—	—	49.6–52.1	**K74**	
—	—	52.2–53.7	**K75**	
—	—	53.8–60.0	**K76**	

Table 316 for Class 48

Full Load Amps				Heater	
48DA	48GA	48HA	48JA	Catalog No	List Price $
1.69–1.88	—	—	—	**K21**	
1.89–2.05	—	—	—	**K22**	
2.06–2.21	—	—	—	**K23**	
2.22–2.44	—	—	—	**K24**	
2.45–2.70	—	—	—	**K26**	
2.71–2.92	—	—	—	**K27**	
2.93–3.27	—	—	—	**K28**	
3.28–3.56	—	—	—	**K29**	
3.57–3.83	—	—	—	**K31**	
3.84–4.23	—	—	—	**K32**	
4.24–4.57	—	—	—	**K33**	
4.58–4.97	—	—	—	**K34**	
4.98–5.67	—	—	—	**K36**	
5.68–6.11	—	—	—	**K37**	
6.12–6.91	—	—	—	**K39**	
6.92–7.65	—	—	—	**K41**	
7.66–8.4	—	—	—	**K42**	
8.5–8.9	—	—	—	**K43**	
9.0–10.1	9.12–9.6	—	—	**K49**	
10.2–11.2	9.7–10.4	—	—	**K50**	
11.3–12.3	10.5–11.4	—	—	**K52**	
12.4–13.3	11.5–12.1	—	—	**K53**	
13.4–14.1	12.2–12.9	—	—	**K54**	
14.2–15.0	13.0–13.7	—	—	**K55**	
15.1–16.2	13.8–14.8	—	—	**K56**	
16.3–17.5	14.9–16.4	—	—	**K57**	
17.6–18.6	16.5–18.2	—	—	**K58**	
18.7–19.9	18.3–19.5	—	—	**K60**	
20.0–21.3	19.6–20.9	—	—	**K61**	
21.4–22.8	21.0–22.8	23.2–25.1	—	**K62**	
22.9–25.1	22.9–24.7	25.2–27.3	—	**K63**	
25.2–27.6	24.8–27.6	27.4–30.4	—	**K64**	
27.7–30.0	27.7–30.5	30.5–33.3	—	**K67**	
—	30.6–33.9	33.4–36.5	—	**K68**	
—	34.0–37.3	36.6–39.3	—	**K69**	
—	37.4–40.2	39.4–43.5	—	**K70**	
—	40.3–41.9	43.6–46.6	43.0–46.5	**K72**	
—	42.0–45.9	46.7–51.1	46.6–50.9	**K73**	
—	46.0–50.9	51.2–56.3	51.0–55.9	**K74**	
—	51.0–52.9	56.4–61.1	56.0–59.1	**K75**	
—	53.0–57.7	61.2–64.9	59.2–68.7	**K76**	
—	57.8–60.0	65.0–71.9	—	**K77**	
—	—	72.0–80.7	68.8–80.7	**K78**	
—	—	80.8–92.7	80.8–92.7	**K85**	
—	—	92.8–100.0	92.8–103.9	**K86**	
—	—	—	104.0–113.5	**K87**	
—	—	—	113.6–127.9	**K89**	
—	—	—	128.0–143.9	**K92**	
—	—	—	144.0–163.9	**K94**	
—	—	—	164.0–180.0	**K96**	

Table 332 for Class 14, 17, 18, 22, 25, 26, 30, 32, 83, 84, 87 (3-Phase)

Full Load Amps					Heater Catalog No	List Price $
Size 00, 0, 1	Size 1¾	Size 2, 2½	Size 3, 3½	Size 4		
1.52–1.65	1.52–1.65	—	—	—	**K21**	
1.66–1.79	1.66–1.79	—	—	—	**K22**	
1.80–1.94	1.80–1.94	—	—	—	**K23**	
1.95–2.15	1.95–2.15	—	—	—	**K24**	
2.16–2.37	2.16–2.37	—	—	—	**K26**	
2.38–2.56	2.38–2.56	—	—	—	**K27**	
2.57–2.87	2.57–2.87	—	—	—	**K28**	
2.88–3.13	2.88–3.13	—	—	—	**K29**	
3.14–3.37	3.14–3.37	—	—	—	**K31**	
3.38–3.72	3.38–3.72	—	—	—	**K32**	
3.73–4.00	3.73–4.00	—	—	—	**K33**	
4.01–4.35	4.01–4.35	—	—	—	**K34**	
4.36–4.99	4.36–4.99	—	—	—	**K36**	
5.00–5.38	5.00–5.38	—	—	—	**K37**	
5.39–5.79	5.39–5.79	—	—	—	**K39**	
5.80–6.43	5.80–6.43	—	—	—	**K41**	
6.44–6.83	6.44–6.83	—	—	—	**K42**	
6.84–7.83	6.84–7.83	—	—	—	**K43**	
7.84–8.23	7.84–8.23	—	—	—	**K49**	
8.24–9.59	8.24–9.59	—	—	—	**K50**	
9.60–9.90	9.60–9.90	—	—	—	**K52**	
10.0–10.7	10.0–10.7	—	—	—	**K53**	
10.8–11.6	10.8–11.6	12.1–12.7	—	—	**K54**	
11.7–12.3	11.7–12.3	12.8–13.5	—	—	**K55**	
12.4–13.4	12.4–13.4	13.6–14.6	—	—	**K56**	
13.5–14.2	13.5–14.2	14.7–15.9	—	—	**K57**	
14.3–15.1	14.3–15.1	16.0–16.9	—	—	**K58**	
15.2–17.5	15.2–17.5	17.0–18.2	—	—	**K60**	
17.6–18.7	17.6–18.7	18.3–19.5	—	—	**K61**	
18.8–20.0	18.8–20.0	19.6–20.9	—	—	**K62**	
20.1–21.5	20.1–21.5	21.0–23.1	—	—	**K63**	
21.6–23.9	21.6–23.9	23.2–25.4	—	—	**K64**	
24.0–25.8	24.0–25.8	25.5–27.9	—	—	**K67**	
—	25.9–29.5	—	—	—	**K68**	
—	—	28.0–30.5	—	—	**K69**	
—	29.6–32.7	30.6–33.5	36.8–40.0	—	**K70**	
—	32.8–36.0	33.6–37.2	40.1–42.4	—	**K72**	
—	—	37.3–40.7	42.5–46.3	—	**K73**	
—	—	40.8–43.0	46.4–49.6	—	**K74**	
—	—	43.1–47.9	49.7–52.3	49.7–52.3	**K75**	
—	—	48.0–52.7	52.4–57.5	52.4–57.5	**K76**	
—	—	52.8–58.3	57.6–63.9	57.6–63.0	**K77**	
—	—	58.4–60.0	64.0–67.9	63.1–68.1	**K78**	
—	—	—	68.0–74.3	68.2–74.3	**K83**	
—	—	—	74.4–77.9	74.4–79.9	**K85**	
—	—	—	78.0–83.1	80.0–87.4	**K86**	
—	—	—	83.2–91.4	87.5–90.0	**K87**	
—	—	—	91.5–99.9	90.1–100.0	**K88**	
—	—	—	100.0–108.0	100.1–108.0	**K89**	
—	—	—	—	108.1–119.0	**K90**	
—	—	—	—	119.1–130.0	**K92**	
—	—	—	—	—	**K94**	
—	—	—	—	—	**K96**	

Table 335 for Class 48

Full Load Amps				Heater Catalog No	List Price $
48DC	48GC	48HA	48JA		
1.56–1.69	—	—	—	**K21**	
1.70–1.84	—	—	—	**K22**	
1.85–1.98	—	—	—	**K23**	
1.99–2.19	—	—	—	**K24**	
2.20–2.43	—	—	—	**K26**	
2.44–2.63	—	—	—	**K27**	
2.64–2.95	—	—	—	**K28**	
2.96–3.21	—	—	—	**K29**	
3.22–3.45	—	—	—	**K31**	
3.46–3.81	—	—	—	**K32**	
3.82–4.10	—	—	—	**K33**	
4.11–4.46	—	—	—	**K34**	
4.47–5.10	—	—	—	**K36**	
5.11–5.49	—	—	—	**K37**	
5.50–6.21	—	—	—	**K39**	
6.22–6.76	—	—	—	**K41**	
6.77–7.62	—	—	—	**K42**	
7.63–8.07	—	—	—	**K43**	
8.08–9.19	—	—	—	**K49**	
9.20–10.0	—	—	—	**K50**	
10.1–11.0	—	—	—	**K52**	
11.1–12.0	—	—	—	**K53**	
12.1–12.7	—	—	—	**K54**	
12.8–13.5	—	—	—	**K55**	
13.6–14.5	—	—	—	**K56**	
14.6–15.7	—	—	—	**K57**	
15.8–16.7	—	—	—	**K58**	
16.8–17.9	—	—	—	**K60**	
18.0–19.2	18.0–19.2	—	—	**K61**	
19.3–20.5	19.3–20.5	23.2–25.1	—	**K62**	
20.6–22.5	20.6–22.5	25.2–27.3	—	**K63**	
22.6–24.8	22.6–24.8	27.4–30.4	—	**K64**	
24.9–27.6	24.9–27.6	30.5–33.3	—	**K67**	
27.7–30.0	—	33.4–36.5	—	**K68**	
—	27.7–30.1	36.6–39.3	—	**K69**	
—	30.2–33.1	39.4–43.5	—	**K70**	
—	33.2–36.7	43.6–46.6	43.0–46.5	**K72**	
—	36.8–40.1	46.7–51.1	46.6–50.9	**K73**	
—	40.2–45.5	51.2–56.3	51.0–55.9	**K74**	
—	45.6–47.9	56.4–61.1	56.0–59.1	**K75**	
—	48.0–52.7	61.2–64.9	59.2–68.7	**K76**	
—	52.8–55.1	65.0–71.9	—	**K77**	
—	55.2–60.0	72.0–80.7	68.8–80.7	**K78**	
—	—	80.8–92.7	80.8–92.7	**K85**	
—	—	92.8–100.0	92.8–103.9	**K86**	
—	—	—	104.0–113.5	**K87**	
—	—	—	113.6–127.9	**K89**	
—	—	—	128.0–143.9	**K92**	
—	—	—	144.0–163.9	**K94**	
—	—	—	164.0–180.0	**K96**	

Ordering Information

► 4th character of starter or contactor catalog number indicates model.

AC Coils — For Class 14, 17, 18, 22, 25, 26, 30, 32, 36, 37, 40, 43, 83, 84, 87, 88

	Size	Model	Volts 60Hz	Volts 50Hz	Catalog Number	List Price $
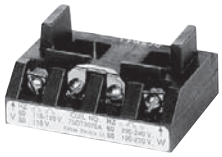	00–2½	P U (ESP200)	24 120 110–120/220–240 208 220–240 277 220–240/440–480 440–480 575–600	24 110 110/190–220 — 190–220 240 190–220/380–440 380–440 550	**75D73070J** **75D73070F** **75D73070A** **75D73070D** **75D73070G** **75D73070L** **75D73070C** **75D73070H** **75D73070E**	
	3 , 3½	P U (ESP200)	24 120 110–120/220–240 208 220–240 277 220–240/440–480 440–480 575–600	24 110 110/190–220 — 190–220 240 190–220/380–440 380–440 550	**75D73251J** **75D73251F** **75D73251A** **75D73251D** **75D73251G** **75D73251L** **75D73251C** **75D73251H** **75D73251E**	
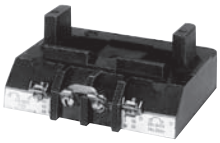	4	G U (ESP200)	24 120 120/220–240 208 220–240 277 220–240/440–480 440–480 575–600	24 110 110/190–220 — 190–220 240 190–220/380–440 380–440 550	**75D70131J** **75D70131F** **75D70131A** **75D70131D** **75D70131G** **75D70131L** **75D70131C** **75D70131H** **75D70131E**	
	4, 5	V (Vacuum)	23-26 110-127 200-220 220-240 240-277 380-420 440-480 575-600	23-26 110-127 200-220 220-240 240-277 380-420 440-480 575-600	**3RT1966-5AB31** **3RT1966-5AF31** **3RT1966-5AM31** **3RT1966-5AP31** **3RT1966-5AU31** **3RT1966-5AV31** **3RT1966-5AR31** **3RT1966-5AT31**	
	5	P	23-26 110-127 200-220 220-240 240-277 380-420 440-480 575-600	23-26 110-127 200-220 220-240 240-277 380-420 440-480 575-600	**3RT1965-5AB31** **3RT1965-5AF31** **3RT1965-5AM31** **3RT1965-5AP31** **3RT1965-5AU31** **3RT1965-5AV31** **3RT1965-5AR31** **3RT1965-5AT31**	
	6	P V (Vacuum)	23-26 110-127 200-220 220-240 240-277 380-420 440-480 575-600	23-26 110-127 200-220 220-240 240-277 380-420 440-480 575-600	**3RT1975-5AB31** **3RT1975-5AF31** **3RT1975-5AM31** **3RT1975-5AP31** **3RT1975-5AU31** **3RT1975-5AV31** **3RT1975-5AR31** **3RT1975-5AT31**	
	7	H	100-250 150-500	100-250 150-500	**75ZAF750-70** **75ZAF750-71**	
	8	H	100-250	100-250	**75ZAF1650-70**①	

① Set of 2 coils. Recommend to change printed circuit board when changing coils. **49ZP1650** see page 17-134.

Ordering Information

- ► 4th character of starter or contactor catalog number indicates model.
- ► DC Coils for Size 00-4 require Late Break Interlock.

DC Coils — For Class 14, 17, 18, 22, 25, 26, 30, 32, 40, 43

	Size	Model	Volts DC	Catalog Number	List Price $
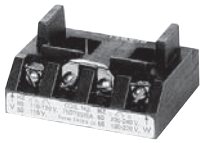	00–2½	P U (ESP200)	12 24 32 48 125 250	**75D73070R** **75D73070S** **75D73070T** **75D73070U** **75D73070V** **75D73070W**	
	3, 3½	P U (ESP200)	12 24 32 48 125 250	**75D73251R** **75D73251S** **75D73251T** **75D73251U** **75D73251V** **75D73251W**	
	4	G U (ESP200)	48 125 250	**75D70131U** **75D70131V** **75D70131W**	
	4, 5	V (Vacuum)	23-26 42-48 110-127 240-277	**3RT1966-5AB31** **3RT1966-5AD31** **3RT1966-5AF31** **3RT1966-5AU31**	

Note: For sizes 7 & 8 contactors the AC coils are used for DC see page 17-131.

Late Break Auxiliary Contacts

	Control Size	Model	Catalog Number	List Price $
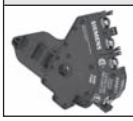	00–4	P, G, S, T	**49AB01LB**	

Board for Size 8 Contactor

	Control Size	Model	Catalog Number	List Price
	8	H	**49ZP1650**	

Contact Kits – Single Pole Stationary and Movable Contacts, Contact Spring ①

Description	Size	Number of Poles in Kit	Model (4th position in part number)	Catalog Number	List Price $
Class 14, 17, 18, 22, 25, 26, 30, 32, 36, 37, 40, 43, 83, 84, 87, 88	Internal Aux Contact (00-1-¾) 00 0		P, U P, U P, U	**75AF14** **75BF14** **75CF14**	
	1 1¾–1P	1	P, U P, U	**75DF14** **75EF14**	
	2	1	P, U	**75FP14**	
	2½	1	P, U	**75GP14**	
	3 3½	1	P, U P, U	**75HF14** **75IF14**	
	4 4 (Vacuum)	1 3 (Bottles)	G, T V, C	**75JG14** **3RT1964-6V**	
	5 5 (Vacuum)	3 3 (Bottles)	P V, C	**3RT1966-6A** **3RT1966-6V**	
	6 6 (Vacuum)	3 3 (Bottles)	P V, C	**3RT1976-6A** **3RT1976-6V**	
14, 40	7	3	H	**49ZL750**	
	8	3	H	**49ZL1650**	

Armature and Magnet Kits

Size	Catalog Number	List Price $
00–2½	**49AMSA2**	
3–3½	**49AMSA3**	
4	**49AMSA4**	

① On 3-phase controls, all 3-poles should be replaced - 3 kits required.

Coil VA Ratings

Device Type	Contactor Size	Amps	Volts	Number of Poles	Total Inrush VA	Total Sealed VA
NEMA Starter	00 thru 2 1/2	—	—	—	218	25
	3 thru 3 1/2	—	—	—	310	26
	4	—	—	—	510	51
	5	—	—	—	590	6.7
	6	—	—	—	830	9.2
	7	—	—	—	850	12
	8	—	—	—	1900	48
	4,5,6 (Vacuum)	—	—	—	630	7.4
Lighting Contactor Mechanically Held (CLM)	—	20	—	2-12	625	6
	—	30	—	2-5	410	40
	—	60	—	2-3	410	40
	—	60	—	4-5	600	40
	—	100 - 200	—	2-3	900	200
	—	100 - 200	—	4-5	1300	130
	—	300 - 400	—	3	1600	550
Lighting Contactor Electrically Held Held (LC)	—	30	ALL	2-12	248	28
Lighting Contactor Electrically Held Held (LE)	—	20	ALL	3 and 4	31.7	4.8
	—	30	ALL	3 and 4	87	9.4
	—	60	ALL	3	166	12.6
	—	100	ALL	3	300	21
	—	200	ALL	3	300	5.6
	—	300	ALL	3	590	6.7
	—	400	ALL	3	830	9.2

Overload Relays①② – For Class 14, 17, 18, 22, 25, 26, 30, 32, 83, 84, 87

Size	Half Size	Model	Number Poles	Ambient Comp Bimetal			
				Catalog Number (1) NC	List Price $	Catalog Number (1) NO/NC	List Price $
00–1	—	P	1 3	**48DC18AA3** **48DC38AA3**		**48DC39AA3**	
1P	—	P	1	**48EC18AA3**			
—	1¾	P	3	**48EC38AA3**		**48EC39AA3**	
2	—	P	1 3	**48GC18AA3** **48GC38AA3**		**48GC39AA3**	
—	2½	P	1 3	**48GC18AA3** **48GC38AA3**		**48GC39AA3**	
3	—	P	3	**48HC38AA3**			
—	3½	P	3	**48HC38AA3**			
4	—	G	3	**48JC38AA3**			

For Starter and Contactor replacement parts not found in this section, please refer to Field Modification kits found starting on page 17-105.

① For replacement Solid State overload relays, please see the Overload Relay section found starting on page 17-66.

② Includes overload mounting plate to be coupled to contactor mounting plate.

Power Pole Kits	Class	Enclosure type	Contactor Size (Amp)	Description	Catalog No.
	LC	Open, 1, 12, 4/4X	30	Single power pole Double power pole	**49LCPP1A** **49LCPP2A**

Replacement Coil Kits	Class	Enclosure type	Description	Catalog No.
	LC	30	24V 60Hz / 20V 50Hz 115-120V 60Hz / 110V 50Hz 200-208V 60Hz 230-240V 60Hz / 220V 50Hz 277V 60Hz / 240V 50Hz 347V 60Hz 460-480V 60Hz / 440V 50Hz 575-600V 60Hz / 550V 50Hz	**75LCC024A** **75LCC120A** **75LCC208A** **75LCC240A** **75LCC277A** **75LCC347A** **75LCC480A** **75LCC600A**
	LE	20, 30	NA	**NA**
		60	24VAC 50/60Hz 110VAC 50Hz / 120VAC 60Hz 208VAC 50/60Hz 220VAC 50Hz / 240VAC 60Hz 277VAC 60Hz 347VAC 60Hz 480VAC 60Hz 600VAC 60Hz	**3RT19355AC21** **3RT19355AK61** **3RT19355AM21** **3RT19355AP61** **3RT19355AU61** **3RT19355AW61** **3RT19355AV61** **3RT19355AT61**
		100	24VAC 50/60Hz 110VAC 50Hz / 120VAC 60Hz 208VAC 50/60Hz 220VAC 50Hz / 240VAC 60Hz 277VAC 60Hz 347VAC 60Hz 480VAC 60Hz 600VAC 60Hz	**3RT19455AC21** **3RT19455AK61** **3RT19455AM21** **3RT19455AP61** **3RT19455AU61** **3RT19455AW61** **3RT19455AV61** **3RT19455AT61**

Replacement Contact Kits	Class	Enclosure type	Description	Catalog No.
	LC	30	NA	**NA**
	LE	20, 30	NA	**NA**
		60 100 200 300 400	1 contact kit includes 3 moving and 6 fixed contacts.	**3RT1935-6A** **3RT1945-6A** **3RT1956-6A** **3RT1965-6A** **3RT1975-6A**

AC Coils 20 Amps②

CLM4097341	Type	Contactor Size	Number of Poles	120V, 60Hz 110V, 50Hz	List Price $	240V, 60Hz 208V, 50Hz	List Price $	277V 50/60Hz	List Price $
	CLM	20 Amp	2–12	**CLM4097341**		**CLM4097342**		**CLM4097343**	

AC Coils 30–400 Amps③

CLMC4C120 **CLMGU3C120**	Type	Contactor Size	Number of Poles	Catalog Number 24V AC	120V AC	208V AC	220/240V AC	277V AC	480V AC	600V AC	List Price $
	CLM†C	30 Amp	2–3-Pole 4-Pole 5-Pole	**CLMC4C024** **CLMC4C024** **CLMC5C024**	**CLMC4C120** **CLMC4C120** **CLMC5C120**	**CLMC4C208** **CLMC4C208** **CLMC5C208**	**CLMC4C240** **CLMC4C240** **CLMC5C240**	**CLMC4C277** **CLMC4C277** **CLMC5C277**	**CLMC4C480** **CLMC4C480** **CLMC5C480**	**CLMC4C600** **CLMC4C600** **CLMC5C600**	
	CLM†D	60 Amp	2–3-Pole 4-Pole 5-Pole	**CLMD3C024** **CLMD5C024** **CLMD5C024**	**CLMD3C120** **CLMD5C120** **CLMD5C120**	**CLMD3C208** **CLMD5C208** **CLMD5C208**	**CLMD3C240** **CLMD5C240** **CLMD5C240**	**CLMD3C277** **CLMD5C277** **CLMD5C277**	**CLMD3C480** **CLMD5C480** **CLMD5C480**	**CLMD3C600** **CLMD5C600** **CLMD5C600**	
	CLM†E	100, 200 Amp	2–3-Pole 4-Pole 5-Pole	**CLME3C024** **CLME5C024** **CLME5C024**	**CLME3C120** **CLME5C120** **CLME5C120**	**CLME3C208** **CLME5C208** **CLME5C208**	**CLME3C240** **CLME5C240** **CLME5C240**	**CLME3C277** **CLME5C277** **CLME5C277**	**CLME3C480** **CLME5C480** **CLME5C480**	**CLME3C600** **CLME5C600** **CLME5C600**	
	CLM†G Latching Coil	300/400 Amp	2–3-Pole	—	**CLMGL3C120**	**CLMGL3C208**	**CLMGL3C240**	**CLMGL3C277**	**CLMGL3C480**	**CLMGL3C600**	
	Unlatch Coil		2–3-Pole	—	**CLMGU3C120**	**CLMGU3C208**	**CLMGU3C240**	**CLMGU3C277**	**CLMGU3C480**	**CLMGU3C600**	

Control Module Rectifier③

Type	Device	Contactor Size	Number of Poles	Catalog Number	List Price $
CLM	CLM†C to CLM†F	30–200 Amps	All	**CLMKCMR**	

① Product Category: IEC.
② Coil kits for 20 amp CLM contactors include the coil clearing auxiliary contact.
③ For 30–200 amp CLM contactors, in the event that either the coil or the control module fails, it is recommended that both be replaced.

Ordering Information

- **For CLM:** 5th character of contactor catalog number indicates Frame Size.
- **For CMB, CMF, CMN:** 4th character of contactor catalog number indicates Frame Size.

Main Contacts 20 Amp Lighting Contactors

CLM4097334

Type	Contactor Size	Number of Poles	Location	Catalog Number	List Price $
CLM	20 Amp	2 3 4 6	Top or Bottom Top Top or Bottom Top or Bottom	**CLM4097331** **CLM4097332** **CLM4097333** **CLM4097334**	

Main Contacts 30–400 Amp Lighting Contactors

Type	Frame Size	Contactor Size	Number of Poles	Catalog Number	List Price $
CLM	C	30 Amp	2 3 4 5	**CLMCCK02** **CLMCCK03** **CLMCCK04** **CLMCCK05**	
	D	60 Amp	2 3 4 5	**CLMDCK02** **CLMDCK03** **CLMDCK04** **CLMDCK05**	
	E	100 Amp	2 3 4 5	**CLMECK02** **CLMECK03** **CLMECK04** **CLMECK05**	
	F	200 Amp	2 3 4 5	**CLMFCK02** **CLMFCK03** **CLMFCK04** **CLMFCK05**	
	G	300 Amp	2 3	**CLMGCK02** **CLMGCK03**	
	H	400 Amp	2 3	**CLMHCK02** **CLMHCK03**	

Auxiliary Contact Blocks 20 Amp Lighting Contactors②

Type	Contactor Size	Contacts	Catalog Number	List Price $
CLM	20 Amp	1 Form C NO, NC Contact 2 Form C NO, NC Contacts	**CLM4097291** **CLM4097292**	

Auxiliary Contact Blocks 30–400 Amp Lighting Contactors

CLMFCAK11

Type	Frame Size	Contactor Size	Contact Configuration	Catalog Number	List Price $
CLM	C to F②	30–200 Amps	1 NO and 1 NC 2 NC 2 NO 1 Coil Clearing NO and NC	**CLMFCAK11** **CLMFCAK02** **CLMFCAK20** **CLMFCCK11**	
	G to H①	300–400 Amps	1 NO and 1 NC 2 NC 2 NO 1 Coil Clearing NO and NC	**CLMHCAK11** **CLMHCAK02** **CLMHCAK20** **CLMHCCK11**	

① Maximum 1 block per contactor.
② Maximum 2 blocks per contactor.

Replacement Handle Assemblies and Disconnect Mechanisms
Enclosure Types 1, 3R, 4, 4X Stainless Steel & 12

Class	Disconnect (Amps)	Enclosure Size	Handle Assembly Only		Handle Assembly and Disconnect Mechanism	
			Catalog Number	List Price $	Catalog Number	List Price $
17, 25, 32, 84, 87, CM, LE	30, 60 & 100	All Standard and Extra-wide Sizes	**75D73944015**		**75D68257103**	
37, 88	30 & 60		**75D73944018**		**75D68257048**	
17, 25, 32, 84	200		**75D73944015**		**75D68257105**	
37, 88, CM, LE	200		**75D73944015**		**75D68257063**	
87	200		**75D73944023**		**75D68257068**	
17, 25, 37, 87, 88, CM, LE	400 & 600		**75D73944027**		**75D68257078**	

Class	Motor Circuit Interrupter (Amps)	Enclosure Size	Handle Assembly Only		Handle Assembly and Disconnect Mechanism	
			Catalog Number	List Price $	Catalog Number	List Price $
18, 26, 32, CM, LE	3 - 125	(24"H x 11"W x 8"D), (24"H x 20"W x 8"D)	**75D73944025**		**75D68257080**	
18, 26, 32	100 - 125	(36"H x 24"W x 8"D)	**75D73944025**		**75D68257073**	
18, 26, 32	150 & 250	All Standard Sizes	**75D73944028**		**75D68257089**	
18, 26, 37, 87, 88, CM	300 - 600		**75D73944027**		**75D68257078**	
87	3 - 125		**75D73944025**		**75D68257080**	
87	150		**75D73944028**		**75D68257089**	
87	250		**75D73944011**		**75D68257077**	
37, 88	30 - 125		**75D73944025**		**75D68257073**	
37, 84, 88, CM	150 - 250		**75D73944011**		**75D68257077**	
84	3 - 125		**75D73944025**		**75D68257074**	

Quarter Turn Assemblies

Description		Class	Enclosure Type	Catalog Number	List Price $
	Quarter-Turn Latch	17, 18, 25, 26, 32, 87 & 88	1, 3/3R & 12	75D46260004	
			4 & 4X	75D46260005	

Class SMF and MMS Open Type

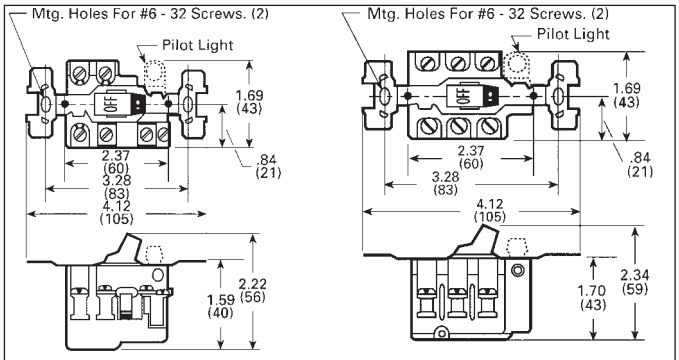

Class SMF
①Types FO–1, 1P, 2, 2P
(with toggle operator)

Class MMS
①Types KO–1, 1A, 1B, 2, 2B, 2C
(with toggle operator)

NEMA Type 1B General Purpose Flush Mounting

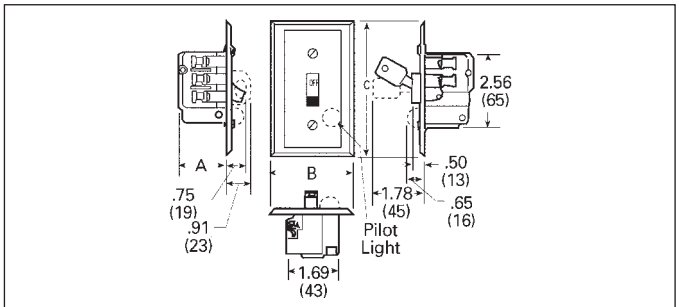

Device	Type of Operator	Type	Dimensions in Inches (mm) A	B	C
Class SMF Fractional HP Starter	Toggle	**FF1, 1P, 2, 2P** **FS1, 1P, 2, 2P**	1.44 (37)	2.75 (70)	4.50 (114)
		FSJ1P, 2P	1.44 (37)	3.50 (89)	5.25 (133)
	Key	**FF3, 3P, 4, 4P** **FS3, 3P, 4, 4P**	1.44 (37)	2.75 (70)	4.50 (114)
		FSJ3P, 4P	1.44 (37)	3.50 (89)	5.25 (133)
Class MMS Motor Starting Switch	Toggle	**KF1, 1A, 1B, 2, 2B, 2C** **KS1, 1A, 1B, 2, 2B, 2C**	1.75 (44)	2.75 (70)	4.50 (114)
		KSJ1A, 1B, 2B, 2C	1.75 (44)	3.50 (89)	5.25 (133)
	Key	**KF3, 3A, 3B, 4, 4B, 4C** **KS3, 3A, 3B, 4, 4B, 4C**	1.75 (44)	2.75 (70)	4.50 (114)
		KSJ3A, 3B, 4B, 4C	1.75 (44)	3.50 (89)	5.25 (133)

NEMA Type 3R, 4 and 12

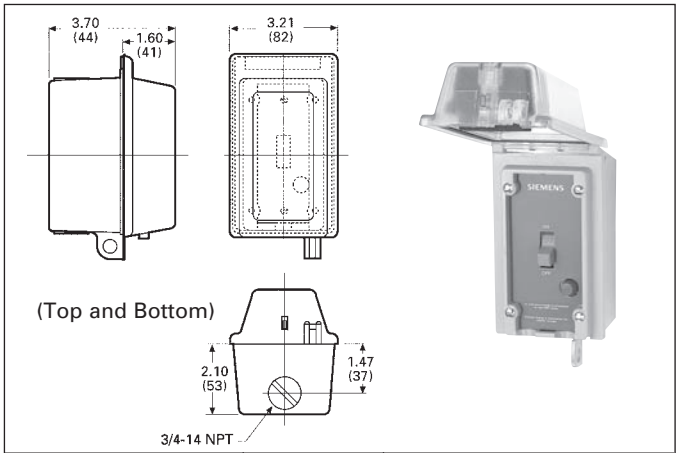

Device	Class	Type
Fractional HP Starter	SMF	**FWN1, 1P, FWN2, 2P** **FWN3, 3P, FW4, 4P**
Motor Starting Switch	MMS	**KWN1, 1A, 1B, KWN2, 2B, 2C** **KWN3, 3A, 3B, KWN4, 4B, 4C**

NEMA Type 4 Watertight Die Cast Zinc Enclosure

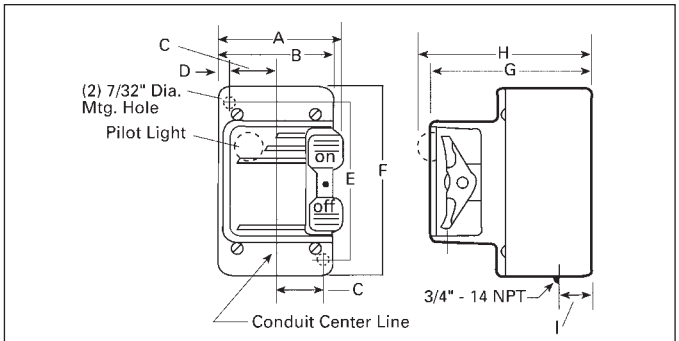

Dimensions in Inches (mm)								
A	**B**	**C**	**D**	**E**	**F**	**G**	**H**	**I**
3.00 (76)	2.75 (70)	1.13 (28)	0.25 (6)	3.75 (95)	4.69 (119)	4.25 (108)	4.56 (116)	0.78 (20)

Device	Class	Type
Fractional HP Starter	SMF	**FW1, 1P, 2, 2P**
Motor Starting Switch	MMS	**KW1, 1A, 1B, 2, 2B, 2C**

NEMA Type 1 General Purpose Surface Mounting Enclosures

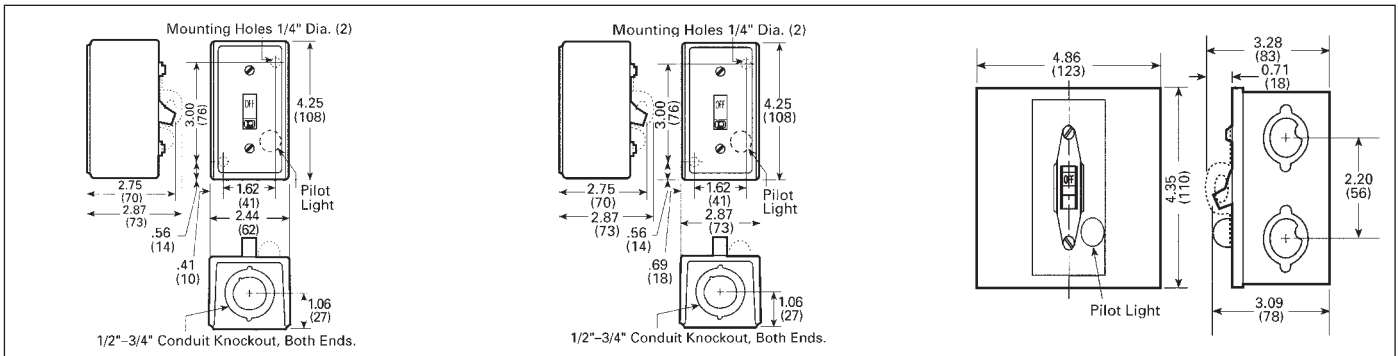

Standard Size—Class SMF and MMS
Types FG & KG (Single-Unit)

Oversized—Class SMF and MMS
Types FGJ & KGJ (Single-Unit)

Jumbo MMSKE2
½″–¾″ Knock-Out On Back and Sides

Note: Dimensions for reference, not for construction. Dimensions are in inches (mm).

① Dimensions typical for key operator devices.

NEMA Type 7 and 9 Cast Aluminum Enclosure

Dimensions in Inches (mm)					
A	B	C	D	G	H
4.00 (101)	5.75 (146)	1.38 (35)	6.36 (161)	4.38 (111)	1.20 (30)

Device	Class	Type
Fractional HP Starter	SMF	**FR1, FR2**
Motor Starting Switch	MMS	**KR1, KR2**

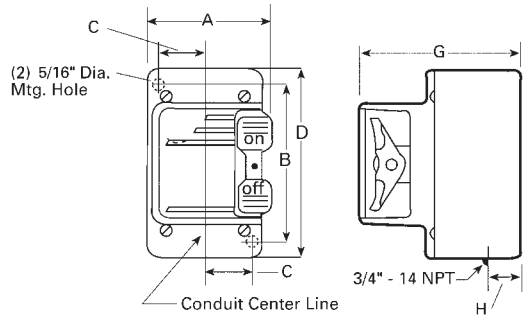

NEMA Type 1 General Purpose Enclosure For Two Unit Devices

Device	Type of Operator	Class	Type
One Starter	Toggle	SMF	**FG02, 02P**
	Key	SMF	**FG04P**
Two Starters	Toggle	SMF	**FG222, 222P**
	Key	SMF	**FG44P**
One Starter and One Sel. Switch①	Toggle	SMF	**FG71, 71P, 72, 72P**
	Key	SMF	**FG74P**
Reversing Switch②	Toggle	MRS	**KG11, 11A, 11B, 22, 22A, 22B, 22C**
Two Speed Starter	Toggle	SMF	**FG11, 11P, 22, 22P**
Two Speed Switch	Toggle	MMS	**KG11, 11A, 11B, 22, 22B, 22C**

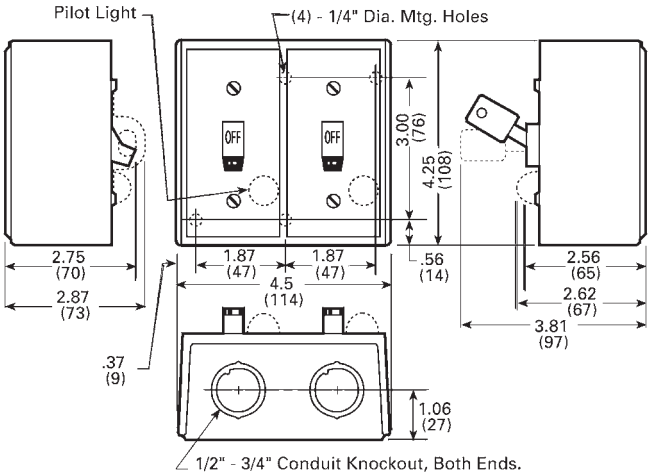

NEMA Type 1B General Purpose Flush Mounting For Two Unit Devices

Device③	Type of Operator	Class	Type	A	B	C	D
Two Starters	Toggle	SMF	**FF22, 22P**	5.25 (133)	3.75 (95)	5.25 (133)	1.44 (37)
			FS22P	4.56 (116)	3.50 (89)	4.50 (114)	1.44 (37)
	Key	SMF	**FF44P**	5.25 (133)	3.75 (95)	5.25 (133)	1.44 (37)
			FS44P	4.56 (116)	3.50 (89)	4.50 (114)	1.44 (37)
One Starter and One Selector Switch④	Toggle	SMF	**FF71, 71P, 72, 72P**	5.25 (133)	0.75 (19)	5.25 (133)	2.00 (51)
			FS71P, 72P	4.56 (116)	3.50 (89)	4.50 (114)	2.00 (51)
	Key	SMF	**FF74P**	5.25 (133)	3.75 (95)	5.25 (133)	2.00 (51)
			FS74P	4.56 (116)	3.50 (89)	4.50 (114)	2.00 (51)
Reversing Switch	Toggle	MRS	**KF11, 11A, 11B KF22, 22A 22B, 22C**	5.25 (133)	3.75 (95)	5.25 (133)	1.75 (44)
Two Speed Switch	Toggle	SMF	**FF11, 11P, 22, 22P**	5.25 (133)	3.75 (95)	5.25 (133)	1.44 (37)
Two Speed Switch	Toggle	MMS	**KF11, 11A, 11B 22, 22B, 22C**	5.25 (133)	3.75 (95)	5.25 (133)	1.44 (37)

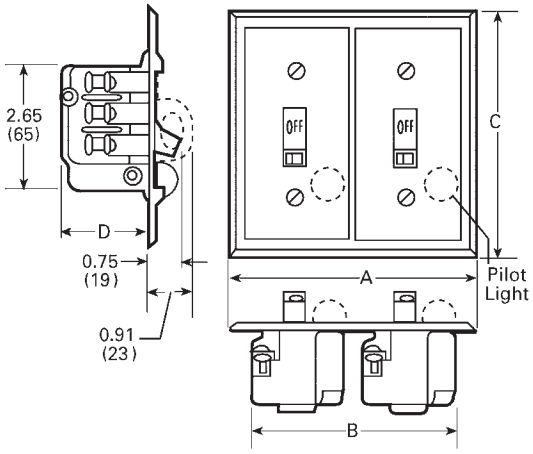

Note: Dimensions for reference, not for construction. Dimensions are in inches (mm).

① Selector switch is on the left, increases overall depth to 3.50 in. (89 mm).
② Only one pilot light (located on right) is used on MRS switches.
③ Dimensions include factory wired power connections.
④ Selector switch is on the left, extends 1.62 in. (41 mm) from mounting surface.

3RV102

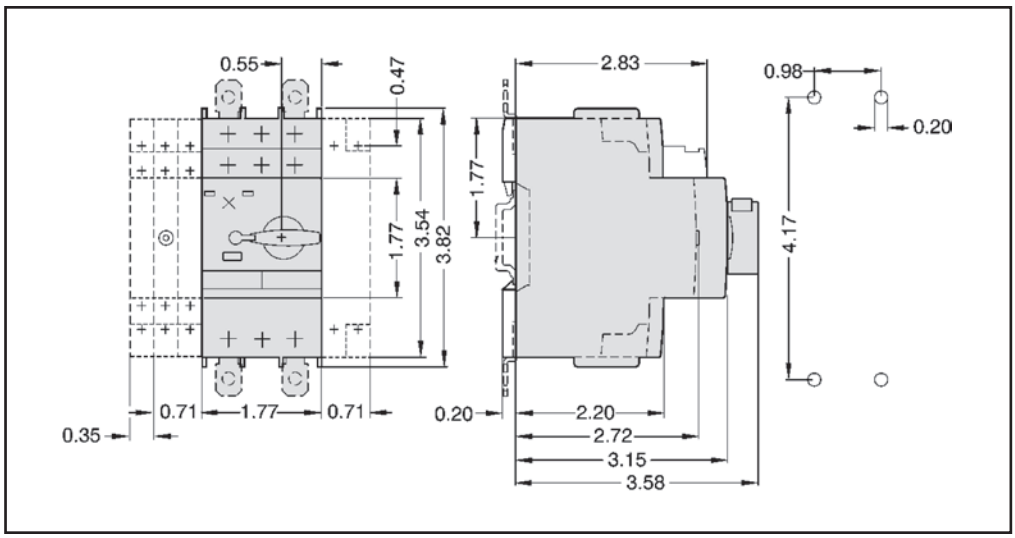

Class 11 - NEMA 1 Enclosure

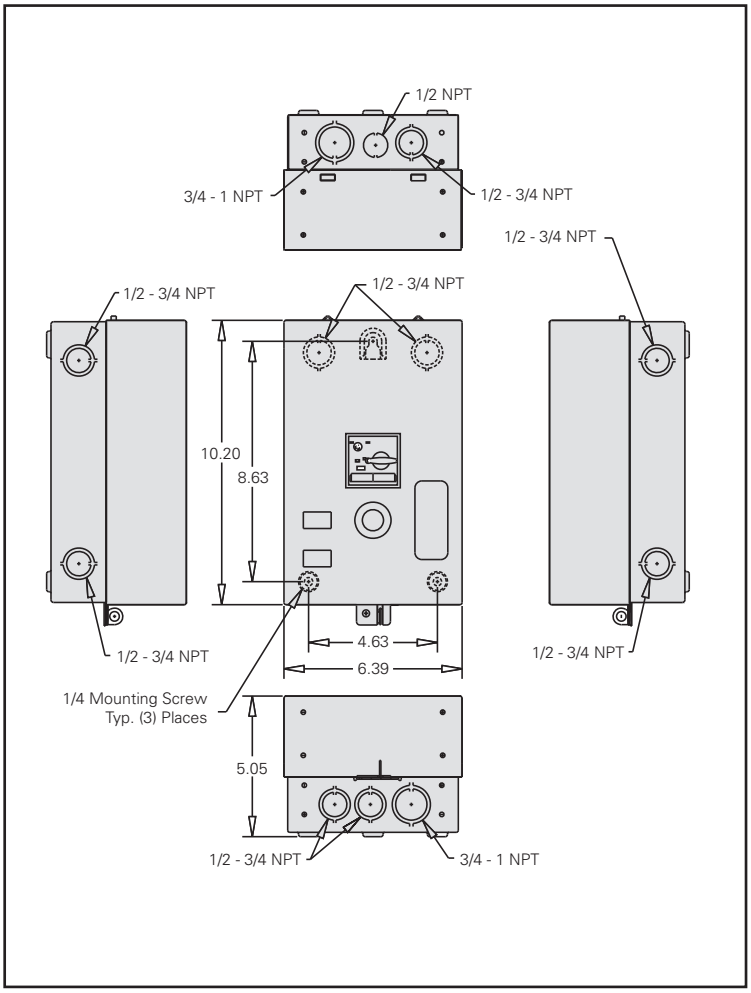

Class 11 - NEMA 7 & 9, 3 & 4, and NEMA 7 & 9 Enclosure

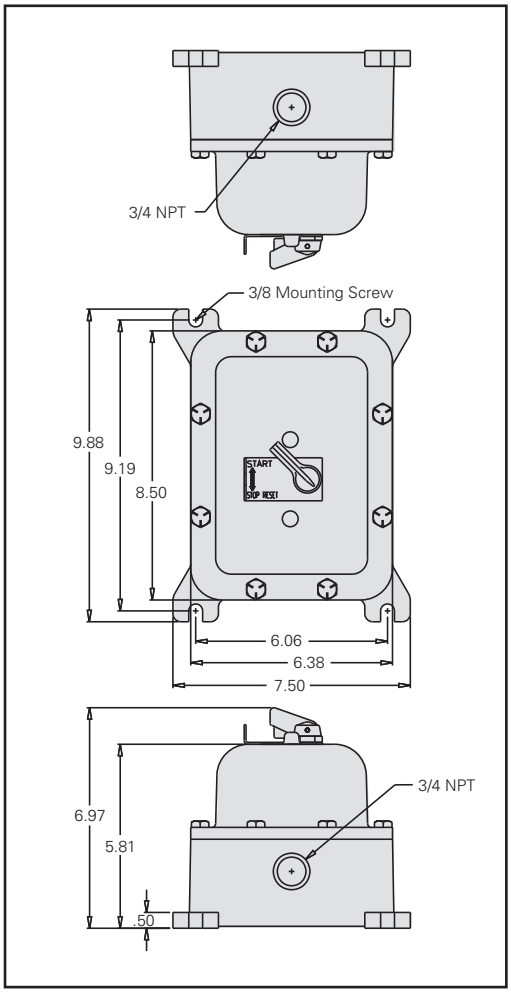

Note: Dimensions in inches (millimeters). Dimensions for reference, not for construction. Contact Sales Office for dimensions not listed.

Figure 1

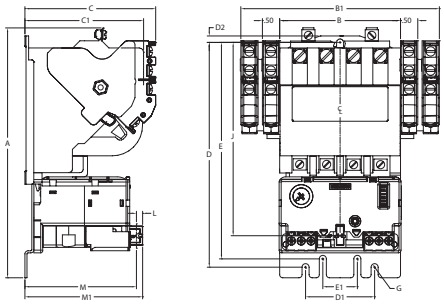

Figure 2

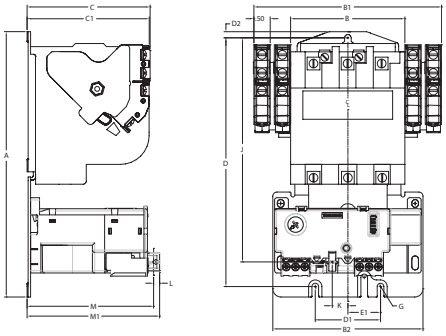

Figure 3

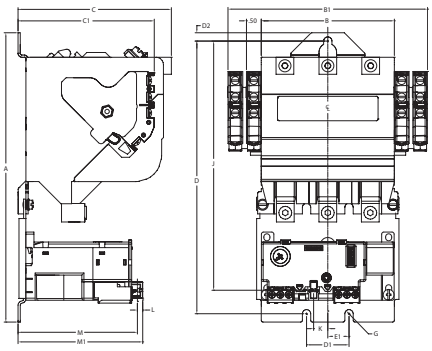

Figure 4

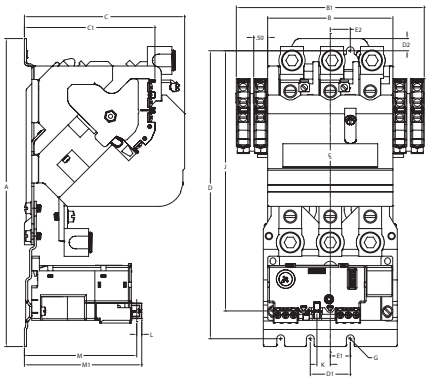

Figure 5

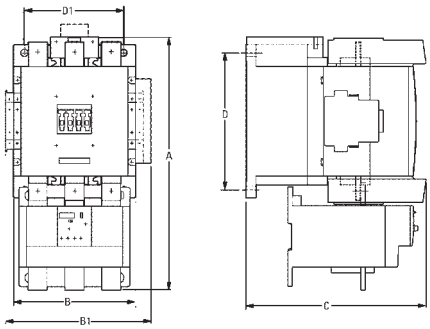

Open Type Solid State Overload

Size	Figure	Outline Dimensions						Mounting Dimensions						Mounting Screw	Reset Dimensions				
		A	B	B1	B2	C	C1	D	D1	D2	E	E1	E2	G	J	K	L	M	M1
00–1¾	1	7.44 (189)	3.50 (89)	5.75 (146)	—	3.75 (95)	3.50 (89)	6.50 (165)	2.00 (51)	0.19 (5)	6.27 (159)	1.00 (25)	—	#10	5.60 (142)	—	0.18 (5)	3.23 (82)	3.41 (87)
2–2½	2	8.13 (207)	3.50 (89)	5.75 (146)	4.60 (117)	4.00 (102)	3.77 (96)	7.62 (194)	2.00 (51)	0.19 (5)	—	1.00 (25)	—	#10	6.87 (174)	0.48 (12)	0.18 (5)	3.88 (99)	4.06 (103)
3–3½	3	9.78 (248)	4.50 (114)	6.75 (171)	—	5.19 (132)	4.66 (118)	9.22 (234)	1.44 (37)	0.28 (7)	—	0.72 (18)	—	0.25 (6)	8.43 (214)	0.48 (12)	0.18 (5)	4.04 (103)	4.22 (107)
4	4	11.06 (281)	4.50 (114)	6.75 (171)	—	5.75 (146)	4.66 (118)	10.34 (263)	1.44 (37)	0.44 (11)	—	0.72 (18)	0.72 (18)	0.25 (6)	9.35 (237)	0.48 (12)	0.18 (5)	4.04 (103)	4.22 (107)
5	5	12.76 (324)	5.71 (145)	6.89 (175)	—	8.54 (217)	—	7.09 (180)	4.72 (120)	—	—	—	—	0.35 (9)	—	—	—	—	—
6	6	13.03 (331)	6.30 (160)	7.48 (190)	—	9.29 (236)	—	7.09 (180)	5.12 (130)	—	—	—	—	0.35 (9)	—	—	—	—	—

Note: Dimensions in inches (millimeters). Dimensions for reference, not for construction. Contact Sales Office for dimensions not listed.

Figure 1

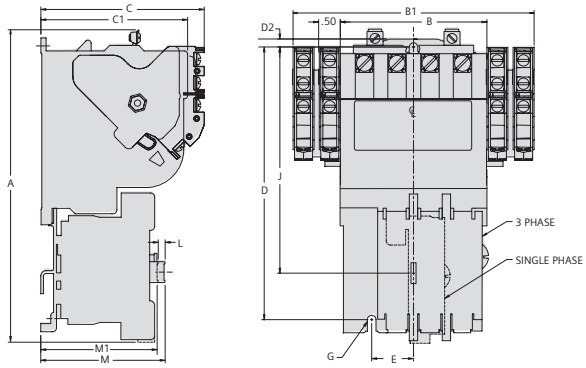

Figure 2

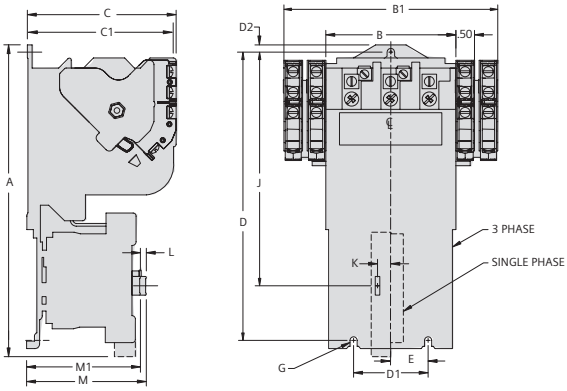

Figure 3

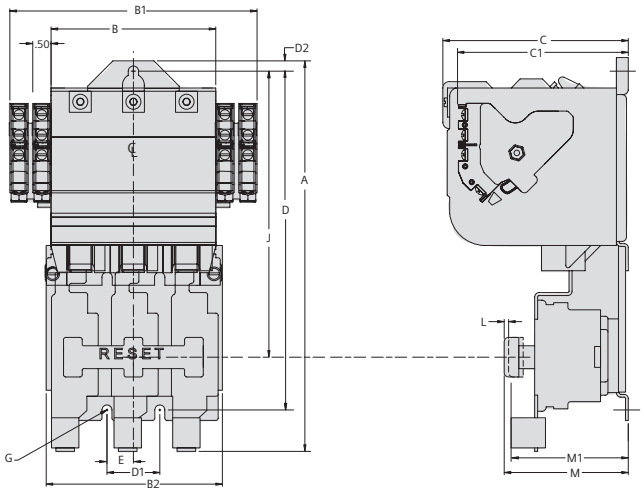

Figure 4

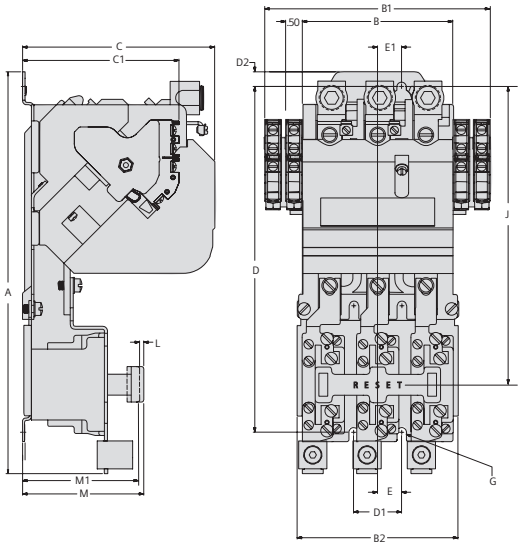

Open Type Ambient Compensated Bimetal Overload

Size	Figure	Outline Dimensions A	B	B1	C	C1	Mounting Dimensions D	D1	D2	E	E1	Mounting Screw G	Reset Dimensions J	K	L	M	M1
00–1¾	1	7.45 (189)	3.50 (89)	5.75 (146)	3.89 (99)	3.50 (89)	6.50 (165)	—	0.19 (4.8)	1.00 (25)	—	#10	5.39 (137)	—	0.16 (4)	2.97 (75)	2.81 (71)
2–2½	2	8.38 (213)	3.50 (89)	5.75 (146)	4.00 (102)	3.77 (96)	7.75 (197)	2.00 (51)	0.19 (4.8)	1.00 (25)	—	#10	6.28 (160)	0.36 (9)	0.16 (4)	3.22 (82)	3.06 (78)
3–3½	3	10.66 (271)	4.50 (114)	6.75 (171)	5.06 (129)	4.66 (118)	9.25 (235)	1.44 (37)	0.28 (7)	0.72 (18)	—	0.25 (6)	7.81 (198)	—	0.12 (3)	3.39 (86)	3.27 (83)
4	4	12.02 (305)	4.50 (114)	6.75 (171)	5.75 (146)	4.66 (118)	10.34 (263)	1.44 (37)	0.44 (11)	0.72 (18)	0.72 (18)	0.25 (6)	8.78 (223)	—	0.12 (3)	3.63 (92)	3.51 (89)

Note: Dimensions in inches (millimeters). Dimensions for reference, not for construction. Contact Sales Office for dimensions not listed.

Figure 1

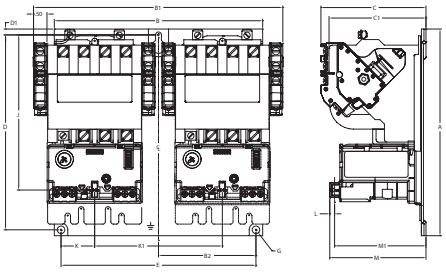

Figure 2

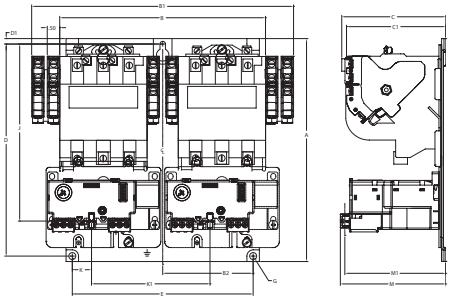

Figure 3

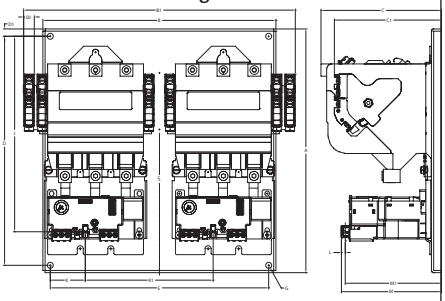

Figure 4

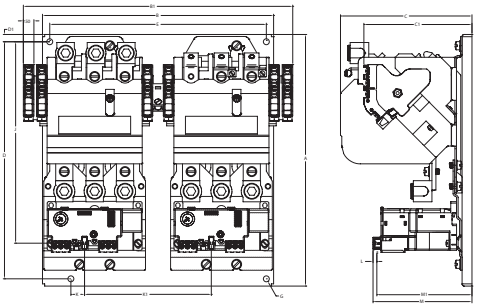

Figure 5

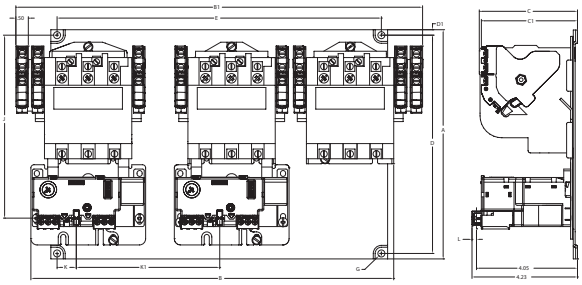

Figure 6

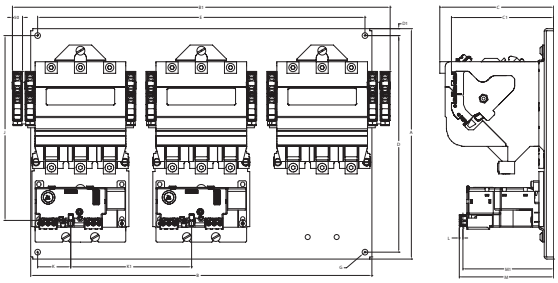

Figure 7

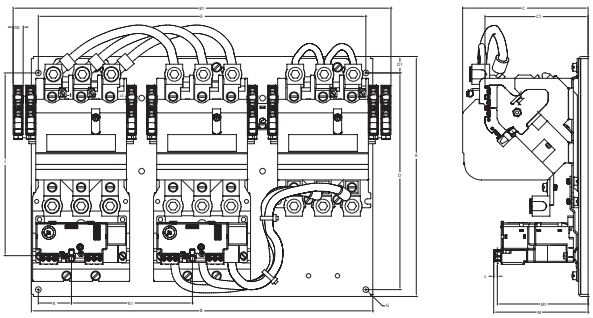

Class 22 Reversing & Class 30 2 Speed/2 Winding

Size	Figure	Outline Dimensions						Mounting Dimensions			Mounting Screw	Reset Dimensions					
		A	B	B1	B2	C	C1	D	D1	E	G	J	K	K1	L	M	M1
00–1¾	1	7.69	7.75	10.50	3.62	3.92	3.61	7.25	0.22	7.25	#10	5.77	1.25	4.75	0.18	3.58	3.40
2–2½	2	8.94	8.25	10.50	3.62	4.17	3.98	8.50	0.22	7.25	#10	7.10	0.77	4.75	0.18	4.23	4.05
3–3½	3	11.44	10.94	12.75	—	5.65	5.03	10.75	0.34	10.25	#10	9.18	1.64	6.00	0.18	4.69	4.51
4	4	11.91	10.94	12.75	—	6.22	5.12	11.22	0.34	10.25	0.25	9.53	0.65	6.00	0.18	4.68	4.50

Class 30 2 Speed/1 Winding

Size	Figure	Outline Dimensions						Mounting Dimensions			Mounting Screw	Reset Dimensions					
		A	B	B1	B2	C	C1	D	D1	E	G	J	K	K1	L	M	M1
00–1¾	1	7.69	7.75	10.50	3.62	3.92	3.61	7.25	0.22	7.25	#10	5.77	1.25	4.75	0.18	3.58	3.40
2–2½	5	9.19	14.55	16.30	—	3.94	3.85	8.75	0.22	13.00	#10	7.33	0.77	5.75	0.18	4.23	4.05
3–3½	6	11.44	16.94	18.75	—	5.65	5.07	10.75	0.34	16.25	#10	9.18	1.64	6.00	0.18	4.68	4.50
4	7	11.91	16.94	17.75	—	6.22	5.12	10.75	0.82	16.25	#10	9.06	1.64	6.00	0.18	4.68	4.50

Note: Dimensions for reference, not for construction.
Contact sales office for dimensions not listed.
Dimensions are in inches (mm).

Figure 1a

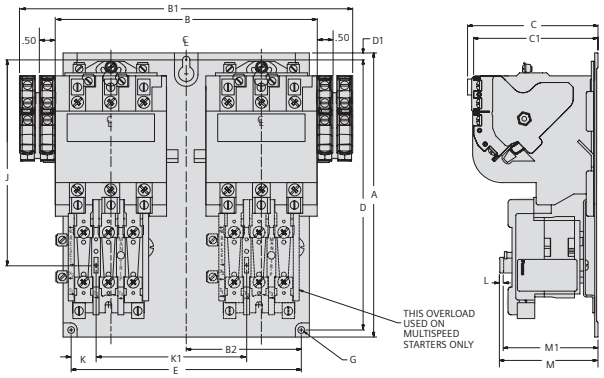

Figure 1b

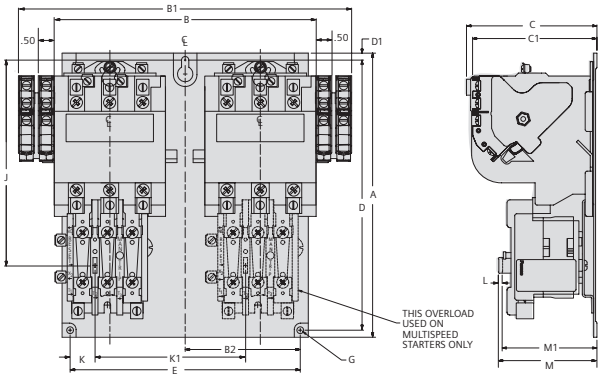

Figure 2

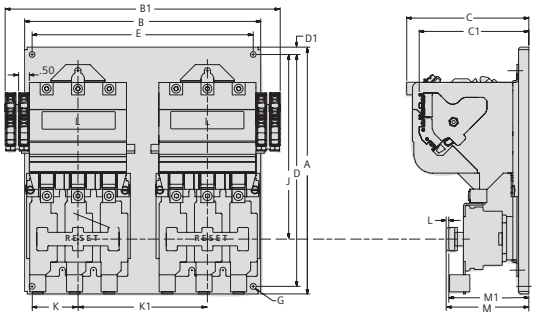

Figure 3

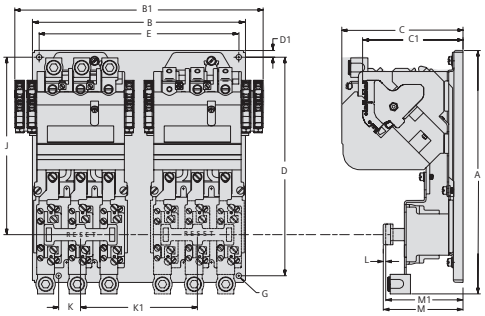

Figure 4

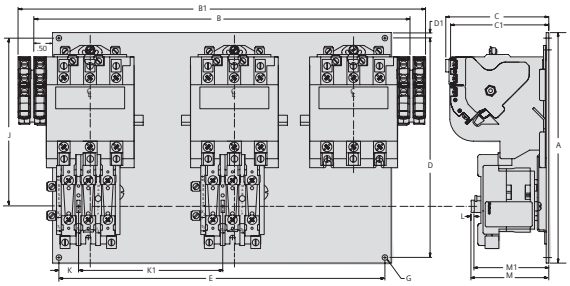

Figure 5

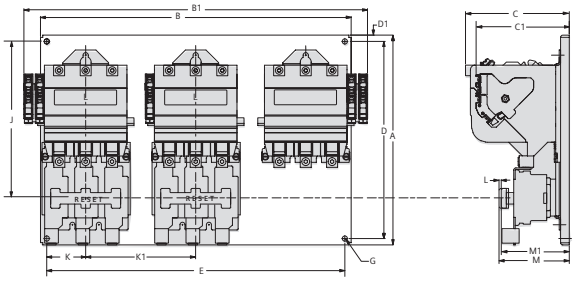

Class 22 Reversing & Class 30 2 Speed/2 Winding with Bimetal Overload

Size	Figure	Outline Dimensions						Mounting Screw			Mounting Dimensions	Reset Dimensions					
		A	B	B1	B2	C	C1	D	D1	E	G	J	K	K1	L	M	M1
00–1¾	1a	7.69	8.25	10.50	3.62	3.92	3.61	7.25	0.22	7.25	#10	5.60	1.25	4.75	0.16	3.12	3.07
2–2½	1b	8.94	8.25	10.50	3.62	4.17	3.98	8.50	0.22	7.25	#10	6.46	0.79	4.75	0.16	3.10	3.05
3–3½	2	11.44	10.94	12.94	—	5.66	5.08	10.75	0.34	10.25	#10	8.56	2.12	6.00	0.12	3.83	3.71
4	3	12.50	10.94	12.75	—	6.22	5.16	11.22	0.34	10.25	0.25	9.11	2.12	6.00	0.12	4.09	3.97

Class 30 2 Speed/1 Winding with Bimetal Overload

Size	Figure	Outline Dimensions						Mounting Screw			Mounting Dimensions	Reset Dimensions					
		A	B	B1	B2	C	C1	D	D1	E	G	J	K	K1	L	M	M1
00–1¾	1a	7.69	8.25	10.50	3.62	3.92	3.61	7.25	0.22	7.25	#10	5.60	1.25	4.75	0.16	3.12	3.07
2–2½	4	9.19	14.56	16.25	—	4.11	3.92	8.75	0.22	13.00	0.25	6.71	0.78	5.75	0.16	3.10	3.05
3–3½	5	11.44	16.94	18.75	—	5.66	5.08	10.75	0.34	16.25	0.25	8.56	2.12	6.00	0.12	3.83	3.71

Note: Dimensions for reference, not for construction.
Contact sales office for dimensions not listed.
Dimensions are in inches (mm).

Full Voltage Open Type NEMA Contactor Size 00-8

Figure 1

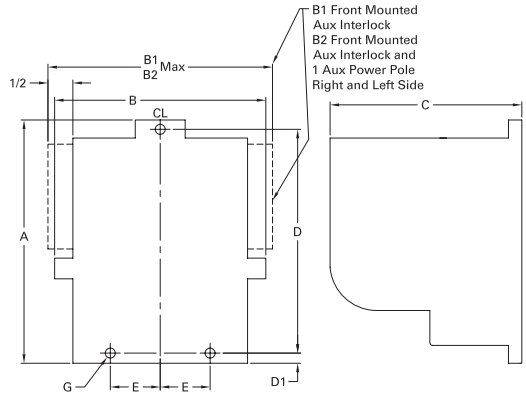

Figure 2

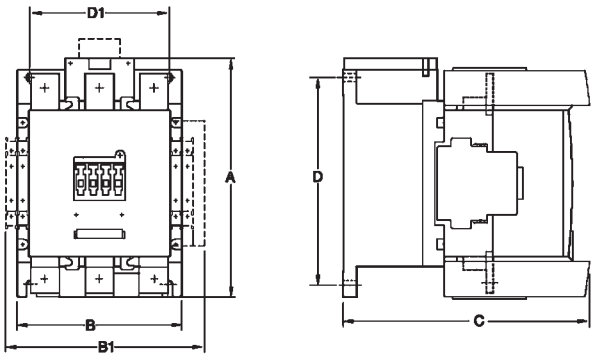

Figure 3

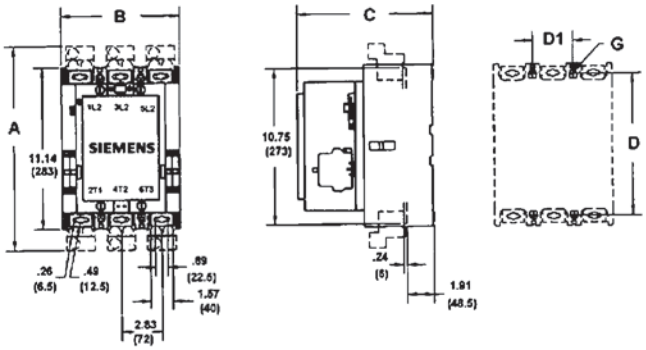

Figure 4

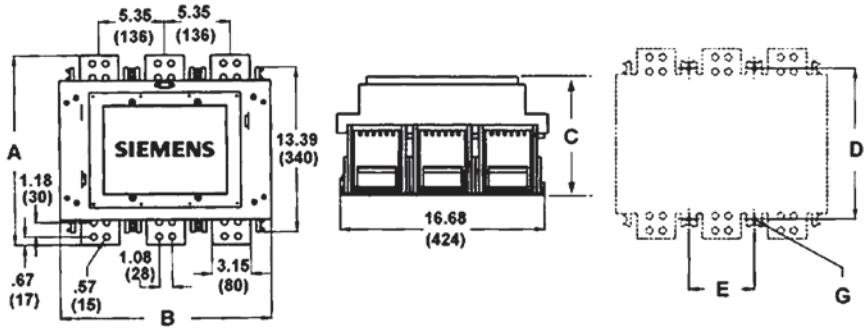

Open Type

Size	3rd Character of Catalog No.①	Outline Dimensions						Mounting Dimensions			Mounting Screw
		Fig	A	B	B1	B2	C	D	D1	E	G
00–1¾	C, D, E	1	4.31 (110)	3.94 (100)	4.25 (108)	4.75 (121)	3.75 (70)	3.94 (100)	0.19 (5)	1.00 (25)	#10
2–2½	F,G	1	4.88 (124)	3.94 (100)	4.25 (108)	—	4.00 (102)	4.50 (114)	0.19 (5)	1.00 (25)	#10
3–3½	H, I	1	6.13 (156)	5.13 (130)	5.50 (140)	—	5.06 (129)	5.63 (143)	0.25 (6)	0.75 (19)	0.25 (6)
4	J	1	7.81 (198)	5.19 (132)	5.50 (140)	—	5.75 (146)	6.56 (167)	0.81 (21)	0.75 (19)	0.5 (13)
5	L	2	8.27 (210)	5.71 (145)	6.89 (175)	—	8.54 (217)	7.09 (180)	4.72 (120)	—	0.35 (9)
6	M	2	8.43 (214)	6.3 (160)	7.48 (190)	—	9.29 (236)	7.09 (180)	5.12 (130)	—	0.35 (9)
7	N	3	14.05 (357)	8.27 (210)	—	—	9.53 (242)	9.80 (249)	2.83 (72)	—	0.25 (6)
8	P	4	15.41 (392)	17.23 (438)	—	—	10.56 (268)	12.28 (312)	—	5.35 (136)	0.35 (9)

Note: Dimensions for reference, not for construction. Contact sales office for dimensions not listed. Dimensions are in inches (mm).

① 3rd character of catalog number identifies contactor rating.

Figure 1

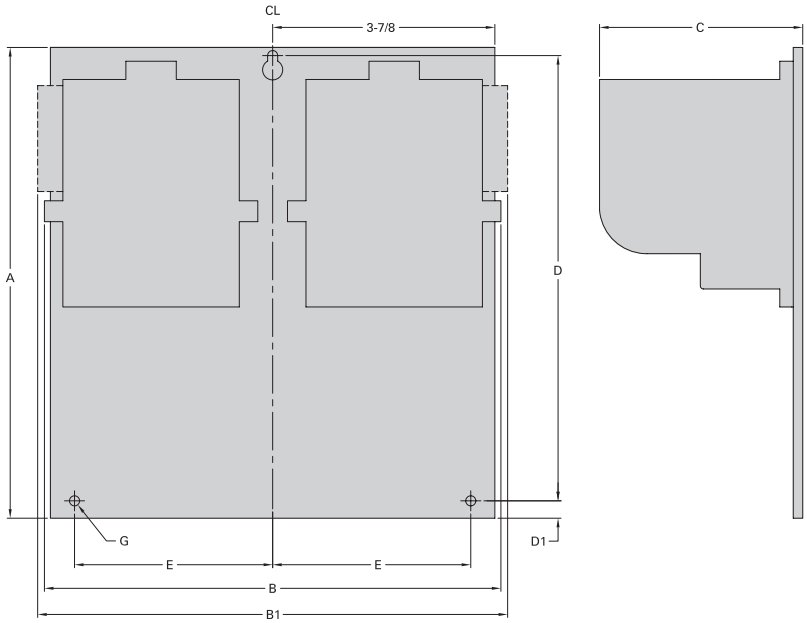

Figure 2

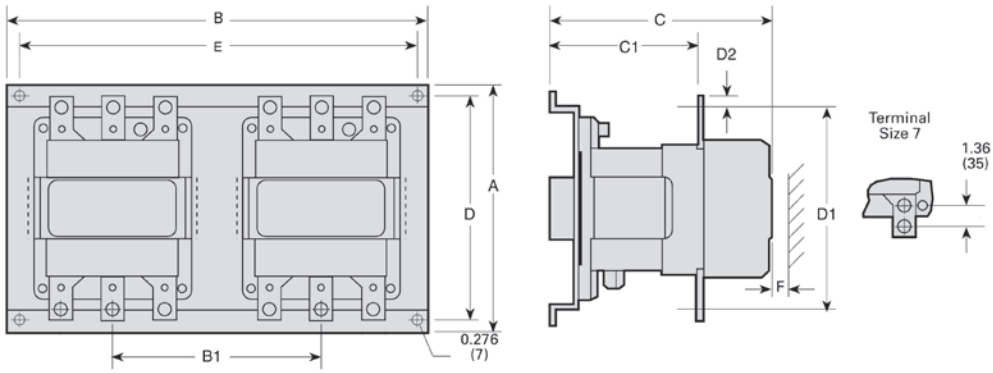

Open Type Horizontal Mounted

Size	Fig.	Outline Dimensions A	B	B1	C	C1	Mounting Dimensions D	D1	E	F	Mouning Screw G
00–1¾	1	7.69 (195)	7.75 (197)	9.25 (235)	3.88 (98)	—	7.25 (184)	0.25 (6)	3.63 (92)	—	#10
2, 2½	1	8.94 (227)	7.75 (197)	9.25 (235)	4.56 (116)	—	8.5 (216)	0.25 (6)	3.63 (92)	—	#10
3–3½	1	11.44 (291)	10.94 (278)	11.50 (292)	5.19 (132)	—	10.75 (273)	0.38 (6)	5.13 (130)	—	0.25
4	1	8.50 (216)	10.94 (278)	11.50 (292)	6.25 (159)	—	7.81 (198)	0.38 (6)	5.13 (130)	—	0.25
5	2	18.07 (459)	14.20 (361)	—	9.44 (240)	—	17.20 (437)	—	9.61 (244)		—
6	2	11.61 (295)	18.88 (480)	9.45 (240)	10.85 (276)	7.44 (189)	10.44 (265)	10.71 (272)	17.72 (450)	1.18 (30)	—

Note: Dimensions for reference, not for construction.
Contact sales office for dimensions not listed.
Dimensions are in inches (mm).

Dimensions "A" Frame—ESP200 Solid State Overload

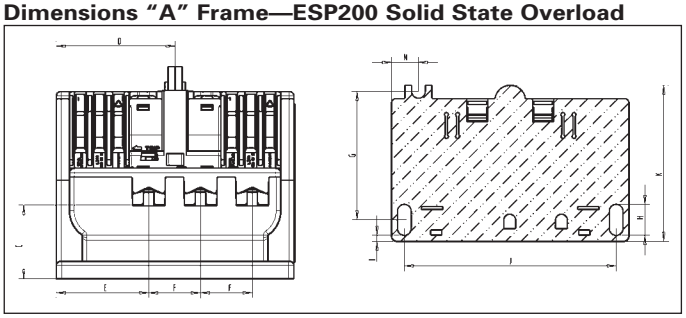

Dimensions "A1" Frame—ESP200 Solid State Overload

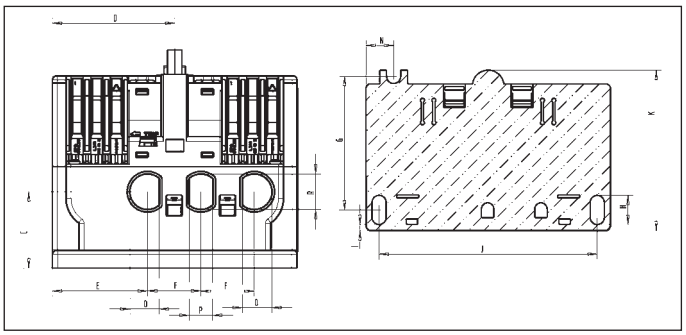

Dimensions "B" Frame—ESP200 Solid State Overload

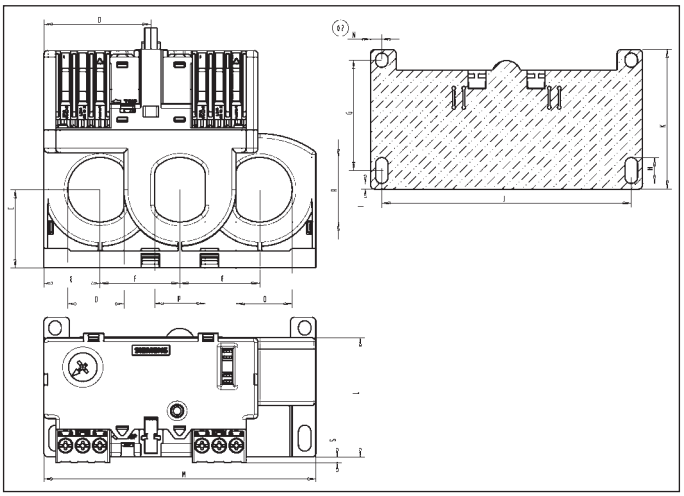

Current Transformers (all CT's have the same dimensions)

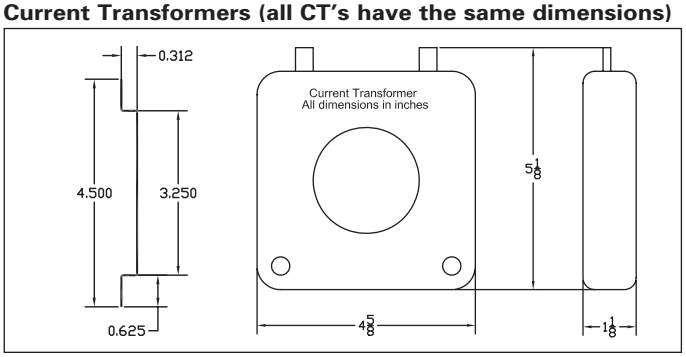

Overload (55 - 630 Amps), SIRIUS 3RB20

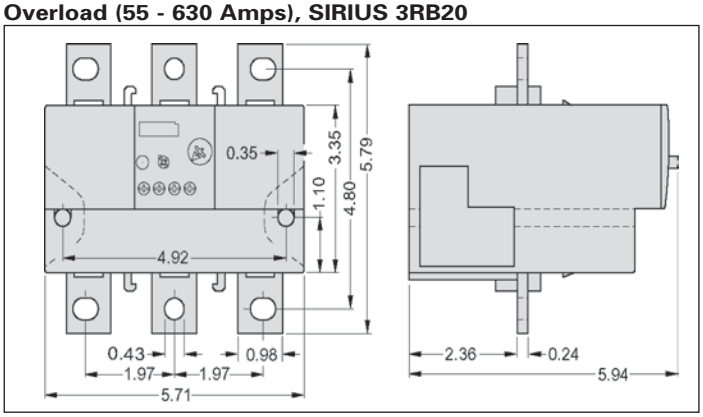

Dimensions	Frame Size A		Frame Size A1		Frame Size B	
	mm	in.	mm	in.	mm	in.
A	80	3.15	80	3.15	100.4	3.95
B	12.6	0.5	12.6	0.5	8.6	0.34
C	27.7	1.1	28	1.10	32.6	1.28
D	44.85	1.77	44.85	1.77	44.85	1.77
E	34.9	1.37	34.9	1.37	23.5	0.93
F	19.6	0.77	19.6	.077	33.5	1.32
G	48.95	1.93	48.95	1.93	46.23	1.82
H	10.7	0.42	10.7	0.42	10.9	0.43
I	2.3	0.09	2.3	0.09	2.4	0.09
J	80	3.15	80	3.15	104.6	4.12
K	53.9	2.12	53.9	2.12	58.6	2.31
L	66.0	2.6	55.9	2.20	50	1.97
M	89.7	3.53	89.7	3.53	114	4.49
N	10.18	0.40	10.18	0.40	4.7	0.19
O	—	—	10.77	0.42	23.6	0.93
P	—	—	8.62	0.34	21.1	0.83
R	—	—	12.9	0.51	27.1	1.07
S	9.5	0.37	—	—	2.45	0.1
T	5.2	0.21	5.2	0.21	5.2	0.21

Note: When mounted on a plate, torque screws to 11 lb.in. (1.2 Nm).

Figure 1

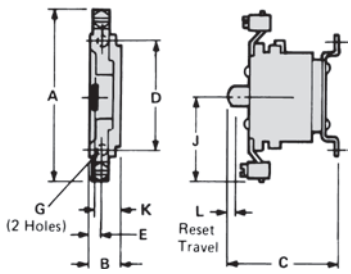

Figure 2

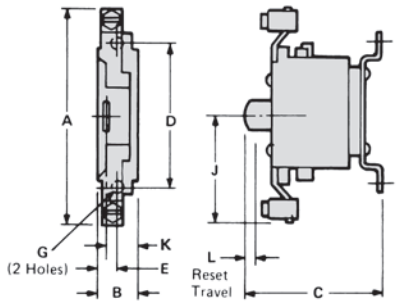

Figure 3

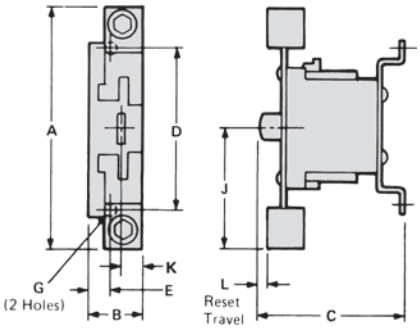

Figure 4

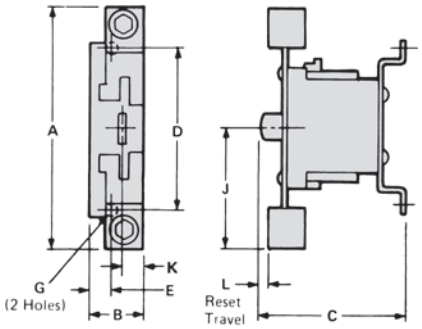

Figure 5

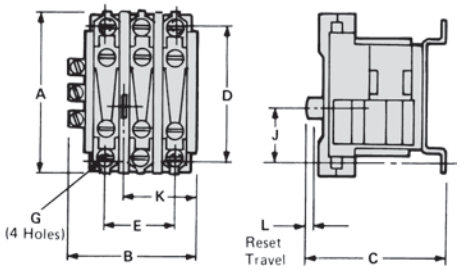

Figure 6

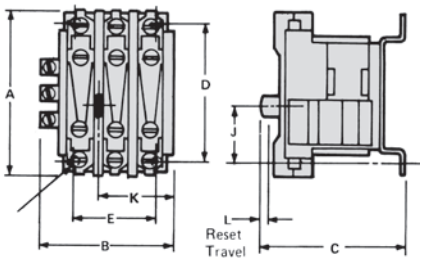

Figure 7

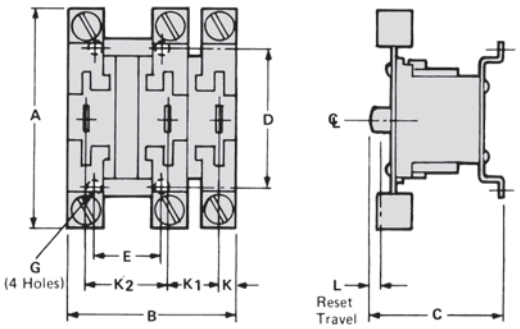

Figure 8

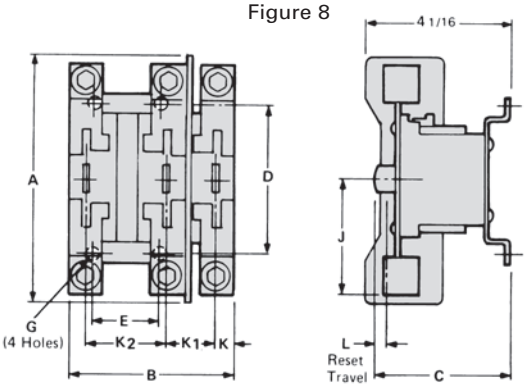

Description	Amp Rating	Fig	Outline Dimensions A	Outline Dimensions B	Outline Dimensions C	Mounting Dimensions D	Mounting Dimensions E	Reset Dimensions J	Reset Dimensions K	Reset Dimensions L	Mounting Screw G	Max Wire Size	Approx Ship Wt Lbs (Kg)	Ref Dwg
1-Pole	25	1	3½ (89)	⅞ (22)	3³⁄₁₆ (81)	3 (76)	½ (13)	1¾ (44)	¾ (19)	⅛ (3)	#10	8	2 (1)	D51820
Bimetal	60	2	4⅞ (124)	⅞ (22)	3³⁄₁₆ (81)	3 (76)	½ (13)	2⁷⁄₁₆	¾ (19)	⅛ (3)	#10	1	2 (1)	D51830
Ambient	100	3	4⅞ (124)	1¼ (32)	3⁹⁄₁₆ (90)	3½ (89)	⁹⁄₁₆ (14)	2⁷⁄₁₆	½ (13)	⅛ (3)	#10	00	3 (1)	D51833
Compensated	180	4	5¹⁵⁄₁₆ (151)	1¼ (32)	3⁹⁄₁₆ (90)	3½ (89)	⁹⁄₁₆ (14)	3 (76)	½ (13)	⅛ (3)	#10	250 MCM	4 (2)	D52206

Description	Amp Rating	Fig	Outline Dimensions A	Outline Dimensions B	Outline Dimensions C	Mounting Dimensions D	Mounting Dimensions E	Reset Dimensions J	Reset Dimensions K	Reset Dimensions K1	Reset Dimensions K2	Reset Dimensions L	Mtg Screw G	Max Wire Size	Approx Ship Wt Lbs (Kg)	Ref Dwg
3-Pole	30	5	3⅝ (92)	3¹⁄₁₆ (78)	3⅛ (79)	3 (76)	1½ (38)	1¼ (32)	1¹³⁄₁₆ (46)	—	—	³⁄₁₆ (5)	#10	8	3 (1)	D54791
Bimetal	60	6	3⅞ (98)	3¹⁄₁₆ (78)	3⅛ (79)	3 (76)	1½ (38)	1¼ (32)	1¹³⁄₁₆ (46)	—	—	³⁄₁₆ (5)	#10	2	3 (1)	D54823
Ambient	100	7	4⅞ (124)	4⁷⁄₁₆ (113)	3⁹⁄₁₆ (90)	3½ (89)	1⅝ (41)	2⁷⁄₁₆ (62)	⁹⁄₁₆ (14)	1¹⁵⁄₁₆ (49)	2 (51)	⅛ (3)	#10	00	4 (2)	D51868
Compensated	180	8	6½ (165)	4⁷⁄₁₆ (113)	3⁹⁄₁₆ (90)	3½ (89)	1⅝ (41)	3 (76)	⁹⁄₁₆ (14)	1¹⁵⁄₁₆ (49)	2 (51)	⅛ (3)	#10	250 MCM	5 (2)	D52038

Note: Dimensions for reference, not for construction.
Dimensions in inches (mm).

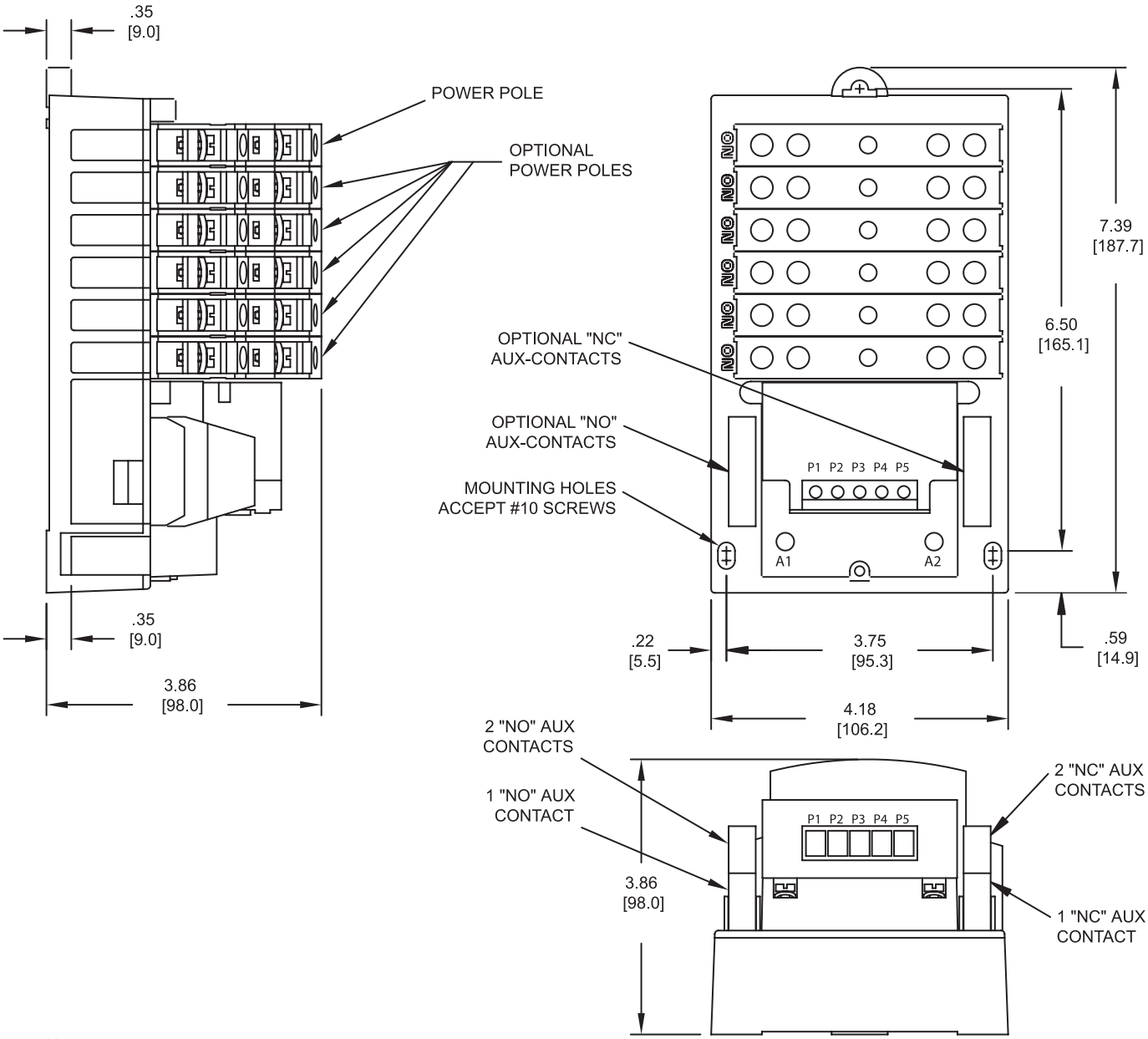

Note:

1) Mounting Dimensions remain the same for 1 to 12 Poles

2) Line and Load terminals are inter-changeable

3) Up to 2NO and 2NC auxiliary contacts can be added onto the base product

4) Same Power Pole can be configured as NO type or NC type

LEN00B (20A 3 Pole and 4 Pole)

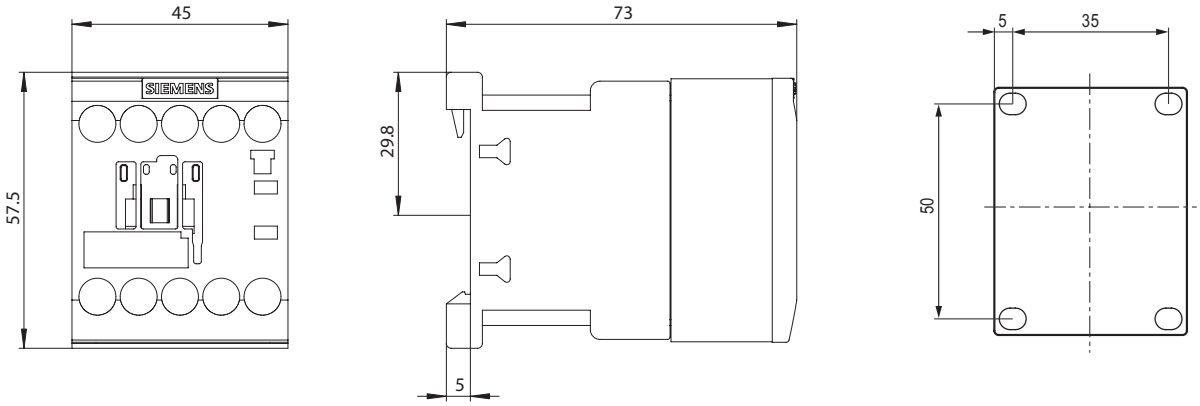

LEN00C003 (30A 3 Pole)

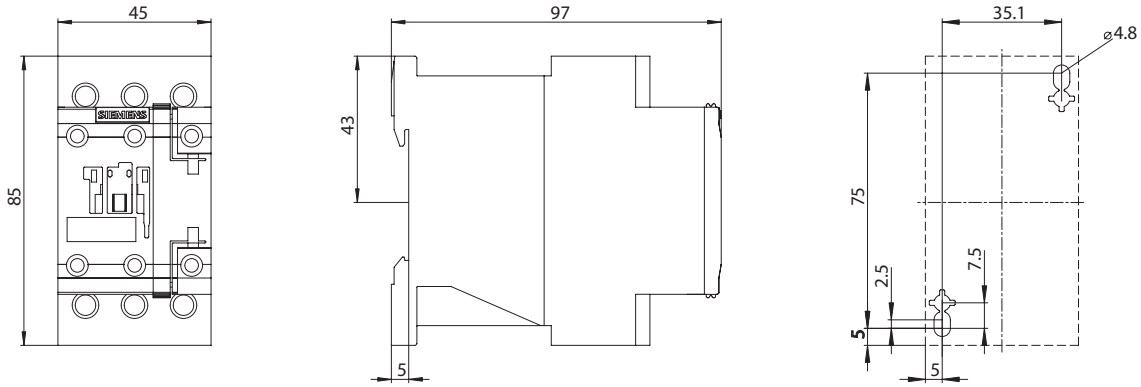

LEN00C004 (30A 4 Pole)

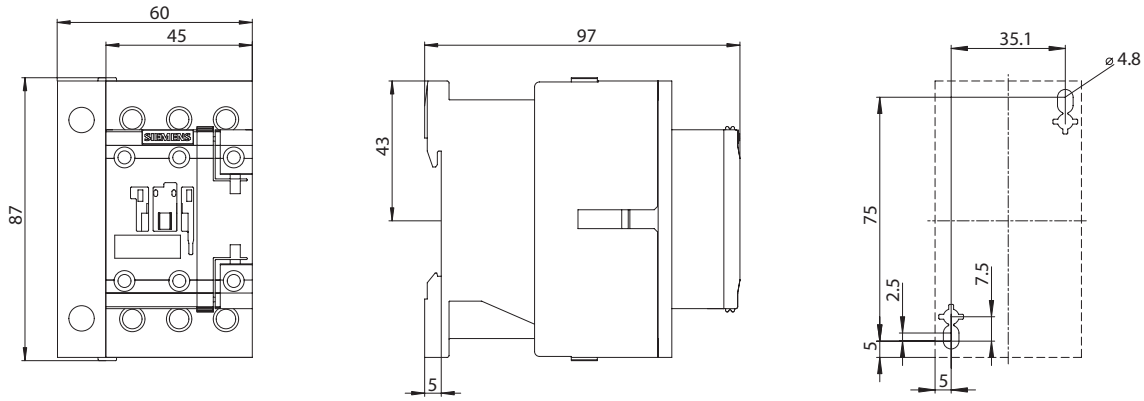

LEN00D003 (60A 3 Pole)

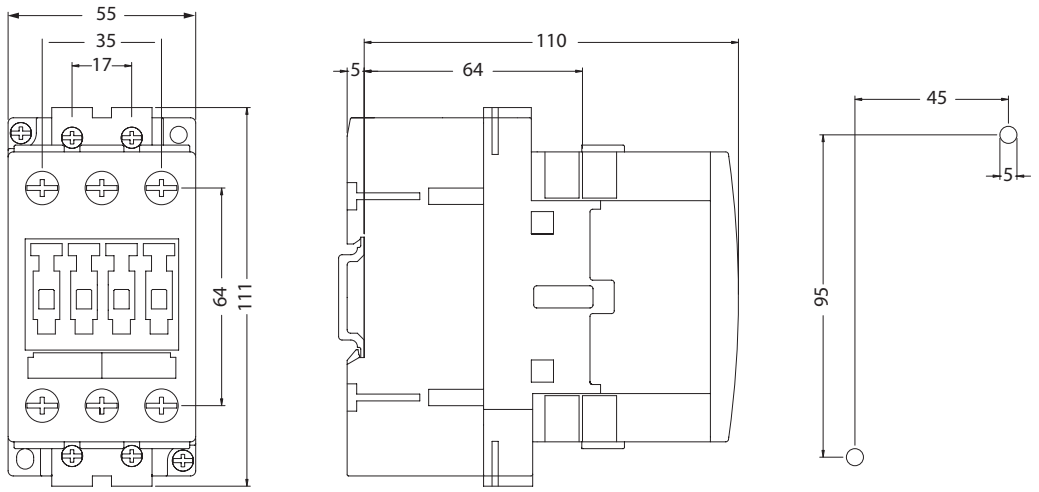

LEN00E003 (100A 3 Pole)

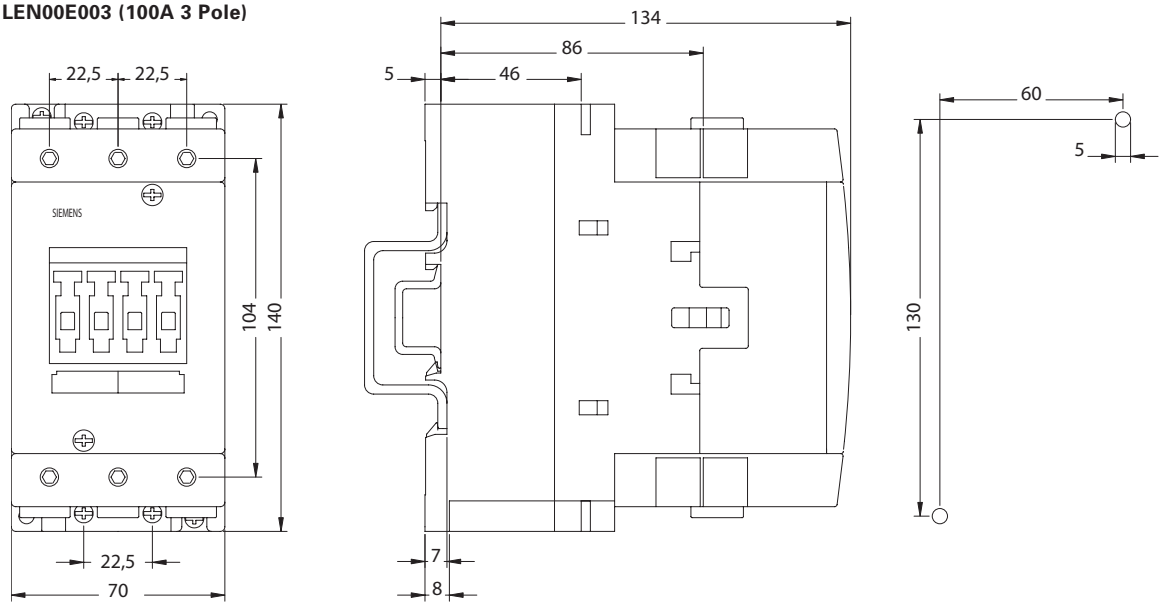

LEN00C006 (30A 6 Pole)

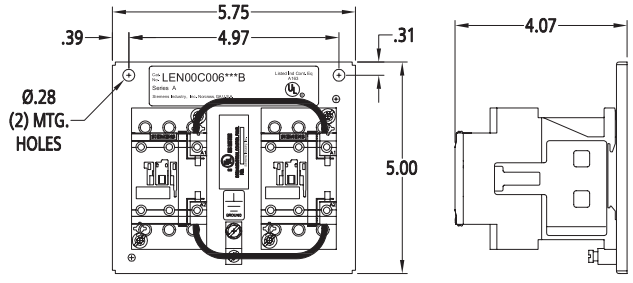

LEN00D006 (60A 6 Pole)

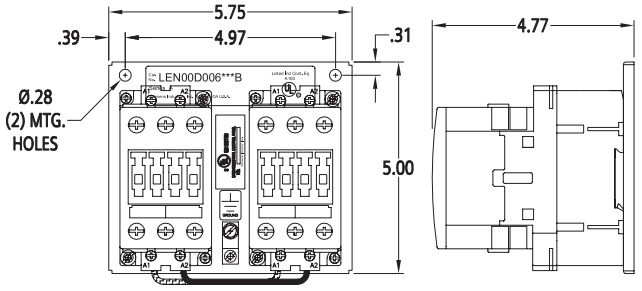

LEN00C009 (30A 9 Pole)

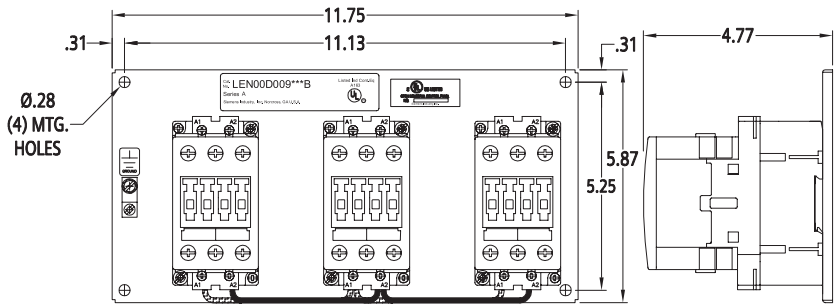

LEN00D009 (60A 9 Pole)

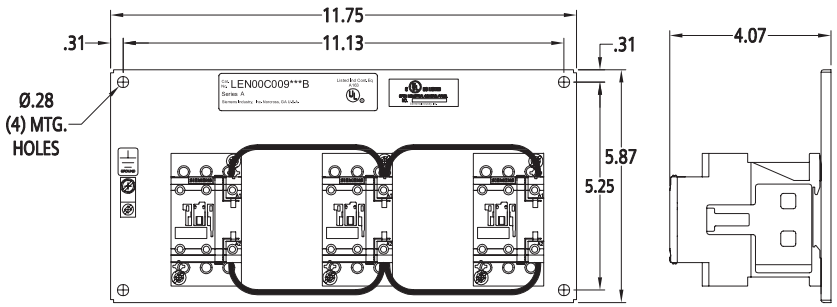

LEN00C012 (30A 12 Pole)

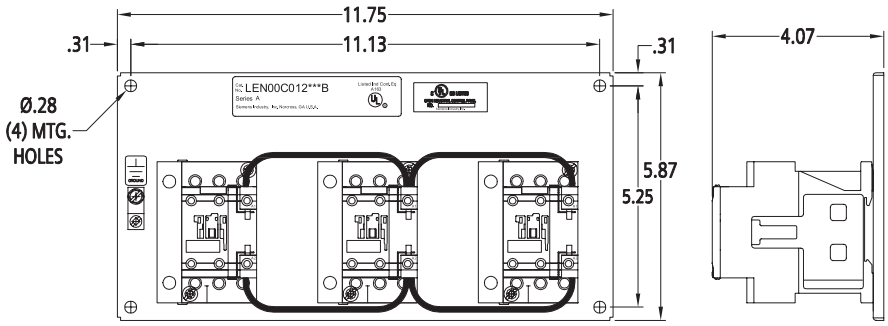

LEN00D012 (60A 12 Pole)

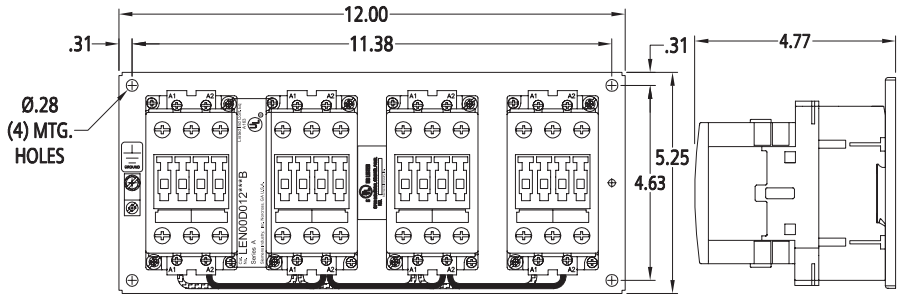

LEN00F003 (200A 3 Pole)

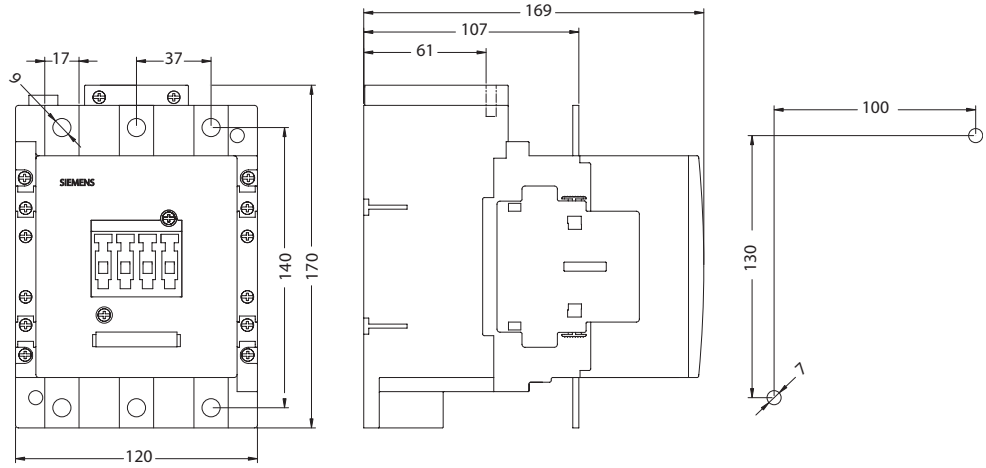

LEN00G003 (300A 3 Pole)

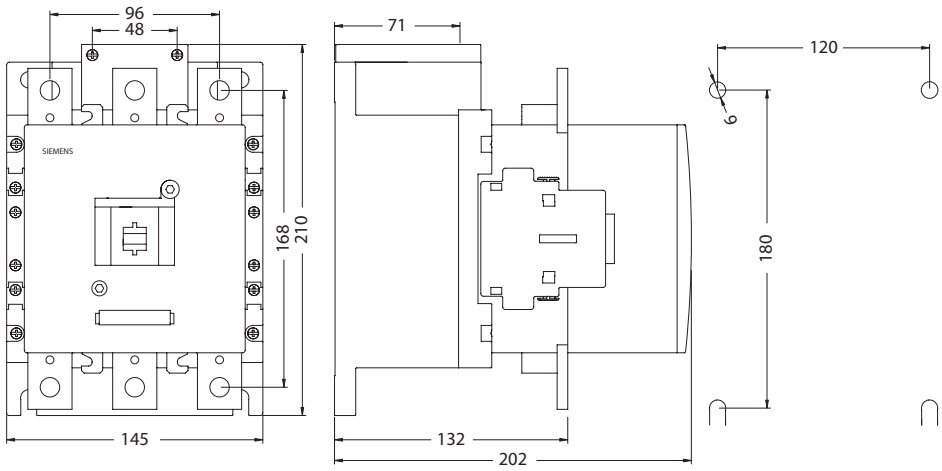

LEN00H003 (400A 3 Pole)

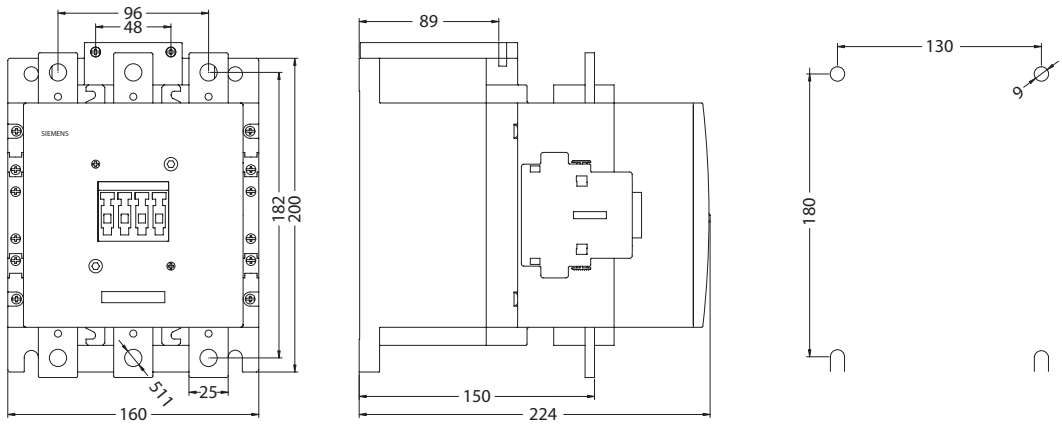

CLM Contactor, 20 Amp

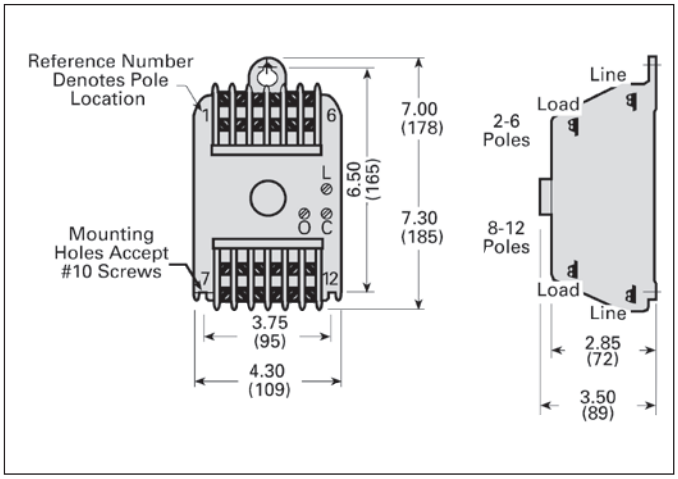

Figure 1

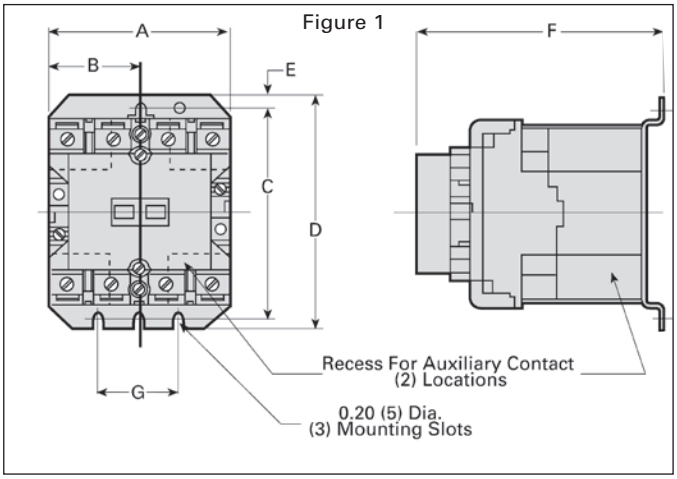

Figure 2

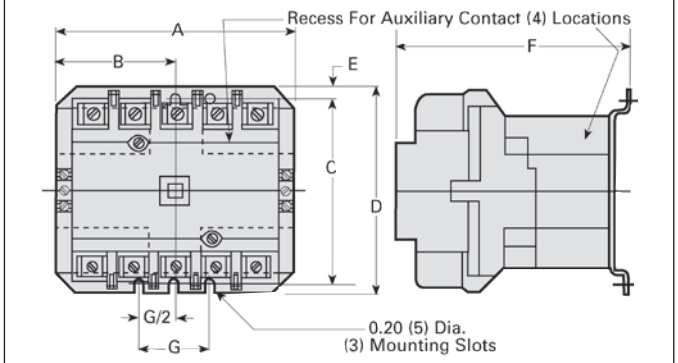

Figure 3

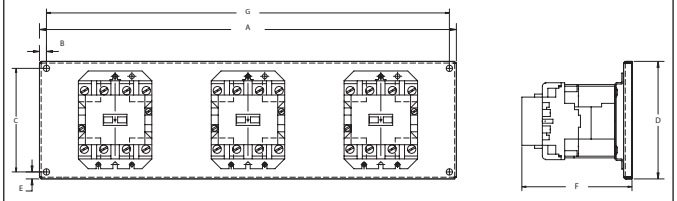

Figure is representative and may not depict the actual number of contactors mounted on the plate. There will be either 2 or 3 contactors. Furthermore, each contactor may have 3, 4 or 5 poles.

Open Type Lighting and Heating Contactors

Class	Figure Number	Amp Rating	Number of Poles	A	B	C	D	E	F	G
CLM	1	30	2–4	3.31 (84)	1.65 (42)	3.95 (100)	4.38 (111)	0.23 (6)	4.61 (117)	1.50 (38)
		30	5	4.19 (106)	2.09 (53)	3.95 (100)	4.38 (111)	0.23 (6)	4.61 (117)	1.50 (38)
	2	60	2, 3	3.31 (84)	1.65 (42)	3.95 (100)	4.38 (111)	0.23 (6)	4.94 (125)	1.50 (38)
		60	4, 5	5.06 (129)	2.53 (64)	3.95 (100)	4.38 (111)	0.23 (6)	4.94 (125)	1.50 (38)
		100	2, 3	4.62 (117)	2.31 (59)	6.00 (152)	6.62 (168)	0.38 (10)	6.75 (171)	1.88 (48)
		100	4, 5	7.25 (184)	3.62 (92)	6.00 (152)	6.62 (168)	0.38 (10)	6.75 (171)	1.88 (48)
		200	2, 3	4.62 (117)	2.31 (59)	6.00 (152)	6.62 (168)	0.38 (10)	6.75 (171)	1.88 (48)
		200	4, 5	7.25 (184)	3.62 (92)	6.00 (152)	6.62 (168)	0.38 (10)	6.75 (171)	1.88 (48)
	3	30	6, 8	8.00 (196)	0.31 (8)	5.25 (129)	5.87 (144)	0.31 (8)	4.86 (119)	7.38 (181)
		30	9, 10, 12	11.75 (289)	0.31 (8)	5.25 (129)	5.87 (144)	0.31 (8)	4.86 (119)	11.13 (273)
		60	6	8.00 (196)	0.31 (8)	5.25 (129)	5.87 (144)	0.31 (8)	5.19 (127)	7.38 (181)
		60	8, 9, 10	11.75 (289)	0.31 (8)	5.25 (129)	5.87 (144)	0.31 (8)	5.19 (127)	11.13 (273)
		60	12	16.75 (410)	0.31 (8)	5.25 (129)	5.87 (144)	0.31 (8)	5.19 (127)	16.13 (395)

Note: Dimensions for reference, not for construction.
Dimensions in inches (mm).

CLM Contactors 300 Amp

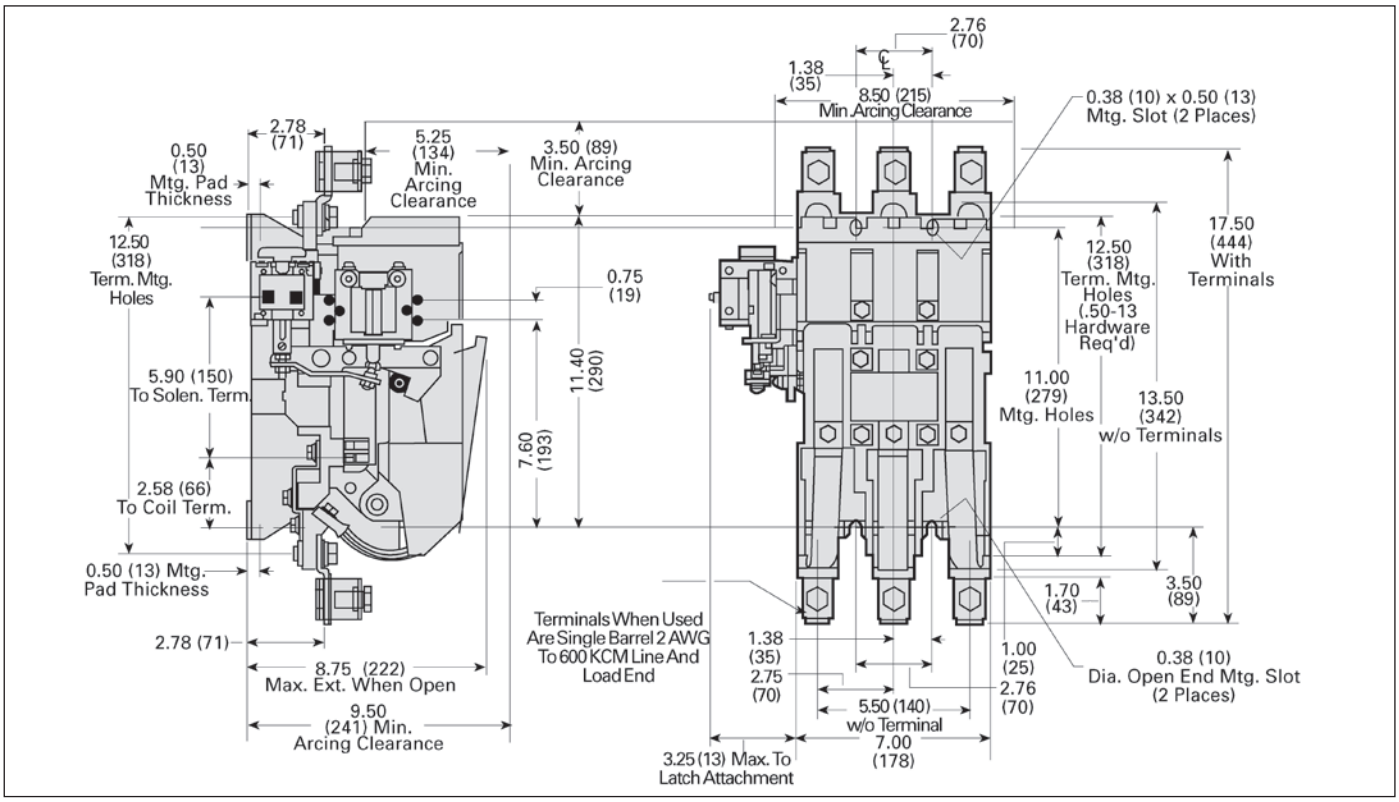

CLM Contactors 400 Amp

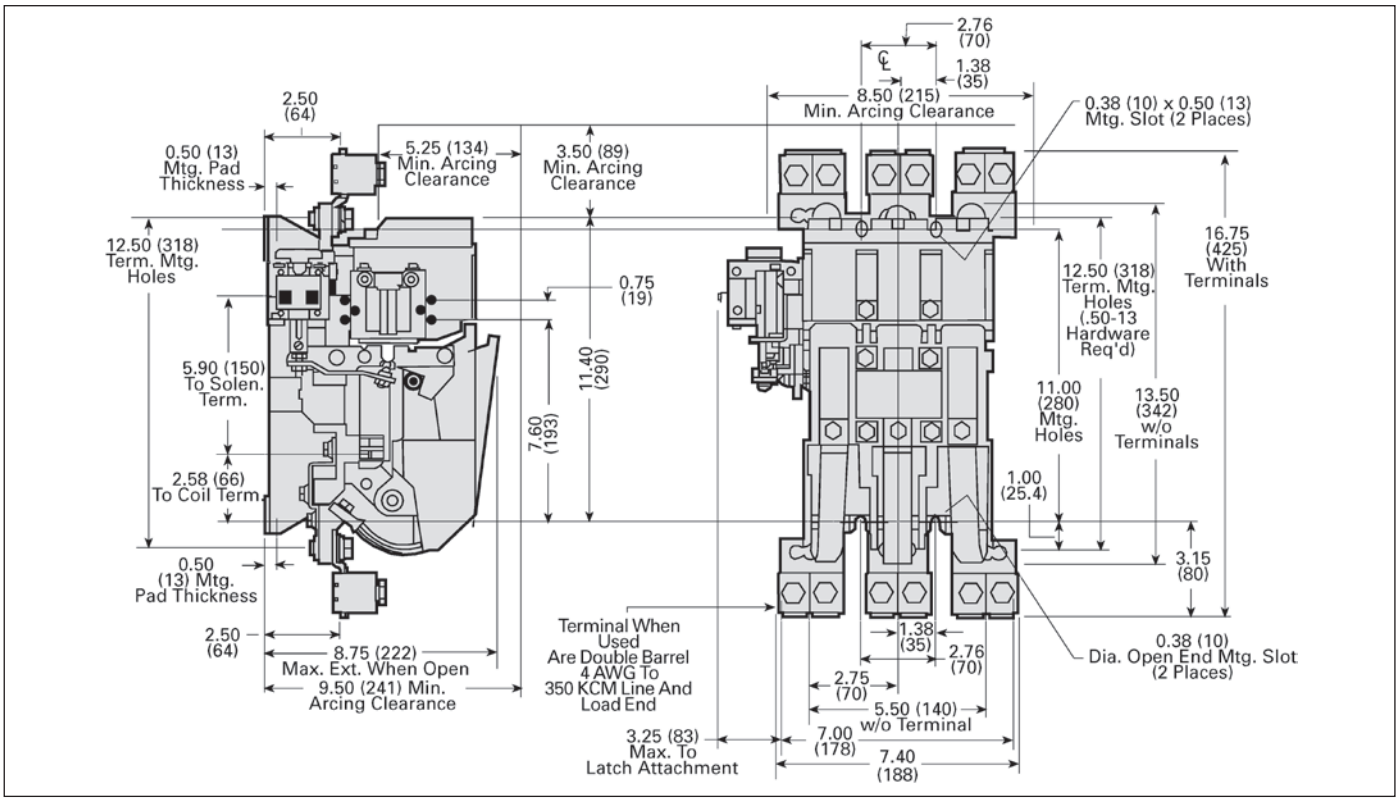

Note: Dimensions for reference, not for construction.
Dimensions in inches (mm).

For the latest CAD or PDF dimension drawings, look on our website at http://www.industry.usa.siemens.com/automation/us/en/industrial-controls/products/control-circuit-components/control-power-transformers/Pages/dimensional-drawings.aspx

For the latest CAD or PDF dimension drawings, look on our website at http://www.industry.usa.siemens.com/automation/us/en/industrial-controls/products/control-circuit-components/control-power-transformers/Pages/dimensional-drawings.aspx

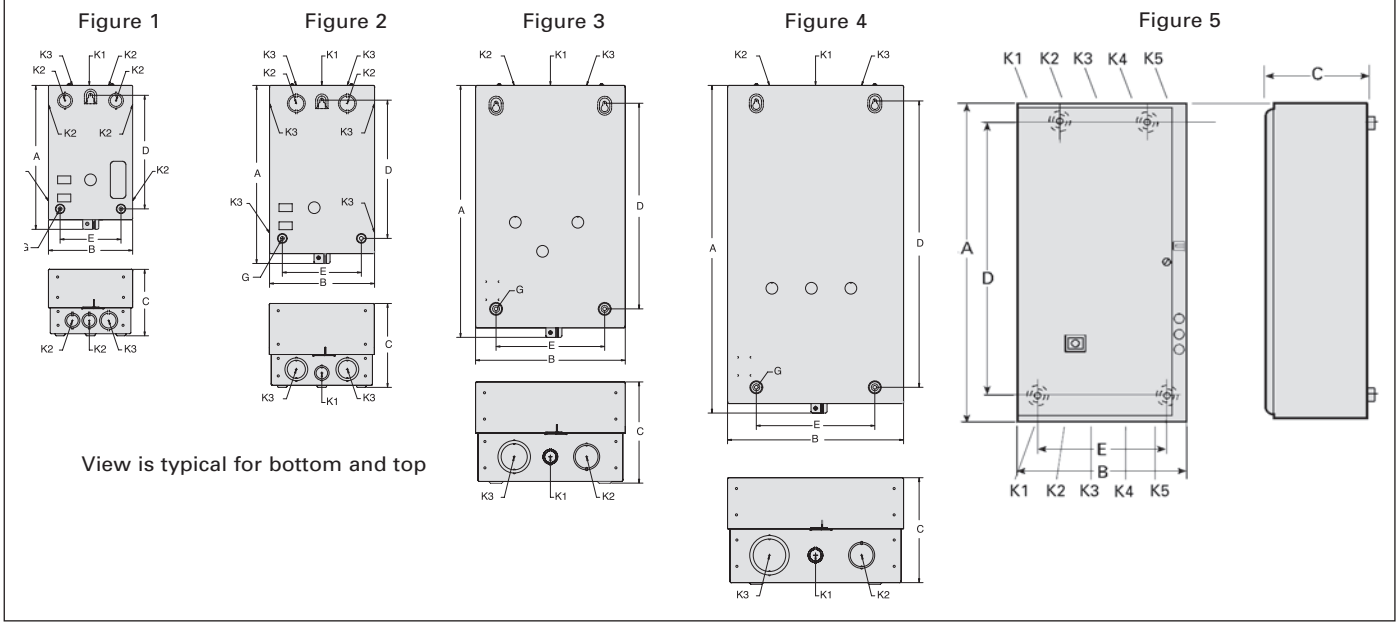

NEMA 1 General Purpose Enclosure (Standard width for use with or without CPT)①

Size	Max CPT Size	Figure	Outline Dimensions A	Outline Dimensions B	Outline Dimensions C	Mounting Dimensions D	Mounting Dimensions E	Mounting Screw G	Conduit Size K1	Conduit Size K2	Conduit Size K3	Conduit Size K4	Conduit Size K5	Approx Ship Wt Lbs (Kg)	Ref Dwg
00–1¾	w/o CPT	1	10 31/32 (279)	6 13/32 (163)	5 1/32 (128)	8 7/32 (209)	4⅝ (117)	¼	½	½–¾	¾–1	—	—	10 (5)	D68870
2–2½	w/o CPT	2	13 17/32 (344)	7 31/32 (202)	6⅜ (162)	10¼ (260)	6 (152)	¼	½–¾	¾–1	1–1¼	—	—	15 (7)	D68870
3–3½	(100VA)	3	19⅛ (486)	11⅜ (289)	7 11/16 (195)	15⅝ (397)	8¼ (210)	¼	½–¾	1–1¼	1½–2	—	—	26 (12)	D68870
4	(300VA)	4	24⅞ (632)	13⅜ (340)	8⅛ (206)	21¾ (552)	9 (229)	¼	½–¾	1¼–1½	2–2½	—	—	37 (17)	D68870
5	(300VA)	5	40 (1016)	20 (508)	11 (279)	37⅝ (956)	15¼ (387)	¼	2–3	1¼–1½	½–¾	1¼–1½	2–3	135 (36)	D65608
6, 7	(300VA)	5	48 (1219)	20 (508)	12½ (317)	45 3/16 (1148)	10 (254)	¼	2–2½	1¼–1½	½–¾	1¼–1½	2–2½	150 (44)	D65608013
8		5	79 (2010)	22 (559)	13 (330)	78 (1981)	18 (457)							275 (125)	D56032006

NEMA 1 General Purpose Enclosure (Extra wide for use with CPT)①

Size	Max CPT Size	Figure	Outline Dimensions A	Outline Dimensions B	Outline Dimensions C	Mounting Dimensions D	Mounting Dimensions E	Mounting Screw G	Conduit Size K1	Conduit Size K2	Conduit Size K3	Conduit Size K4	Conduit Size K5	Approx Ship Wt Lbs (Kg)	Ref Dwg
00–1¾	(200VA)	3	19⅛ (486)	11⅜ (289)	7 11/16 (195)	15⅝ (397)	8¼ (210)	¼	½–¾	1–1¼	1½–2	—	—	26 (12)	D68870
2–2½	(200VA)	3	19⅛ (486)	11⅜ (289)	7 11/16 (195)	15⅝ (397)	8¼ (210)	¼	½–¾	1–1¼	1½–2	—	—	26 (12)	D68870
3–3½	(250VA)	4	24⅛ (632)	13⅜ (340)	8⅛ (206)	21¾ (552)	9 (229)	¼	½–¾	1–1¼–1½	2–2½	—	—	37 (17)	D68870

Note: Dimensions in inches (millimeters). Dimensions for reference, not for construction. Contact Sales Office for dimensions not listed.

① Clamshell enclosure Size 00 - 4; Standard width and Extra wide.

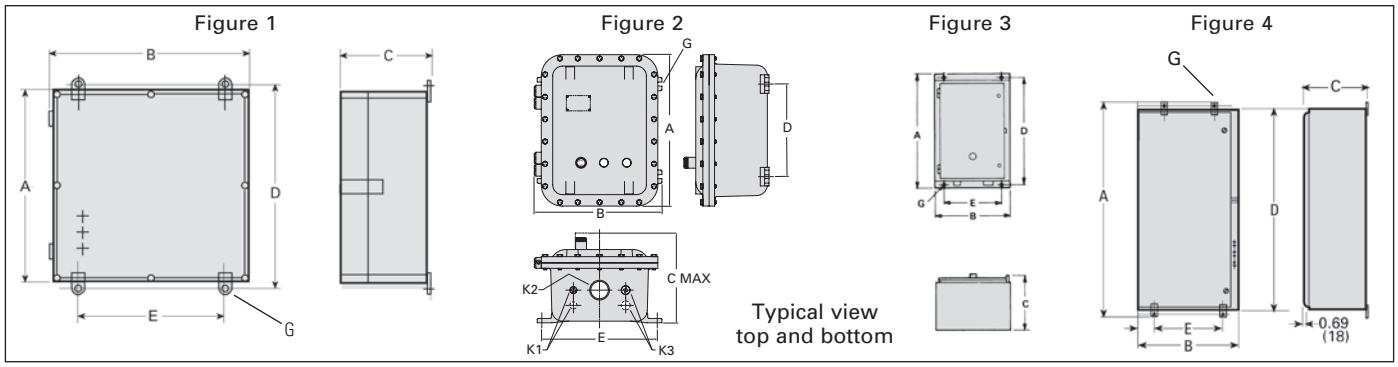

NEMA 4X Fiberglass Enclosures (Standard width for use with or without CPT)

Size	Figure	Outline Dimensions A	B	C	Mounting Dimensions D	E	Mtg Screw G	Conduit Size K1	K2	K3	Approx Ship Wt Lbs (Kg)	Ref Dwg
0–2½	1	14.620 (371)	11.880 (302)	6.890 (175)	15.000 (381)	9.750 (248)	¼	—	—	—	11 (4.9)	24-139-861-001
3–4	1	23.780 (604)	23.780 (604)	6.890 (175)	24.125 (612.7)	21.250 (539.7)	¼	—	—	—	28 (12.7)	24-139-861-003

NEMA 7/9/3/4 Hazardous Location Enclosure (Standard width for use with or without CPT)

Size	Figure	Outline Dimensions A	B	C	Mounting Dimensions D	E	Mtg Screw G	Conduit Size K1	K2	K3	Approx Ship Wt Lbs (Kg)	Ref Dwg
0–1¾ w/o CPT	2	15.250 (387)	10.688 (272)	10.000 (254)	8.500 (216)	9.125 (132)	⅜	½	1½	¾	33 (14.9)	24-139-865-002
2–2½ (0–1¾ w/ CPT)	2	17.750 (451)	14.688 (373)	10.375 (264)	10.625 (270)	13.250 (337)	⅜	½	2	¾	60 (27.0)	24-139-865-003
3	2	17.750 (451)	14.688 (373)	10.375 (264)	10.625 (270)	13.250 (337)	⅜	½	2	¾	60 (27.0)	24-139-865-003
3½–4	2	28.688 (729)	17.750 (451)	11.750 (298)	18.375 (467)	15.750 (400)	½	½	3	¾	140 (63.5)	24-139-865-004
5	2	48.875 (1038)	22.875 (581)	14 7/8 (377)	29 (373)	21⅛ (533)	⅝	½	3	¾	352 (159)	24-139-865-006

NEMA 7/9/3/4 Hazardous Location Enclosure (Extra wide for use with CPT)

Size	Figure	Outline Dimensions A	B	C	Mounting Dimensions D	E	Mtg Screw G	Conduit Size K1	K2	K3	Approx Ship Wt Lbs (Kg)	Ref Dwg
0–2½ ①	2	17.750 (451)	14.688 (373)	10.375 (264)	10.625 (270)	13.250 (337)	⅜	½	2	¾	60 (27.0)	24-139-865-003

NEMA 12/3/3R Industrial Use Enclosure (Standard width for use without CPT)

Size	Figure	Outline Dimensions A	B	C	Mounting Dimensions D	E	Mtg Screw G	Conduit Size K1	K2	K3	Approx Ship Wt Lbs (Kg)	Ref Dwg
0–1¾	3	13.000 (330)	7.750 (197)	5.438 (138)	12.250 (311)	5.000 (127)	¼	—	—	—	12 (5)	D41547
2–2½	3	16.000 (406)	8.125 (206)	6.063 (154)	15.250 (387)	5.000 (127)	¼	—	—	—	18 (8)	D41547
3–4	3	26.000 (660)	13.125 (333)	7.563 (192)	25.250 (641)	10.000 (254)	¼	—	—	—	49 (22)	D41552

NEMA 12/3/3R Industrial Use Enclosure (Extra wide for use with CPT)

Size	Figure	Outline Dimensions A	B	C	Mounting Dimensions D	E	Mtg Screw G	Conduit Size K1	K2	K3	Approx Ship Wt Lbs (Kg)	Ref Dwg
0–1¾	3	13.000 (330)	12.625 (321)	5.375 (137)	12.250 (311)	10.000 (254)	¼	—	—	—	30 (14)	D17150
2–2 ½	3	16.000 (406)	13.250 (337)	6.125 (156)	15.250 (387)	11.000 (279)	¼	—	—	—	33 (15)	D17150
3–3 ½	3	26.000 (660)	13.125 (333)	7.563 (192)	25.250 (641)	10.000 (254)	¼	—	—	—	49 (22)	D41552
4	3	29.063 (738)	23.188 (589)	9.250 (235)	27.563 (700)	20.000 (508)	⅜	—	—	—	64 (29)	D17150
5	4	40.000 (1016)	20.000 (508)	11.000 (279)	41.000 (1041)	10.000 (254)	⅜	—	—	—		D65608007
6, 7	4	48.000 (1219)	20.000 (508)	12.500 (317)	49.000 (1244)	10.000 (254)	⅜	—	—	—		D65608009
8	5	79.000 (2010)	22.000 (559)	13.000 (330)	78.000 (1981)	18.000 (457)	⅜	—	—	—	275 (125)	D65632006

NEMA 4/4X Stainless Steel Enclosure (Standard width for use without CPT)

Size	Figure	Outline Dimensions A	B	C	Mounting Dimensions D	E	Mtg Screw G	Conduit Size K1	K2	K3	Approx Ship Wt Lbs (Kg)	Ref Dwg
0–1¾	3	13.000 (330)	7.750 (197)	5.438 (138)	12.250 (311)	5.000 (127)	¼	—	—	—	17.5 (8)	D41546
2–2½	3	16.000 (406)	8.125 (206)	6.063 (154)	15.250 (387)	5.000 (127)	¼	—	—	—	36 (16)	D41546
3–4	3	26.000 (660)	13.125 (333)	7.563 (192)	25.250 (641)	10.000 (254)	¼	—	—	—	67 (30)	D41551

NEMA 4/4X Stainless Steel Enclosure (Extra wide for use with CPT)

Size	Figure	Outline Dimensions A	B	C	Mounting Dimensions D	E	Mtg Screw G	Conduit Size K1	K2	K3	Approx Ship Wt Lbs (Kg)	Ref Dwg
0–1¾	3	13.000 (330)	12.625 (321)	5.375 (137)	12.250 (311)	10.000 (254)	¼	—	—	—	30 (14)	D41917
2–2½	3	16.000 (406)	13.250 (337)	6.000 (152)	15.250 (387)	11.000 (279)	¼	—	—	—	33 (15)	D42935
3–3½	3	26.000 (660)	18.000 (457)	7.563 (192)	25.250 (641)	10.000 (254)	¼	—	—	—	67 (30)	D41551
4	3	29.000 (737)	23.188 (589)	9.250 (235)	27.500 (699)	20.000 (508)	5/16	—	—	—	64 (29)	D43292
5 (Painted)	4	40.000 (1016)	20.000 (508)	11.000 (279)	41.000 (1041)	10.000 (254)	⅜	—	—	—		D65608007
6, 7 (Painted)	4	48.000 (1219)	20.000 (508)	12.500 (317)	49.000 (1244)	10.000 (254)	⅜	—	—	—		D65608009
8 (Painted)	5	79.000 (2010)	22.000 (559)	13.000 (330)	78.000 (1981)	18.000 (457)	⅜	—	—	—	275 (125)	D65632006

Note: Dimensions in inches (millimeters). Dimensions for reference, not for construction. Contact Sales Office for dimensions not listed.

① Used for addition of only CPT on size 2½. If pilot devices are needed, use size 3-3½ enclosure.

Figure 1

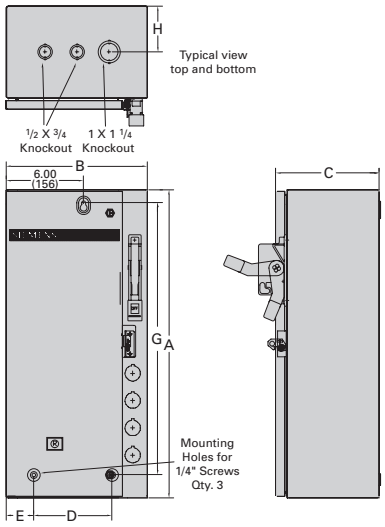

Figure 2

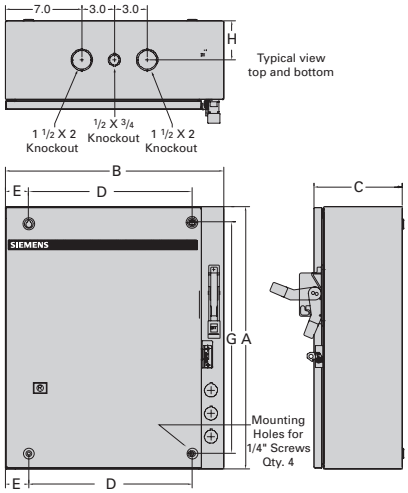

Figure 3

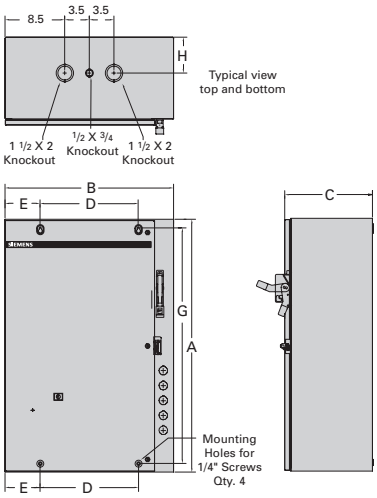

Figure 4

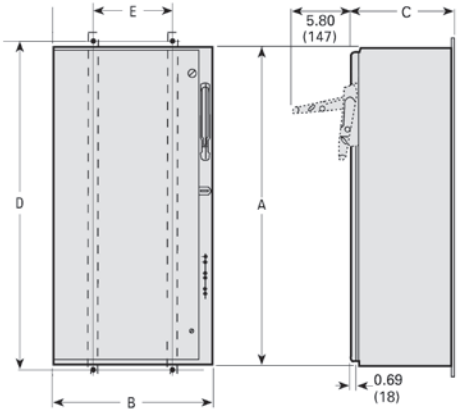

NEMA 1 Standard Width 0–6

Size	Figure	Outline Dimensions A	B	C	Mounting Dimensions D	E	G	H	Approx Ship Wt Lbs (Kg)	Ref Dwg
0–2	1	24 (610)	11 (279)	8 (203)	6.125 (156)	2.125 (54)	21.00 (533)	3.50 (90)	35 (16)	D68774001
2 1/2, 3 (except 200A Disc)	2	24 (610)	20 (508)	8 (203)	15.00 (381)	2.125 (54)	21.00 (533)	3.50 (90)	48 (22)	D68774002
3 (200A Disc.), 3 1/2, 4	3	36 (914)	24 (610)	8 (203)	14.00 (356)	5.00 (127)	33.50 (851)	5.00 (127)	101 (46)	D68774003
5	4	72.156 (1833)	20 (508)	11.031 (280)	71 (1803)	16 (406)	—	—	250 (113)	D56032005
6	4	79.125 (2010)	22 (559)	13 (330)	78 (1981)	18 (457)	—	—	275 (125)	D56032006

NEMA 1 Extra Wide 0–3

Size	Figure	Outline Dimensions A	B	C	Mounting Dimensions D	E	G	H	Approx Ship Wt Lbs (Kg)	Ref Dwg
0–2	2	24 (610)	20 (508)	8 (203)	15.00 (381)	2.125 (54)	21.00 (533)	3.50 (90)	48 (22)	D68774002
2½, 3	3	36 (914)	24 (610)	8 (203)	14.00 (356)	5.00 (127)	33.50 (851)	5.00 (127)	101 (46)	D68774003

Figure 1

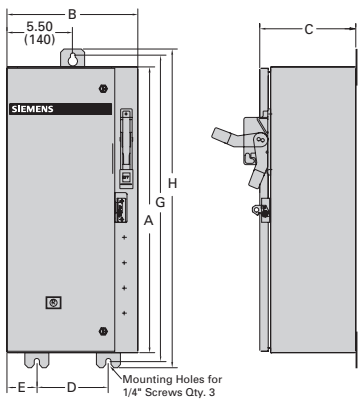

Figure 2

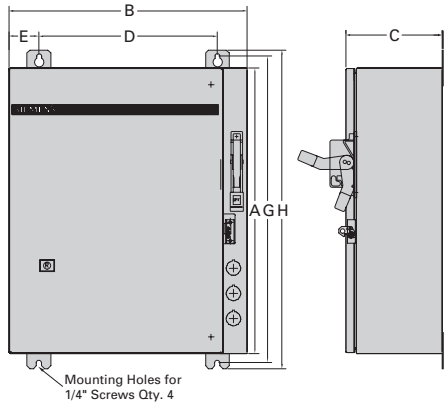

Figure 3

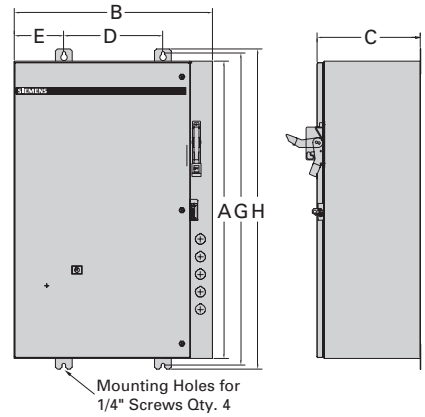

Figure 4

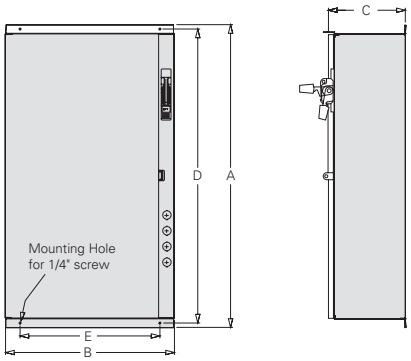

Figure 5

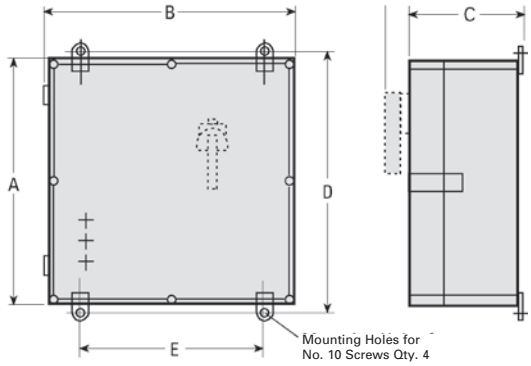

NEMA 12/3/3R/4 (Painted), 4/4X (Stainless) Standard Width 0–6

Size	Figure	Outline Dimensions			Mounting Dimensions				Approx Ship Wt Lbs (Kg)	Ref Dwg
		A	B	C	D	E	G	H		
0–2	1	24 (610)	11 (279)	8 (203)	6.00 (152)	2.50 (64)	25.75 (654)	26.75 (680)	35 (16)	D56033
2 1/2, 3 (except 200A Disc)	2	24 (610)	20 (508)	8 (203)	15.00 (381)	2.50 (64)	25.75 (654)	26.75 (680)	48 (22)	D56033
3 (200A Disc.), 3 1/2, 4	3	36 (914)	24 (610)	8 (203)	12 (305)	6.00 (152)	37.75 (959)	38.75 (984)	101 (46)	D56033
5 (Painted)	4	72.156 (1833)	20 (508)	11.031 (280)	71 (1830)	16 (406)	—	—	250 (113)	D56032005
6 (Painted)	4	79.125 (2010)	22 (559)	13 (330)	78 (1981)	18 (457)	—	—	275 (125)	D56032006

NEMA 12/3/3R/4 (Painted), 4/4X (Stainless) Extra Wide 0–3

Size	Figure	Outline Dimensions			Mounting Dimensions				Approx Ship Wt Lbs (Kg)	Ref Dwg
		A	B	C	D	E	G	H		
0–2	2	24 (610)	20 (508)	8 (203)	15.00 (381)	2.50 (64)	25.75 (654)	26.75 (654)	49 (22)	D56033
2½, 3	3	36 (914)	24 (610)	8 (203)	12.00 (305)	6.00 (152)	37.75 (959)	38.75 (984)	102 (46)	D56033

NEMA 4X Fiberglass Standard Width 0–4

Size	Figure	Outline Dimensions			Mounting Dimensions				Approx Ship Wt Lbs (Kg)	Ref Dwg
		A	B	C	D	E	G	H		
0–1¾	5	23.75 (603)	14.62 (371)	7.12 (181)	24.09 (612)	12.20 (310)	—	—	42 (19)	—
2–3½	5	23.75 (603)	23.75 (603)	8.50 (216)	24.06 (611)	21.30 (541)	—	—	44 (20)	—
4	5	39.37 (1000)	29.52 (750)	12.20 (310)	40.94 (1040)	27.95 (710)	—	—	55 (25)	—

Note: Dimensions in inches (mm).
Dimensions for reference, not for construction.
Contact sales office for dimensions not listed.

Figure 1

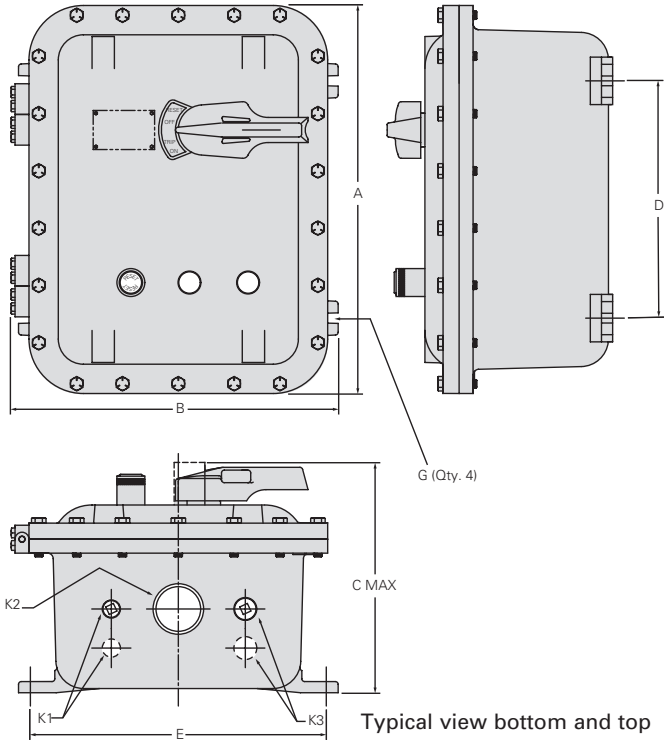

Typical view bottom and top

NEMA 7 & 9, 3, 4 Standard Width 0–4

Size	Figure	Outline Dimensions			Mounting Dimensions		Mounting Screw	Conduit Size			Approx Ship Wt Lbs (Kg)	Ref Dwg
		A	B	C	D	E	G	K1	K2	K3		
0–1¾	1	17.38 (441)	14.69 (373)	10.38 (264)	10.63 (270)	13.25 (337)	⅜	¾	2	½	60 (27)	24-139-865-003
2–3½	1	28.25 (718)	17.75 (451)	11.19 (284)	18.38 (467)	15.75 (400)	⅜	¾	2½	½	160 (72)	24-139-865-004
4	1	32.25 (819)	20.00 (508)	11.50 (292)	22.50 (572)	17.75 (451)	⅝	¾	2½	½	250 (113)	24-139-865-005
5	1	40.875 (1038)	22.875 (581)	14.875 (378)	29 (737)	21.75 (552)	⅝	½	3	¾	360 (163)	—

Note: Dimensions in inches (mm). Dimensions for reference, not for construction. Contact Sales Office for dimensions not listed.

Reversing Heavy Duty Starters & Contactors

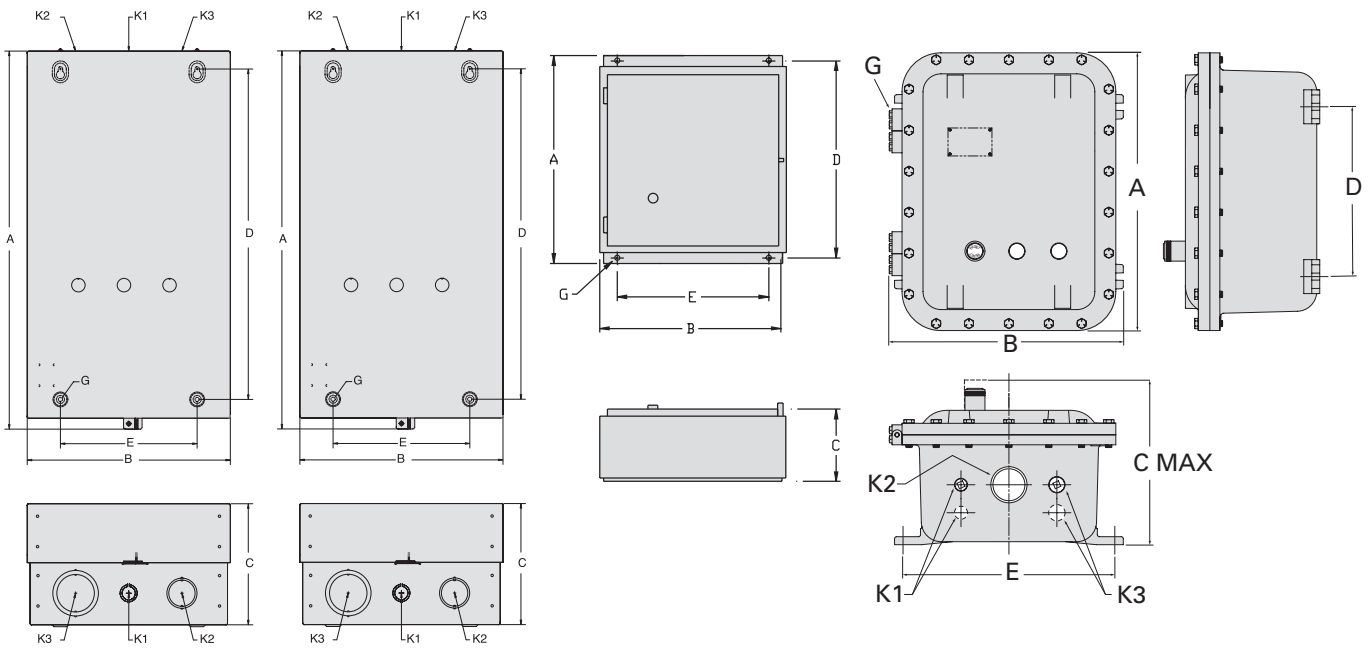

View is typical for bottom and top

NEMA 1 General Purpose Enclosure (Standard width for use with and without CPT)

Size	Figure	Outline Dimensions			Mounting Dimensions		Mounting Screw	Conduit Size				Approx Ship Wt Lbs (Kg)	Ref Dwg
		A	B	C	D	E	G	K1	K2	K3	K4		
00–2½ (200 VA)	1	19⅛ (486)	11⅜ (289)	7 11/16 (195)	15⅝ (397)	8¼ (210)	¼	½–¾	1–1¼	1½–2	—	30 (14)	D68870
3–4 (300 VA)	2	24⅞ (632)	13⅜ (340)	8⅛ (206)	21¾ (552)	9 (229)	¼	½–¾	1¼–1½	2–2½	—	52 (24)	D68870
5 (300 VA)		40 (1016)	20 (508)	11 (279)	37⅝ (956)	15¼ (387)	¼	2–3	1¼–1½	½–¾	1¼–1½	135 (36)	D65608
6, 7 (300 VA)		48 (1219)	20 (508)	12½ (317)	45 3/16 (1148)	10 (254)	¼	2–2½	1¼–1½	½–¾	1¼–1½	150 (44)	D65608013

NEMA 4/4X Stainless Steel Enclosure (with or without CPT)

Size	Figure	Outline Dimensions			Mounting Dimensions		Mtg Screw	Conduit Size			Approx Ship Wt Lbs (Kg)	Ref Dwg
		A	B	C	D	E	G	K1	K2	K3		
0–1¾	3	13 (330)	12⅝ (321)	5⅜ (137)	12¼ (311)	10 (254)	¼	—	—	—	30 (14)	D41917
2–2½	3	16 (406)	13¼ (337)	6 (152)	15¼ (387)	11 (279)	¼	—	—	—	33 (15)	D42935
3–3½ (w/o CPT)	3	25 1/16 (637)	17 9/16 (437)	7⅜ (187)	24 5/16 (618)	14 (356)	¼	—	—	—	53 (24)	D17423
3–3½ (w/ CPT) 4	3	29 (737)	23 3/16 (589)	9¼ (235)	27½ (699)	20 (508)	5/16	—	—	—	64 (29)	D43292
5 (Painted)		40 (1016)	20 (508)	11 (279)	41 (1041)	10 (254)	⅜	—	—	—		D65608007
6, 7 (Painted)		48(1219)	20 (508)	12½ (317)	49 (1244)	10 (254)	⅜	—	—	—		65608009

NEMA 7/9/3/4 Hazardous Location Enclosure (with or without CPT)

Size	Figure	Outline Dimensions			Mounting Dimensions		Mtg Screw	Conduit Size			Approx Ship Wt Lbs (Kg)	Ref Dwg
		A	B	C	D	E	G	K1	K2	K3		
0–2½	4	28¼ (718)	16¼ (413)	9¼ (235)	18⅜ (467)	15¾ (400)	½	½	3	¾	140	24-139-865-004
3–4	4	32¼ (819)	18¼ (464)	9 9/16 (243)	22½ (572)	17¾ (451)	½	½	3	¾	150	24-139-865-005

Note: Dimensions in inches (mm).
Dimensions for reference, not for construction.
Contact sales office for dimensions not listed.

Figure 5

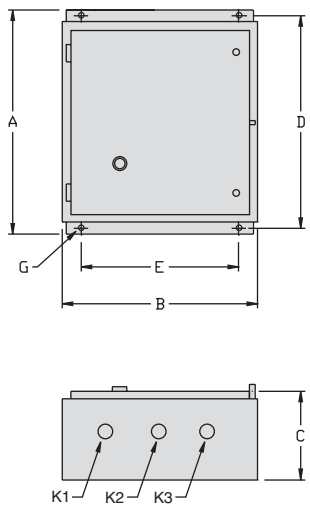

Figure 6

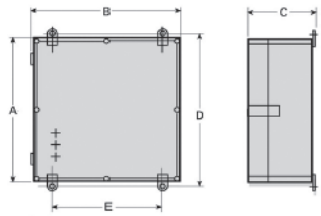

Figure 7

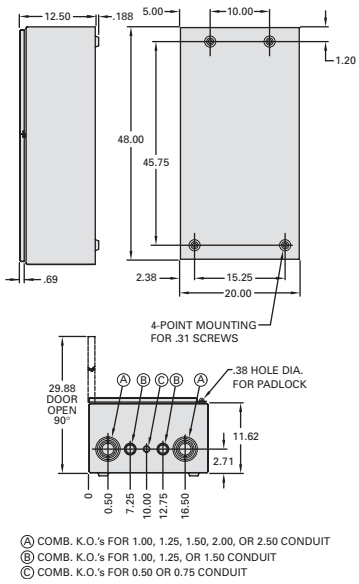

View is typical for bottom and top

NEMA 12/3/3R Industrial Use Enclosure (with or without CPT)

Size	Figure	Outline Dimensions			Mounting Dimensions		Mtg Screw	Conduit Size			Approx Ship Wt Lbs (Kg)	Ref Dwg
		A	B	C	D	E	G	K1	K2	K3		
0–1¾	5	13 (330)	12⅝ (321)	5⅜ (137)	12¼ (311)	10 (254)	¼	—	—	—	30 (14)	D17150
2–2½	5	16 (406)	13¼ (337)	6⅛ (156)	15¼ (387)	11 (279)	¼	—	—	—	33 (15)	D17150
3–3½ (w/o CPT)	5	25 1/16 (637)	17 3/16 (437)	7⅜ (187)	24 5/16 (618)	14 (356)	¼	—	—	—	53 (24)	D17150
3–3½ (w/ CPT)	5	29 1/16 (738)	23 3/16 (589)	9¼ (235)	27 9/16 (700)	20 (508)	5/16	—	—	—	64 (29)	D17150
4												
5	7	40 (1016)	20 (508)	11 (279)	41 (1041)	10 (254)	⅜	—	—	—		D65608007
6 (300 VA CPT max.)	7	48 (1219)	20 (508)	12½ (318)	45¾ (1162)	10 (254)	¼	—	—	—		

NEMA 4X Fiberglass Enclosure (with or without CPT)

Size	Figure	Outline Dimensions			Mounting Dimensions		Mtg Screw	Conduit Size			Approx Ship Wt Lbs (Kg)	Ref Dwg
		A	B	C	D	E	G	K1	K2	K3		
0–2½	6	23.78 (604)	14.68 (373)	6.89 (175)	22⅘ (579)	13⅘ (351)	¼	—	—	—	35	—
3–4	6	23.78 (604)	23.78 (604)	6.89 (175)	22⅘ (579)	22⅘ (579)	¼	—	—	—	38	—

Note: Dimensions in inches (mm).
Dimensions for reference, not for construction.
Contact sales office for dimensions not listed.

Combination Reversing Heavy Duty Starters

Figure 1

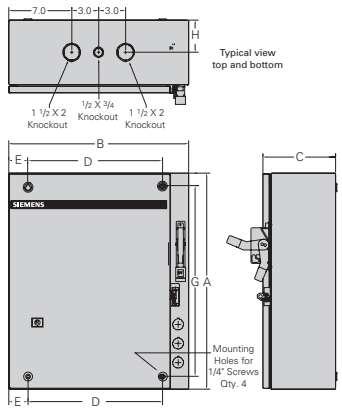

Figure 2

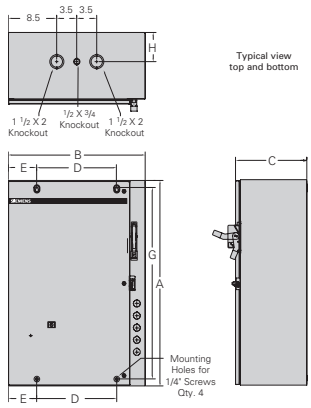

Figure 3

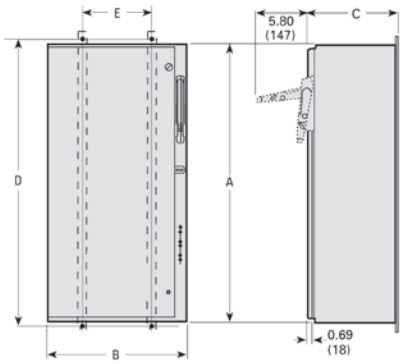

Figure 4

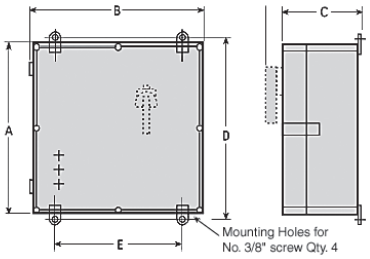

Figure 5

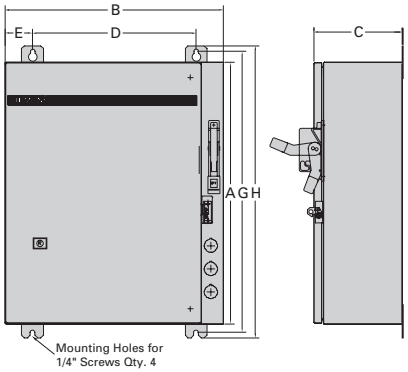

Figure 6

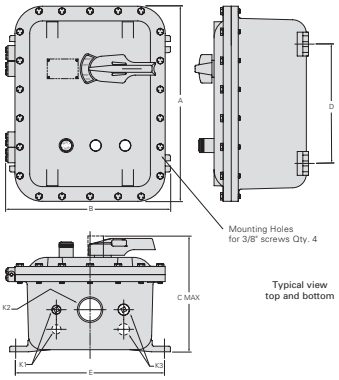

NEMA 1 Standard Width 0–6

Size	Figure	Outline Dimensions A	B	C	Mounting Dimensions D	E	G	H	Approx Ship Wt Lbs (Kg)	Ref Dwg
0–2½	1	24 (610)	20 (508)	8 (203)	15.00 (381)	2.125 (54)	21.00 (533)	3.50 (90)	60 (27)	D68774002
3–4	2	36 (914)	24 (610)	8 (203)	14.00 (356)	5.00 (127)	33.50 (851)	5.00 (127)	121 (55)	D68774003
5 (Painted)	3	72.156 (1833)	20 (508)	11.031 (280)	71 (1803)	16 (406)	—	—	250 (113)	D56032005
6 (Painted)	3	79.125 (2010)	22 (559)	13 (330)	78 (1981)	18 (457)	—	—	275 (125)	D56032006

NEMA 12/3/3R/4 (Painted), 4/4X (Stainless) Standard Width 0–6

Size	Figure	Outline Dimensions A	B	C	Mounting Dimensions D	E	G	H	Approx Ship Wt Lbs (Kg)	Ref Dwg
0–2½	5	24 (610)	20 (508)	8 (203)	15.00 (381)	3.50 (90)	25.75 (654)	26.75 (654)	63 (29)	D68774005
3–4	5	36 (914)	24 (610)	8 (203)	12 (305)	6.00 (152)	37.75 (959)	38.75 (984)	124 (56)	D68774006
5 (Painted)	3	72.156 (1833)	20 (508)	11.031 (280)	71 (1803)	16 (406)	—	—	250 (113)	D56032005
6 (Painted)	3	79.125 (2010)	22 (559)	13 (330)	78 (1981)	18 (457)	—	—	275 (125)	D56032006

NEMA 4X Fiberglass 0–4

Size	Figure	Outline Dimensions A	B	C	Mounting Dimensions D	E	Mtg Screw G	Conduit Size K1	K2	K3	Approx Ship Wt Lbs (Kg)	Ref Dwg
0–2½	4	23.780 (604)	14.680 (373)	6.890 (175)	24.125 (612.7)	12.250 (311)	⅜	—	—	—	18 (8)	24-139-861-001
3–4	4	23.780 (604)	23.780 (604)	6.890 (175)	24.125 (612.7)	21.250 (539.7)	⅜	—	—	—	28 (12.7)	24-139-861-003

NEMA 7/9/3/4 Hazardous Location 0–4

Size	Figure	Outline Dimensions A	B	C	Mounting Dimensions D	E	Mtg Screw G	Conduit Size K1	K2	K3	Approx Ship Wt Lbs (Kg)	Ref Dwg
0–2½	6	28.688 (729)	17.750 (451)	11.750 (298)	18.375 (467)	15.750. (400)	⅜	½	3	¾	140 (63.5)	24-139-865-004
3–4		Contact Sales Office										

Note: Dimensions in inches (mm).
Dimensions for reference, not for construction.
Contact sales office for dimensions not listed.

Figure 1

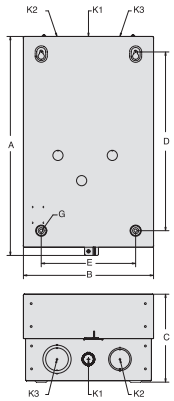

Figure 1a

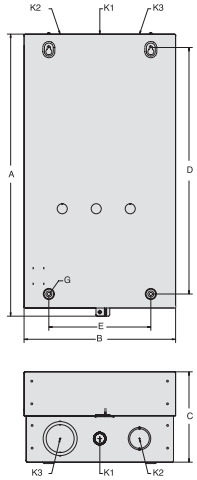

Figure 2

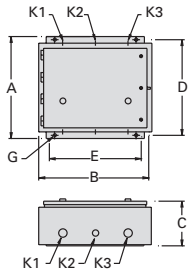

Figure 3

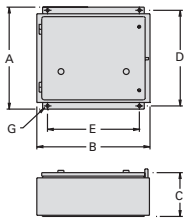

Figure 4

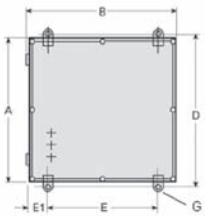

2 Speed 1 Winding

Size	Fig	Outline Dimensions A	Outline Dimensions B	Outline Dimensions C	Mounting Dimensions D	Mounting Dimensions E	Mtg Screw G	Conduit Size K1	Conduit Size K2	Conduit Size K3	Approx Ship Wt Lbs (Kg)	Ref Dwg
NEMA 1 General Purpose Enclosure (Standard width for use with or without CPT)												
0–1 ¾ w/o CPT	1	19 ⅛ (486)	11 ⅜ (289)	7 11/16 (195)	15 ⅝ (397)	8 ¼ (210)	¼	½–¾	1–1¼	1 ½–2	26 (12)	D68870
0–1 ¾ (200 VA)	1a	24 ⅞ (632)	13 ⅜ (340)	8 ⅛ (206)	21 ¾ (552)	9 (229)	¼	½–¾	1¼–1 ½	2–2 ½	52 (24)	D68870
2–2 ½	2	16 (406)	17.13 (435)	7.63 (194)	15.25 (387)	14 (355)	¼	½–¾	1¼–1 ½	1 ¼–1 ½	39 (20)	D42932001
3–3 ½	2	18.31 (465)	21.19 (538)	7.38 (187)	17.56 (446)	18 (457)	¼	1¼–1 ½	½–¾	1 ½–2	60 (27)	D72956002
4	3	29 (737)	23 3/16 (589)	9 ¼ (235)	27 ½ (699)	20 (508)	5/16	—	—	—	61 (28)	D43292001
NEMA 4/4X Stainless Steel Enclosure (Standard width for use with or without CPT)												
0–1 ¾ w/o CPT	3	13 (330)	12 ⅝ (321)	5 ⅜ (137)	12 ¼ (311)	10 (254)	¼	—	—	—	34 (15)	D41917000
0–1 ¾ w/ CPT	3	16 (406)	17 ⅛ (435)	7 ⅝ (194)	15 ¼ (387)	14 (355)	¼	—	—	—	47 (21)	
2–2 ½ w/o CPT	3	16 (406)	17 ⅛ (435)	7 ⅝ (194)	15 ¼ (387)	14 (355)	¼	—	—	—	47 (21)	
2–2 ½ w/ CPT	3	25 1/16 (637)	17 3/16 (437)	7 ⅜ (187)	24 5/16 (618)	14 (355)	¼	—	—	—	55 (25)	
3–3 ½	3	29 (737)	23 3/16 (589)	9 ¼ (235)	27 ½ (699)	20 (508)	5/16	—	—	—	61 (28)	D43292001
4	3	29 (737)	23 3/16 (589)	9 ¼ (235)	27 ½ (699)	20 (508)	5/16	—	—	—	61 (28)	D43292001
NEMA 12/3/3R Industrial Use Enclosure (Standard width for use with or without CPT)												
0–1 ¾ w/o CPT	3	13 (330)	12 ⅝ (321)	5 ⅜ (137)	12 ¼ (311)	10 (254)	¼	—	—	—	34 (15)	
0–1 ¾ w/ CPT	3	16 (406)	17 ⅛ (435)	7 ⅝ (194)	15 ¼ (387)	14 (355)	¼	—	—	—	47 (21)	D17150010
2–2 ½ w/o CPT	3	16 (406)	17 ⅛ (435)	7 ⅝ (194)	15 ¼ (387)	14 (355)	¼	—	—	—	47 (21)	D17150010
2–2 ½ w/ CPT	3	25 1/16 (637)	17 3/16 (437)	7 ⅜ (187)	24 5/16 (618)	14 (355)	¼	—	—	—	55 (25)	
3–4	3	29 (737)	23 3/16 (589)	9 ¼ (235)	27 ½ (699)	20 (508)	5/16	—	—	—	61 (28)	D19673000
NEMA 4X Fiberglass Enclosure (Standard width for use with or without CPT)												
0–2 ½	4	23.780 (604)	23.780 (604)	6.890 (175)	—	—	¼	—	—	—	28 (13)	24139861003
3–4	4	39.37 (1000)	29.53 (750)	12.60 (320)	—	—	—	—	—	—		24139861004

2 Speed 2 Winding

Size	Fig	Outline Dimensions A	Outline Dimensions B	Outline Dimensions C	Mounting Dimensions D	Mounting Dimensions E	Mtg Screw G	Conduit Size K1	Conduit Size K2	Conduit Size K3	Approx Ship Wt Lbs (Kg)	Ref Dwg
NEMA 1 General Purpose Enclosure (Standard width for use with or without CPT)												
0–2 ½ w/o CPT	1	19 ⅛ (486)	11 ⅜ (289)	7 11/16 (195)	15 ⅝ (397)	8 ¼ (210)	¼	½–¾	1–1 ¼	1 ½–2	30 (14)	D68870
0–2 ½ (200 VA)	1a	24 ⅞ (632)	13 ⅜ (340)	8 ⅛ (206)	21 ¾ (552)	9 (229)	¼	½–¾	1 ¼–1 ½	2–2 ½	52 (24)	D68870
3–4 w/o CPT	1a	24 ⅞ (632)	13 ⅜ (340)	8 ⅛ (206)	21 ¾ (552)	9 (229)	¼	½–¾	1 ¼–1 ½	2–2 ½	52 (24)	D68870
NEMA 4/4X Stainless Steel Enclosure (Standard width for use with or without CPT)												
0–1 ¾ w/o CPT	3	13 (330)	12 ⅝ (321)	5 ⅜ (137)	12 ¼ (311)	10 (254)	¼	—	—	—	34 (15)	
0–1 ¾ w/ CPT	3	16 (406)	17 ⅛ (435)	7 ⅝ (194)	15 ¼ (387)	14 (355)	¼	—	—	—	41 (19)	
2–2 ½ w/o CPT	3	16 (406)	13 ¼ (337)	6 (152)	15 ¼ (387)	11 (279)	¼	—	—	—	41 (19)	
2–2 ½ w/ CPT	3	16 (406)	17 ⅛ (435)	7 ⅝ (194)	15 ¼ (387)	14 (355)	¼	—	—	—	41 (19)	
3–3 ½ w/o CPT	3	25 1/16 (637)	17 3/16 (187)	7 ⅜ (187)	24 5/16 (618)	14 (355)	¼	—	—	—	55 (25)	
3–3 ½ w/ CPT	3	29 (737)	23 3/16 (589)	9 ¼ (235)	27 ½ (699)	20 (508)	5/16	—	—	—	61 (28)	D43292001
4	3	29 (737)	23 3/16 (589)	9 ¼ (235)	27 ½ (699)	20 (508)	5/16	—	—	—	61 (28)	D43292001
NEMA 12/3/3R Industrial Use Enclosure (Standard width for use with or without CPT)												
0–1 ¾ w/o CPT	3	13 (330)	12 ⅝ (321)	5 ⅜ (137)	12 ¼ (311)	10 (254)	¼	—	—	—	34 (15)	
0–1 ¾ w/CPT	3	16 (406)	17 ⅛ (435)	7 ⅝ (194)	15 ¼ (387)	14 (355)	¼	—	—	—	41 (19)	D17150010
2–2 ½ w/o CPT	3	16 (406)	13 ¼ (337)	6 ⅛ (156)	15 ¼ (387)	11 (279)	¼	—	—	—	41 (19)	
2–2 ½ w/CPT	3	16 (406)	17 ⅛ (435)	7 ⅝ (194)	15 ¼ (387)	14 (355)	¼	—	—	—	41 (19)	D17150010
3–3 ½ w/o CPT	3	25 1/16 (637)	17 3/16 (187)	7 ⅜ (187)	24 5/16 (618)	14 (355)	¼	—	—	—	55 (25)	
3–4 w/CPT	3	29 1/16 (738)	23 3/16 (589)	9 ¼ (235)	27 9/16 (700)	20 (508)	5/16	—	—	—	61 (28)	D19673000
NEMA 4X Fiberglass Enclosure (Standard width for use with or without CPT)												
0–2 ½	4	23.780 (604)	23.780 (604)	6.890 (175)	—	—	¼	—	—	—	28 (13)	24139861003
3–4	4	39.37 (1000)	29.53 (750)	12.60 (320)	—	—	—	—	—	—		24139861004

Note: Dimensions in inches (mm). Dimensions for reference, not for construction. Contact sales office for dimensions not listed.

Figure 1

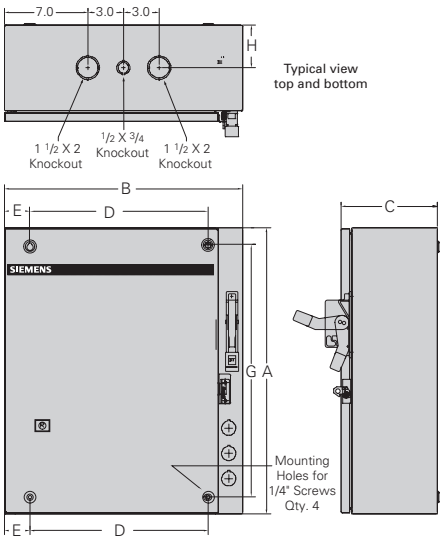

Figure 2

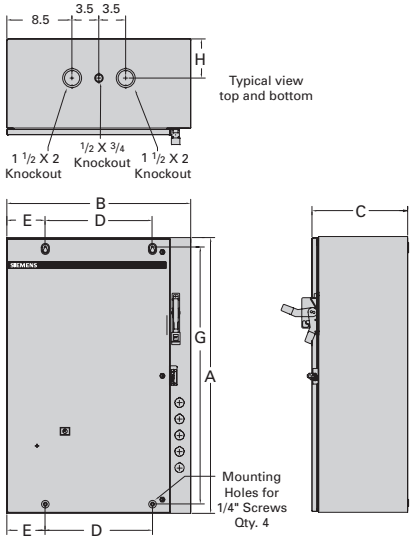

Figure 3

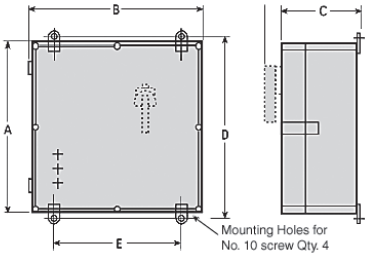

Figure 4

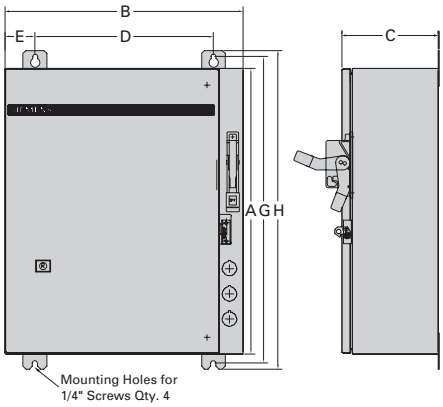

NEMA 1 Standard Width 0–4

Size	Figure	Outline Dimensions A	B	C	Mounting Dimensions D	E	G	H	Approx Ship Wt Lbs (Kg)	Ref Dwg
0–1¾ (1 Winding)	1	24 (610)	20 (508)	8 (203)	15.00 (381)	2.125 (54)	21.00 (533)	3.50 (90)	68 (31)	D68774
2–4 (1 Winding)	2	36 (914)	24 (610)	8 (203)	14.00 (356)	5.00 (127)	33.50 (851)	3.50 (90)	71 (32)	D68774
0–2½ (2 Winding)	1	24 (610)	20 (508)	8 (203)	15.00 (381)	2.125 (54)	21.00 (533)	3.50 (90)	135 (61)	D68774
3–4 (2 Winding)	2	36 (914)	24 (610)	8 (203)	14.00 (356)	5.00 (127)	33.50 (851)	3.50 (90)	138 (63)	D68774

NEMA 12/3/3R/4 (Painted), 4/4X Stainless Standard Width 0–4

0–1¾ (1 Winding)	4	24 (610)	20 (508)	8 (203)	15.00 (381)	2.50 (64)	25.75 (654)	26.75 (680)	68 (31)	D68774
2–4 (1 Winding)	4	36 (914)	24 (610)	8 (203)	12 (305)	6.00 (152)	37.75 (959)	38.75 (984)	71 (32)	D68774
0–2½ (2 Winding)	4	24 (610)	20 (508)	8 (203)	15.00 (381)	2.50 (64)	25.75 (654)	26.75 (680)	135 (61)	D68774
3–4 (2 Winding)	4	36 (914)	24 (610)	8 (203)	12 (305)	6.00 (152)	37.75 (959)	38.75 (984)	138 (63)	D68774

Nema 4X Fiberglass 0–4

Size	Figure	Outline Dimensions A	B	C	Mounting Dimensions D	E	Mtg Screw G	Conduit Size K1	K2	K3	Approx Ship Wt Lbs (Kg)	Ref Dwg
0–1¾	3	23.780 (604)	14.680 (373)	6.890 (175)	24.125 (613)	12.250 (311)	¼	—	—	—	18 (8)	—
2–4	3	23.780 (604)	23.780 (604)	6.890 (175)	24.125 (613)	21.250 (540)	¼	—	—	—	28 (13)	—

Note: Dimensions in inches (mm).
Dimensions for reference, not for construction.
Contact sales office for dimensions not listed.

Figure 1

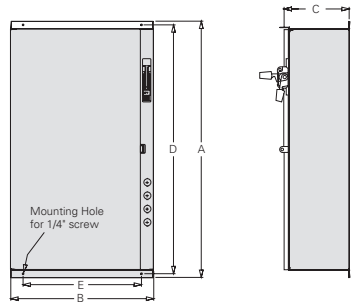

Figure 2

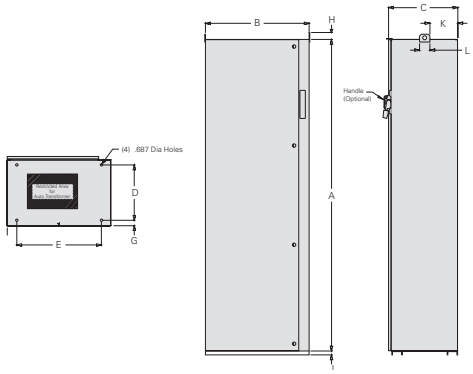

Class 36, 37, NEMA 1, 4, 4X, 12/3R, Combination and Non-combination

Reduced Voltage AutoTransformer Size	Part Winding & Wye Delta		Figure	A	B	C	D	E	G	H	I	J	K	L
	Disconnect	Circuit Breaker												
1 3/4–2 1/2	0–2	0–2 1/2	1	43 5/16	24 5/32	11	42 11/32	20	—	—	—	—	—	—
3–3 1/2	2 1/2–3 1/2	3–3 1/2	1	55 5/16	28 9/32	11	54 11/32	24	—	—	—	—	—	—
4	4	4	1	74 21/32	28 9/32	11	73 13/32	24	—	—	—	—	—	—
5, 6	5, 6	5, 6	2	90	29 30/31	20	16	24 7/16	2 16/21	1 23/40	—	1 1/8	8 3/40	3

Class 82 size 1

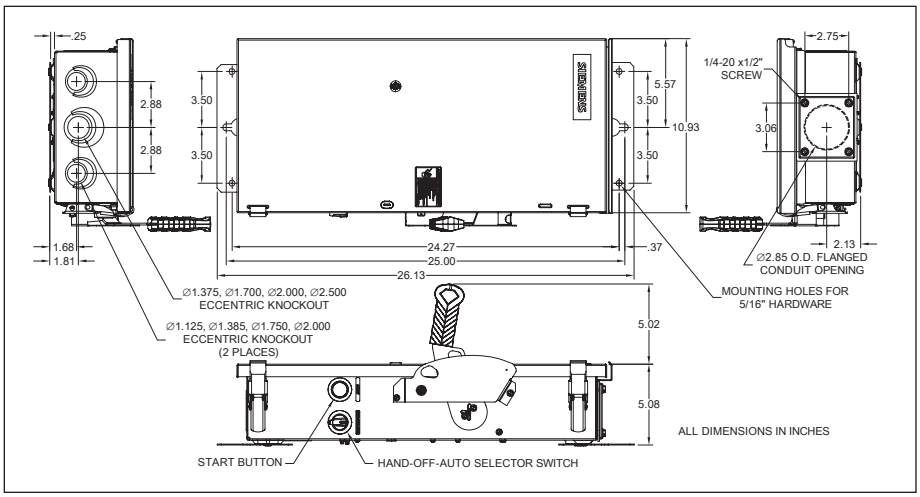

Class 82 Size 1 1/2, 2

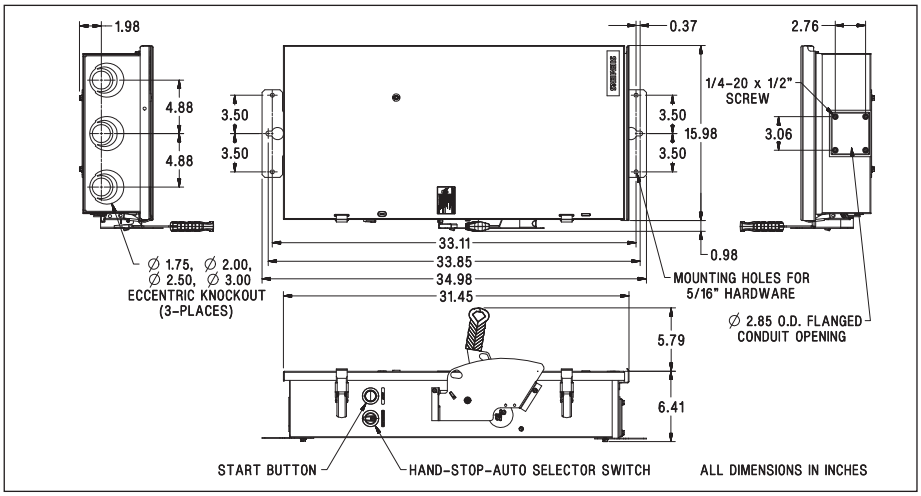

Figure 1

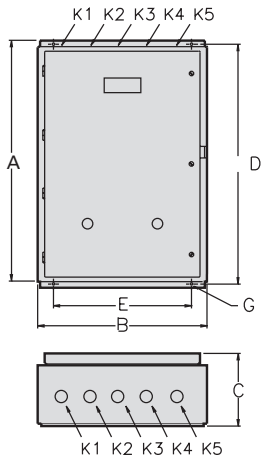

Figure 2

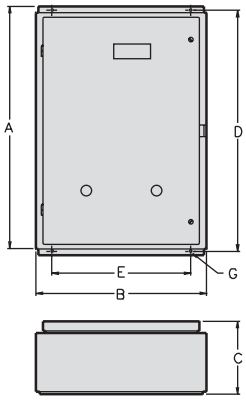

Figure 3

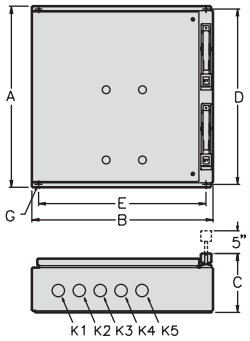

Class 83 Non-Combination Type

Enclosure Type	Size	Outline Dimensions				Mounting Dimensions		Mounting Screw	Conduit Size					Approx Ship Wt Lbs
		Figure	A	B	C	D	E	G	K1	K2	K3	K4	K5	
NEMA 1	0–1¾	1	19½	16⅛	6½	18¾	13	¼	1¼–1½	½–¾	½	½–¾	1¼–1½	20
	2, 2½	1	25 1/16	17 3/16	7⅜	24 5/16	14	¼	1¼–1½	½–¾	½–¾	1¼–1½	1½–2	57
	3–4	1	29 11/16	23 3/16	9¼	27 9/16	20	5/16	2–2½	1¼–1½	½–¾	1¼–1½	2–2½–3	93
NEMA 12	0–1¾	2	19½	16⅛	6½	18¾	13	¼	—	—	—	—	—	20
	2, 2½	2	25 1/16	17 3/16	7⅜	24 5/16	14	¼	—	—	—	—	—	57
	3–4	2	29 1/16	23 3/16	9¼	27 9/16	20	5/16	—	—	—	—	—	93
NEMA 4/4X②	0–1¾	2	19½	16⅛	6½	18¾	13	¼	—	—	—	—	—	20
	2, 2½	2	25 1/16	17 3/16	7⅜	24 5/16	14	¼	—	—	—	—	—	57
	3–4	2	29 1/16	23 3/16	9¼	27 9/16	20	5/16	—	—	—	—	—	93

Class 84 Combination Type

Enclosure Type	Size	Outline Dimensions				Mounting Dimensions		Mounting Screw	Conduit Size					Approx Ship Wt Lbs
		Figure	A	B	C	D	E	G	K1	K2	K3	K4	K5	
NEMA 1	0–1¾	3	34⅛	24⅝	7 9/16	33	20	⅜	⅞–1⅛	⅞–1⅛	1⅛–1 23/64	1⅛–1 23/64	1 23/64–1 23/32	70
	2–4	3	56	28½	9 11/16	54 13/16	24¼	⅜	—	—	—	—	—	106
NEMA 4(painted)	0–1¾	3	34⅛	24⅝	7 9/16	33	20	⅜	—	—	—	—	—	70
4X, 12	2–4	3	56	28½	9 11/16	54 13/16	24¼	⅜	—	—	—	—	—	106

① Dimensions may vary for size 3 & 4 stainless steel enclosures.

② NEMA 4 Painted, 4X Stainless Steel.

Outline Drawings

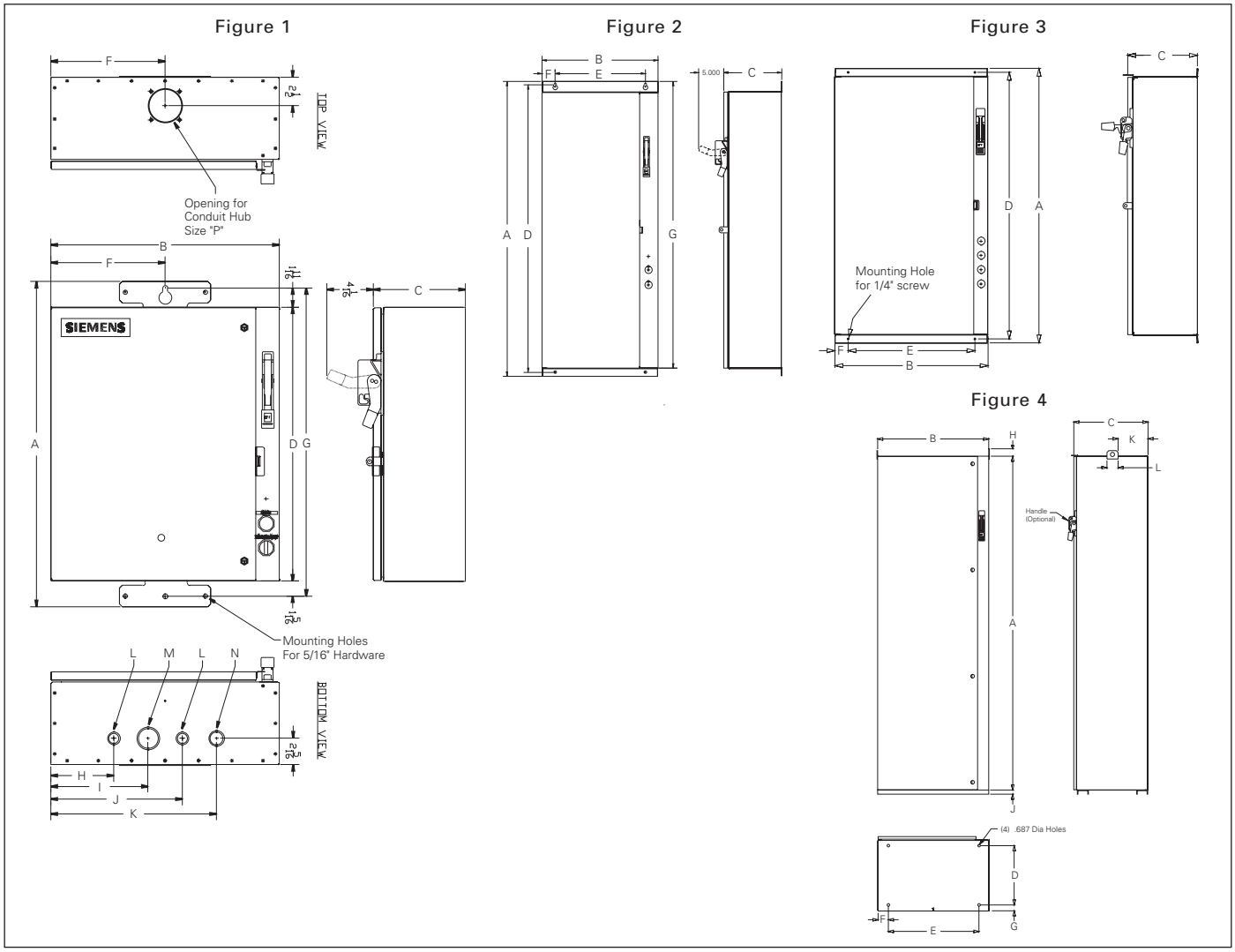

Class 87 Standard and Vacuum Starter Pump Panel

Size	Figure	A	B	C	D	E	F	G	H	I	J	K	Conduit Knockout L	Conduit Knockout M	Conduit Knockout N	Hub P
1 – 2½	1	28½	20	8 1/16	24	—	10	27	5 1/2	8 1/2	11 1/2	14 1/2	1/2 x 3/4	1 1/4 x 1	3/4 x 1	1 1/2
3 – 4	1	40½	24	8 3/32	36	—	12	39	8 7/16	11 15/16	15 7/16	—	1 31/32 x 2 15/32	7/8 x 1 1/8	—	2 1/2
5	2	72 5/32	20	11	71	16	2 1/8	70 29/32	—	—	—	—	—	—	—	—
6	2	79 1/8	22	12 15/16	78	18	2 1/8	77 7/8	—	—	—	—	—	—	—	—
4 (Vac)	2	55 31/32	24 3/8	9 22/32	54 26/32	20 1/4	2 1/8	54 23/32	26 3/16	—	5	27 14/32	—	—	—	—

Class 88 Reduced Voltage Pump Panels

RVAT Size	Part Winding & Wye Delta: Fusible Disconnect	Part Winding & Wye Delta: Circuit Breaker	Figure	A	B	C	D	E	F	H	I	J	K	L
2–2½	1–2	1–2½	3	43 5/16	24 5/32	11	42 11/32	20	2 1/16	—	—	—	—	—
3–3½	2½–3½	3–3½	3	55 5/16	28 9/32	11	54 11/32	24	2 1/8	—	—	—	—	—
4	4	4	3	74 21/32	28 9/32	11	73 13/32	24	2 1/8	—	—	—	—	—
5, 6	5, 6	5, 6	4	90	30	20	16	24 7/16	2 3/4	1 1/2	—	1 1/8	8 1/16	3

Note: Dimensions in inches (millimeters). Dimensions for reference, not for construction. Contact Sales Office for dimensions not listed.

Figure 1

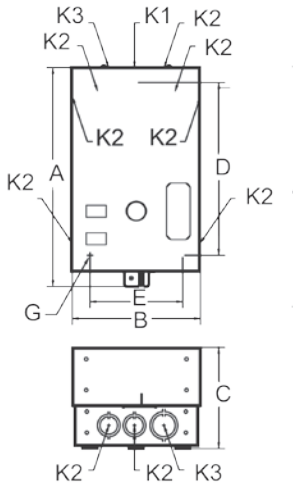

Figure 2

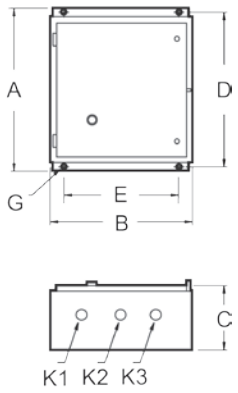

Figure 3

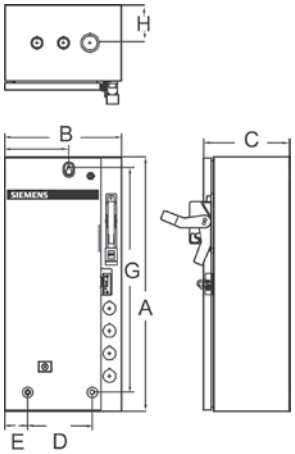

Enclosure Type	Contactor Rating (Class LC and LE)	Fig.	Outline Dimensions			Mounting		Conduit Size				
			A	B	C	D	E	K1	K2	K3	K4	K5
1 without CPT	LE 20/30A 3-4P	1	10.97	6.41	5.03	8.22	4.62	0.5	0.50-0.75	0.75–1	—	—
	LC 30A 2-12P, LE 60A 3P	1	13.53	7.97	6.38	10.25	6.00	0.50-0.75	0.75-1	1-1.25	—	—
	LE 30/60A 6-12P, LE 100A 3P	1	19.12	11.38	7.69	15.62	8.25	0.50-0.75	1-1.25	1.5-2	—	—
	LE 200-400A 3P	2	26.00	17.62	12.50	25.19	15.50	0.50-0.75	1.25-1.5	1.25-1.5	—	—
1 with CPT	LC 30A 2-12P, LE 20A 3-4P, LE 30A 3-9P, LE 60A 3-9P, LE 100A 3P	1	19.12	11.38	7.69	15.62	8.25	0.50-0.75	1-1.25	1.5–2	—	—
	LE 30/60A 12P	1	24.88	13.38	8.12	21.75	9.00	0.50-0.75	1.25-1.5	2-2.5	—	—
	LE 200-400A 3P	2	26.00	17.62	12.50	25.19	15.50	—	1.25-1.5	1.25-1.5	—	—
12/3R & 4/4X without CPT	LE 20A 3-4P, LE 30/60A 3-9P, LE 100A 3P, LC 30A 2-12P	2	16.00	13.25	6.12	15.25	11.00	—	—	—	—	—
	LE 30/60A 12P	2	26.00	13.12	7.56	25.25	10.00	—	—	—	—	—
	LE 200-400A 3P	2	26.00	17.62	12.50	23.19	15.50	—	—	—	—	—
12/3R & 4/4X with CPT	LE 20/30A 3-4P, LE 60A 3P	2	16.00	13.25	6.12	15.25	11.00	—	—	—	—	—
	LC 30A 2-12P	2	16.00	17.13	7.63	15.25	11.00	—	—	—	—	—
	LE 30/60A 6-12P, LE 100A 3P	2	26.00	13.12	7.56	15.25	14.00	—	—	—	—	—
	LE 200-400A 3P	2	26.00	17.62	12.50	25.19	15.50	—	—	—	—	—

Enclosure Type	Type (Class LE)	Contactor Rating	Fig.	Outline Dimensions		
				A	B	C
1, 12 & 4/4X with and without CPT	Fusible and Non-fusible Disconnect	20–60A	3	24	11	8
		100A	3	24	20	8
		200A	3	46	20	10
		300A	3	76	22	13
	Circuit Breaker	20-100A	3	24	11	8

Dimensions are in inches.
1) G designates 0.25" mounting screw.
2) Enclosures shown in figure 1 have lift-off covers. All other enclosures have hinged covers.

Figure 1

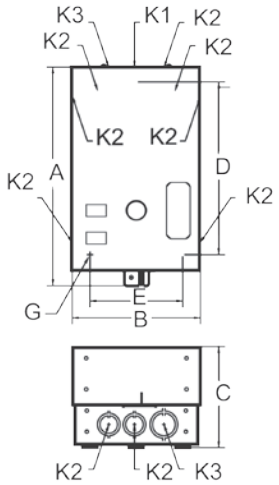

Figure 2

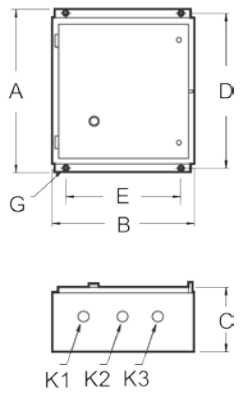

Figure 3

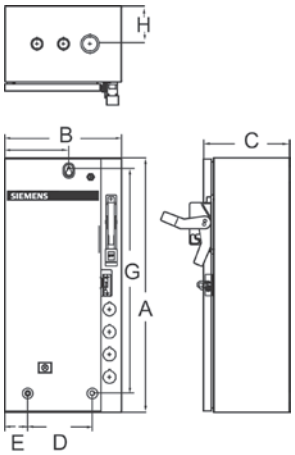

Enclosure Type	Contactor Rating (Class CLM)	Fig.	Outline Dimensions			Mounting		Conduit Size				
			A	B	C	D	E	K1	K2	K3	K4	K5
1 without CPT	30–60A (2-5p)	1	10.97	6.41	5.03	8.22	4.62	0.5	0.50-0.75	0.75–1	—	—
	20A (2–12p)	1	13.53	7.97	6.38	10.25	6.00	0.50-0.75	0.75-1	1-1.25	—	—
	30–60A (6-12p)	2	16.00	17.12	7.62	15.25	14.00	0.50-0.75	1.25-1.5	1.25-1.5	—	—
	100A (2-5p)	1	19.12	11.38	7.69	15.62	8.25	0.50-0.75	1-1.25	1.5-2	—	—
	200A (2-5p)	1	24.88	13.38	8.12	21.75	9.00	0.50-0.75	1.25-1.5	2.5	—	—
	300–400A (2-5p)	2	48.00	20.00	12.50	45.19	10.00	2.00-2.50	1.25-1.5	0.5-0.75	1.25-1.5	2-2.5
1 with CPT	20A (2–12p), 30A (2–5p)	1	19.12	11.38	7.69	15.62	8.25	0.50-0.75	1-1.25	1.5–2	—	—
	30–60A (6–12p)	2	16.00	17.12	7.62	15.25	14.00	0.50-0.75	1.25-1.5	1.25-1.5	—	—
	100-200A (2-5p)	2	26.00	17.62	12.50	25.19	15.50	—	1.25-1.5	1.25-1.5	—	—
	300–400A (2-5p)	2	48.00	20.00	12.50	45.19	10.00	2.00-2.50	1.25-1.5	0.5-0.75	1.25-1.5	2-2.5
12/3R & 4/4X without CPT	20A (2–12p), 30A (2–12p), 60A (2-10p)	2	16.00	13.25	6.12	15.25	11.00	—	—	—	—	—
	100A (2-5p)	2	16.00	13.00	9.50	15.12	11.00	—	—	—	—	—
	60A (12p)	2	19.00	22.00	8.00			—	—	—	—	—
	200A (2-5p)	2	26.00	17.62	12.50	23.19	15.50	—	—	—	—	—
	300A -400A (3p),	2	48.00	20.00	12.50	49.00	10.00	—	—	—	—	—
12/3R & 4/4X with CPT	20A (2-12p), 30A (2-5p)	2	16.00	13.25	6.12	15.25	11.00	—	—	—	—	—
	30A (6-12p)	2	16.00	17.12	7.62	15.25	14.00	—	—	—	—	—
	60-100A (2-5p)	2	16.00	13.00	9.50	15.12	11.00	—	—	—	—	—
	60A (6-12p)	2	19.00	22.00	8.00			—	—	—	—	—
	200A (3p)	2	26.00	17.62	12.50	25.19	15.50	—	—	—	—	—
	300–400A (3p)	2	48.00	20.00	12.50	49.00	10.00	—	—	—	—	—

Enclosure Type	Type (Class CM)	Contactor Rating	Fig.	Outline Dimensions		
				A	B	C
1, 12 & 4/4X with and without CPT	Fusible and Non-fusible Disconnect	20–60A	3	24	11	8
		100A	3	24	20	8
		200A	3	46	20	10
		300A	3	76	22	13
	Circuit Breaker	20-100A	3	24	11	8

Dimensions are in inches.
1) G designates 0.25" mounting screw.
2) Enclosures shown in figure 1 have lift-off covers. All other enclosures have hinged covers.

Class 11 - 3RV

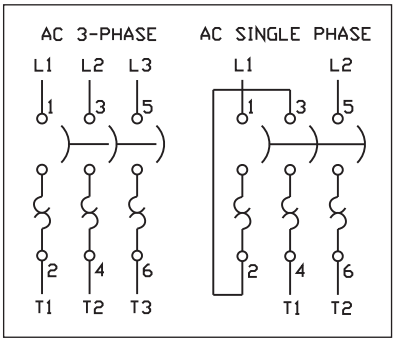

Signaling Contact for Class 11 - 3RV

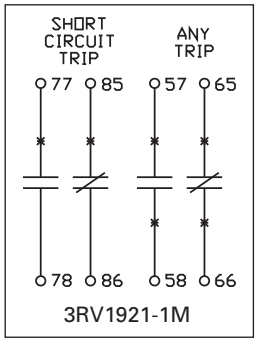

Typical Wiring Diagrams—Class SMF

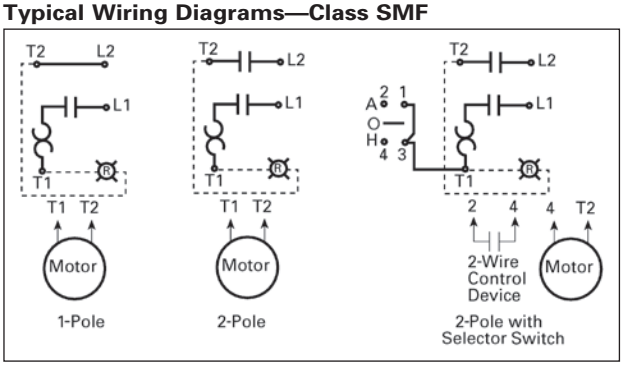

Typical Wiring Diagrams—MMS

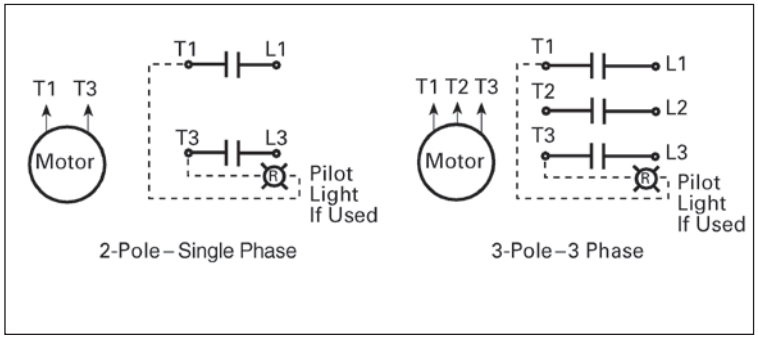

AC Reversing Manual Starter and Manual Motor Starting Switches

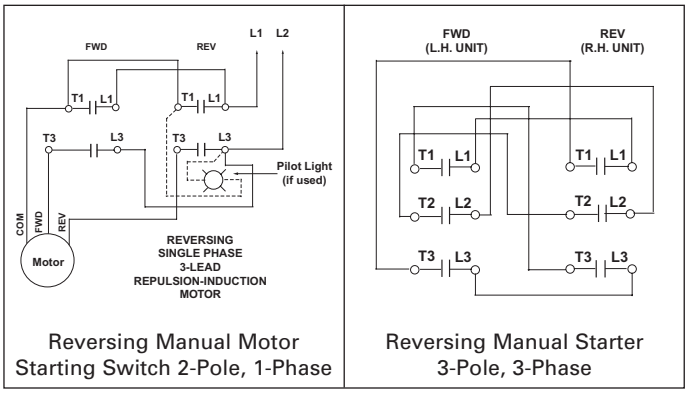

Reversing Manual Motor Starting Switch 2-Pole, 1-Phase

Reversing Manual Starter 3-Pole, 3-Phase

AC 2-Speed Manual Motor Starting Switches

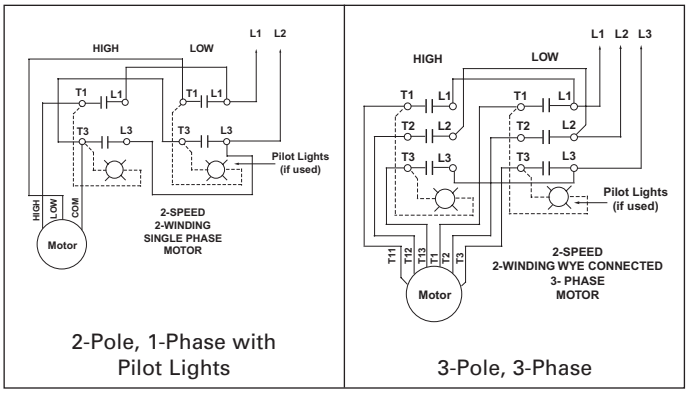

2-Pole, 1-Phase with Pilot Lights

3-Pole, 3-Phase

3-Pole Reversing Switches

THREE PHASE MOTOR			
LINE AND MOTOR LEADS		L.H. UNIT	R.H. UNIT
Line	L1 to L2 to L3 to	– – –	L1 L2 L3
Meter	T1 to T2 to T3 to	T1 T2 T3	– – –
Pilot Light Leads to		– –	T1 T3

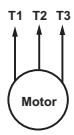

SINGLE PHASE CAPACITOR OR SPLIT PHASE MOTOR			
LINE AND MOTOR LEADS		L.H. UNIT	R.H. UNIT
Line	L1 to L2 to	– –	L1 L2
Meter	T1 to T4 to T5 to T8 to	T1 T3 L1 T2	– – – –
Furnish Jumper		L3 to	T2
Pilot Light Leads to		– –	T1 T3

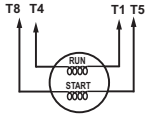

SINGLE PHASE 4-LEAD REPULSION - INDUCTION MOTOR			
LINE AND MOTOR LEADS		L.H. UNIT	R.H. UNIT
Line	L1 to L2 to	– –	L1 L2
Meter	T1 to T4 to T5 to T8 to	T2 L3 T3 T1	– – – –
Furnish Jumper		L3 to	T2
Pilot Light Leads to		– –	L1 T2

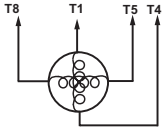

3-Phase and Single Phase Magnetic Starters

Three Phase Magnetic Starter, Size 00–4

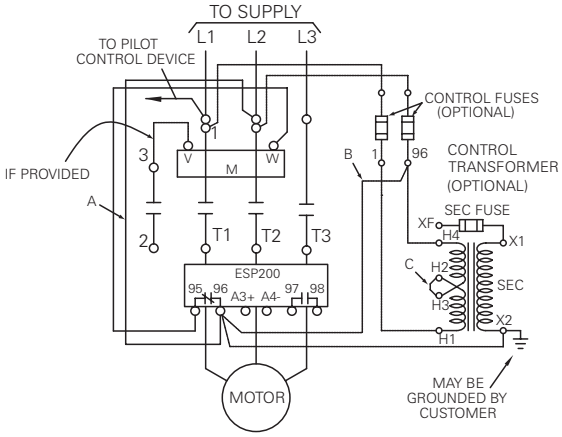

Single Phase Magnetic Starter①②

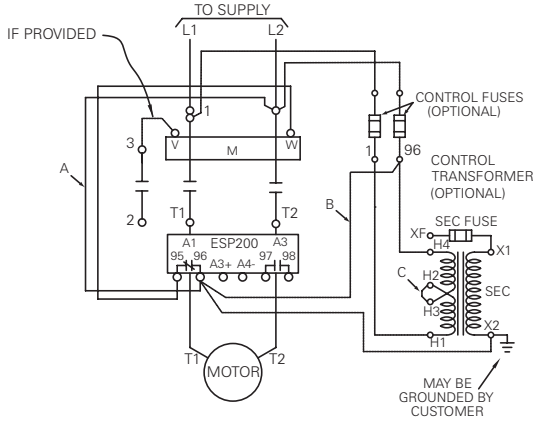

Three Phase Magnetic Starter with DC Coil, Sizes 00–4

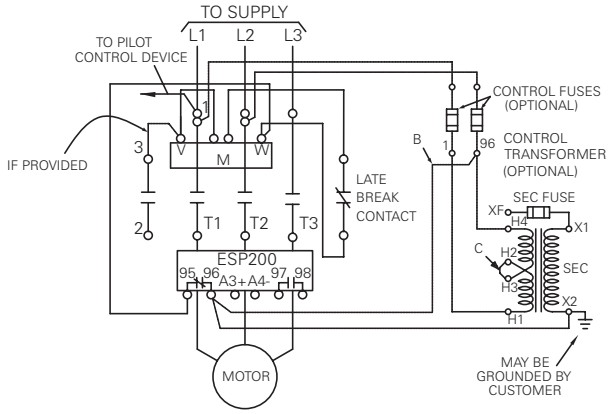

Solid State Overload 3-Phase Sizes 5-8

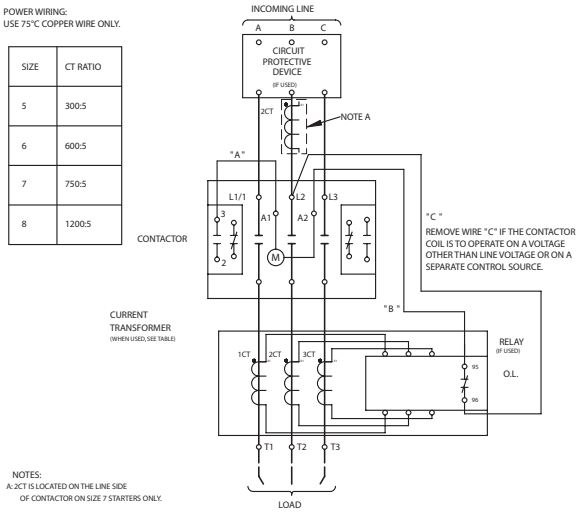

SIZE	CT RATIO
5	300:5
6	600:5
7	750:5
8	1200:5

"C"
REMOVE WIRE "C" IF THE CONTACTOR COIL IS TO OPERATE ON A VOLTAGE OTHER THAN LINE VOLTAGE OR ON A SEPARATE CONTROL SOURCE.

Ambient Compensated Single Phase Sizes 00-2 1/2

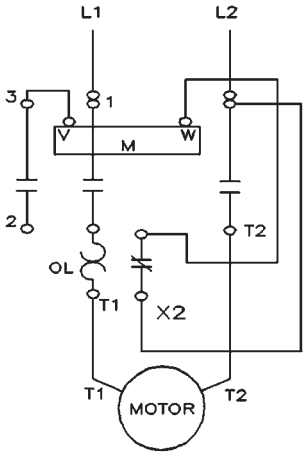

Ambient Compensated 3-Phase Sizes 00-2 1/2

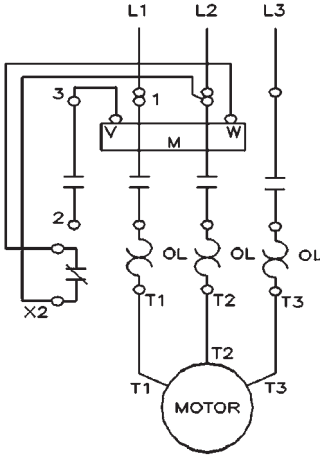

Ambient Compensated 3-Phase Sizes 3-4

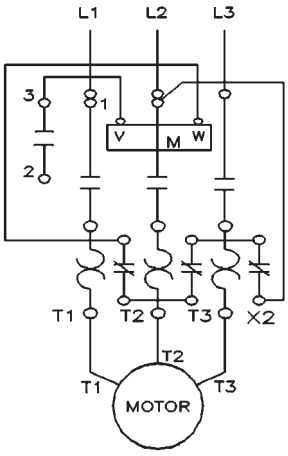

① Warning: The ESP200 Starter and Single Phase Motor must be wired as shown above. For L1, L2 do not use the middle terminal or hole.

② Full Load Amps (FLA): Adjustment of the ESP200 solid state overload relay accommodates the single phase motor.

3-Phase

Size 00–4①

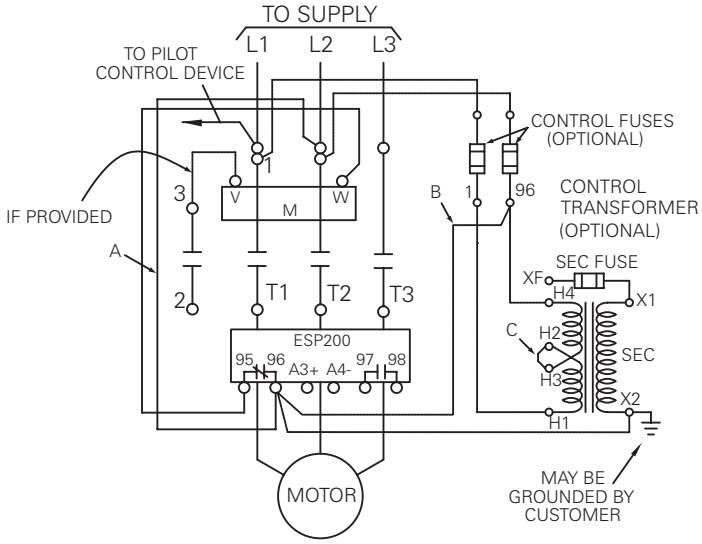

Size 5–8②

POWER WIRING:
USE 75°C COPPER WIRE ONLY.

SIZE	CT RATIO
5	300:5
6	600:5
7	750:5
8	1200:5

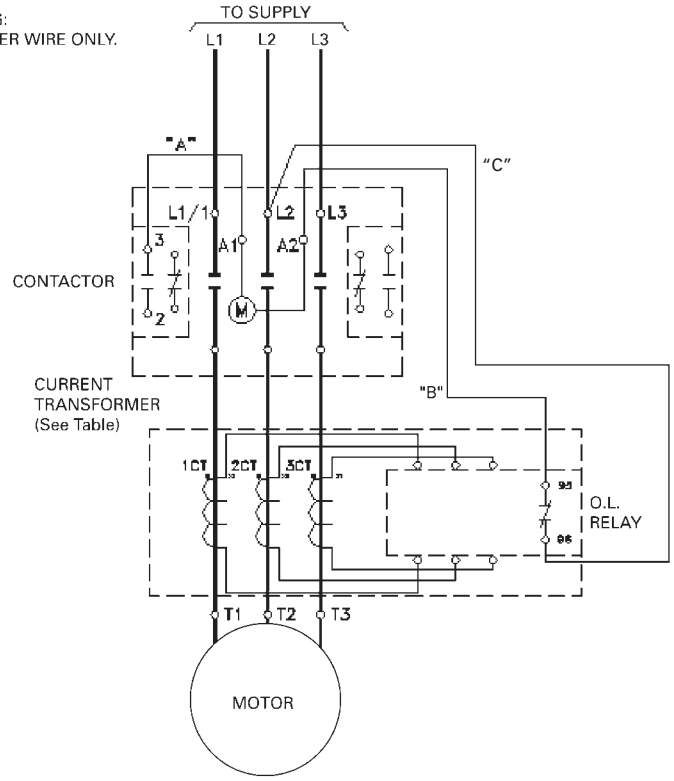

① Remove wire "C" if control transformer is used. For separate control voltage source, remove jumpers "A" and "B" and connect source to control fuse line terminals.

② Remove wire "C" if the contactor coil is to operate on a voltage other than line voltage or in a separate control source.

3-Phase Ambient Compensated Overload

Bimetal Overload
Sizes 0-1 3/4

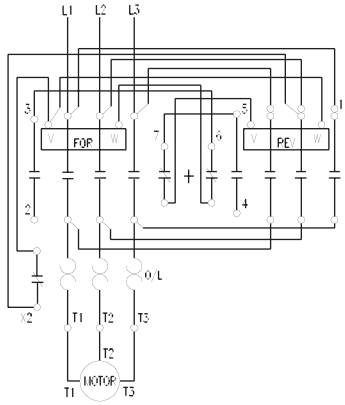

Bimetal Overload
Sizes 2-2 1/2

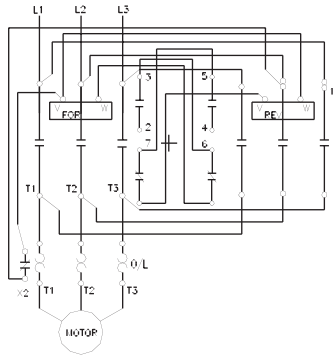

Bimetal Overload
Sizes 3-4

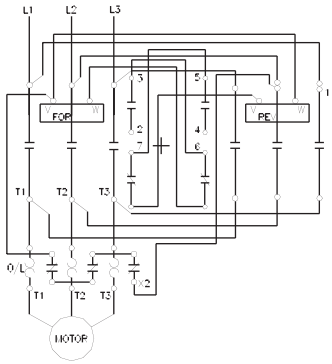

Single Phase Ambient Compensated Overload

3-Wire, 2-Pole Sizes 0-1 3/4

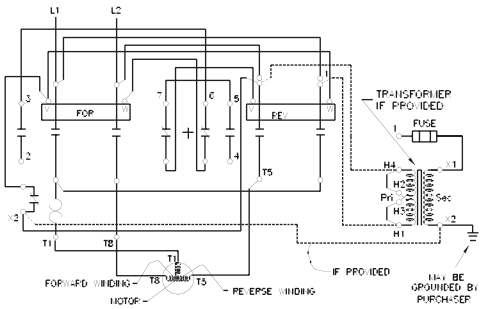

3-Phase Solid State Overload

3-Phase Reversing Magnetic Starter
Sizes 00–1¾

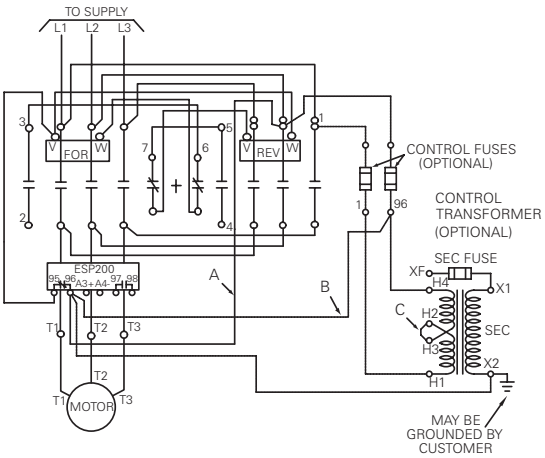

3-Phase Reversing Magnetic Starter
Sizes 2–4

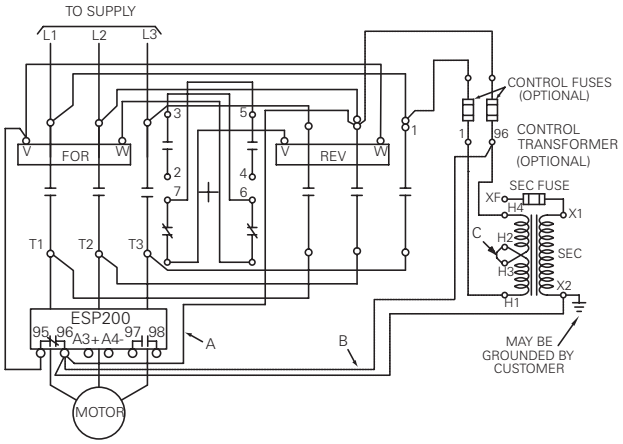

Solid State Overload
Sizes 5–6

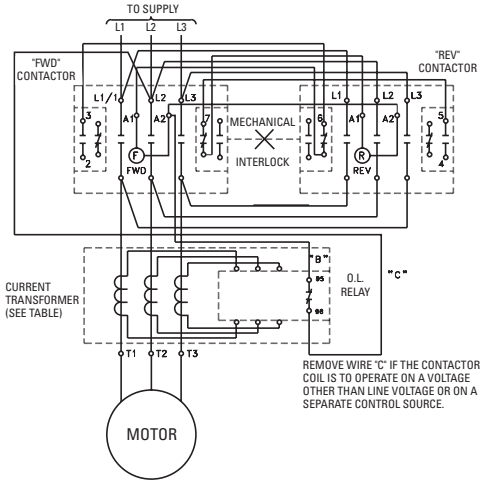

3-Phase Reversing Magnetic Starter
with DC Coil, Sizes 00–1¾

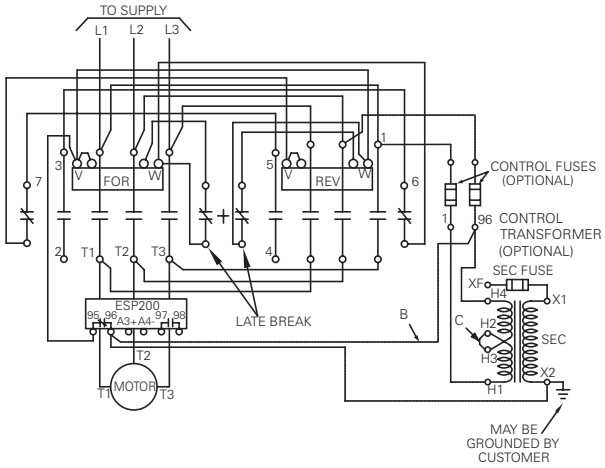

3-Phase Reversing Magnetic Starter
with DC Coil, Sizes 2–4

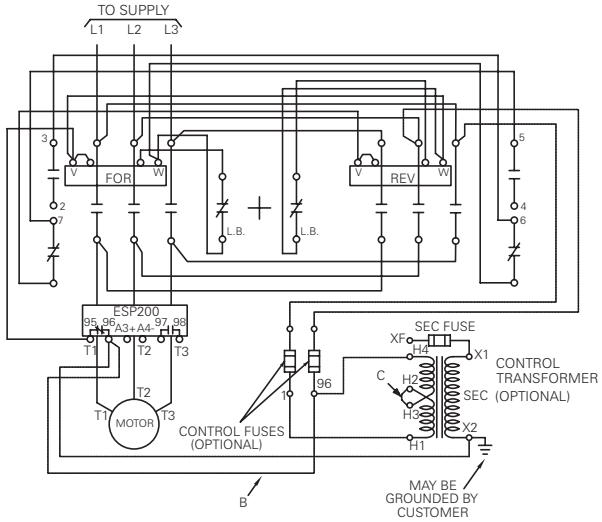

3-Phase

3-Phase Reversing Magnetic Starter
Sizes 00–1¾

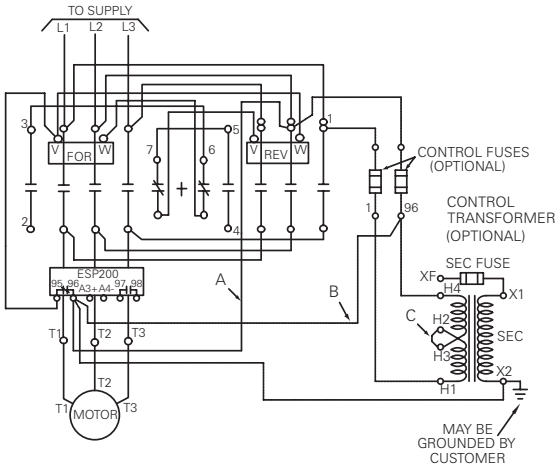

3-Phase Reversing Magnetic Starter
Sizes 2–4

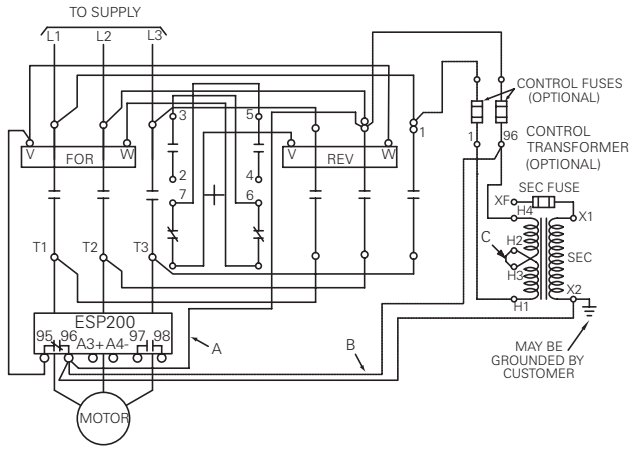

Size 5–6

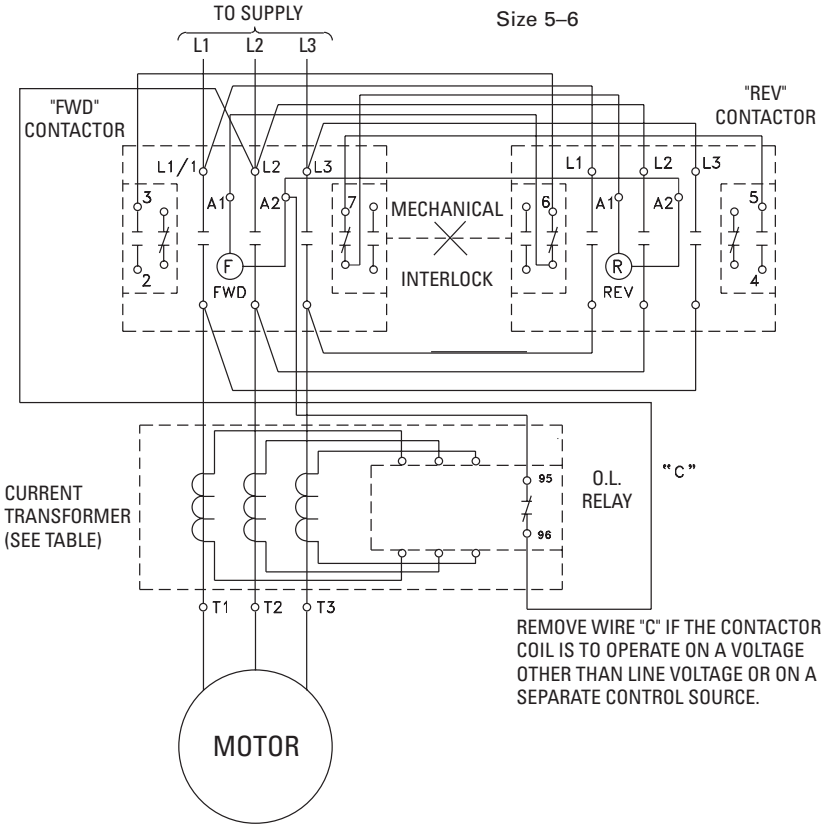

SIZE	CT RATIO
5	300:5
6	600:5

1 Winding Constant Horsepower Size 0–1³/₄

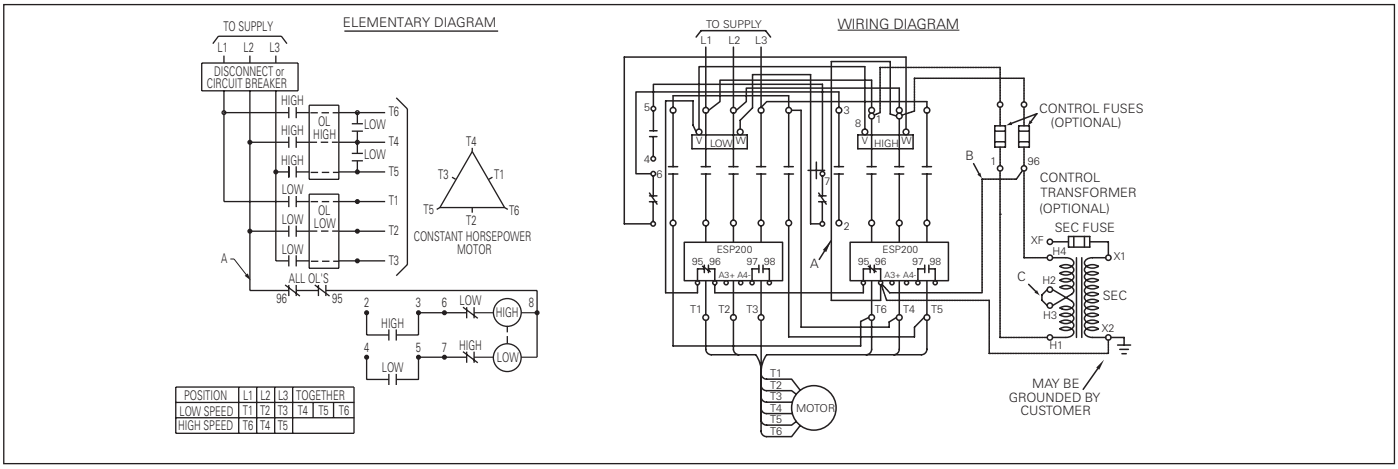

1 Winding Constant Horsepower Size 2–4

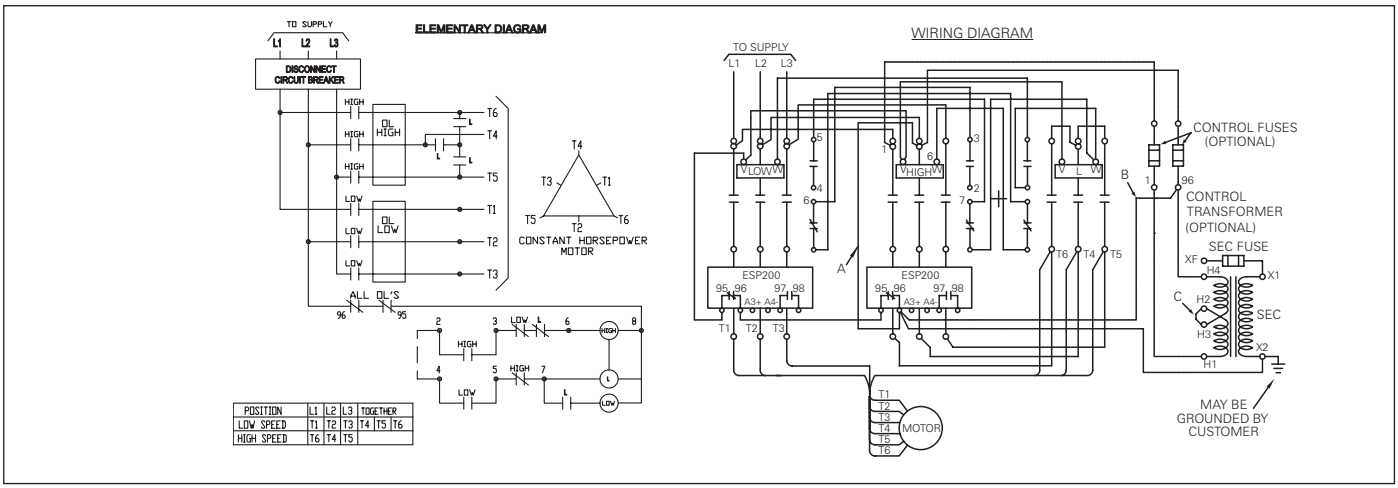

1 Winding Constant or Variable Torque Size 0–1³/₄

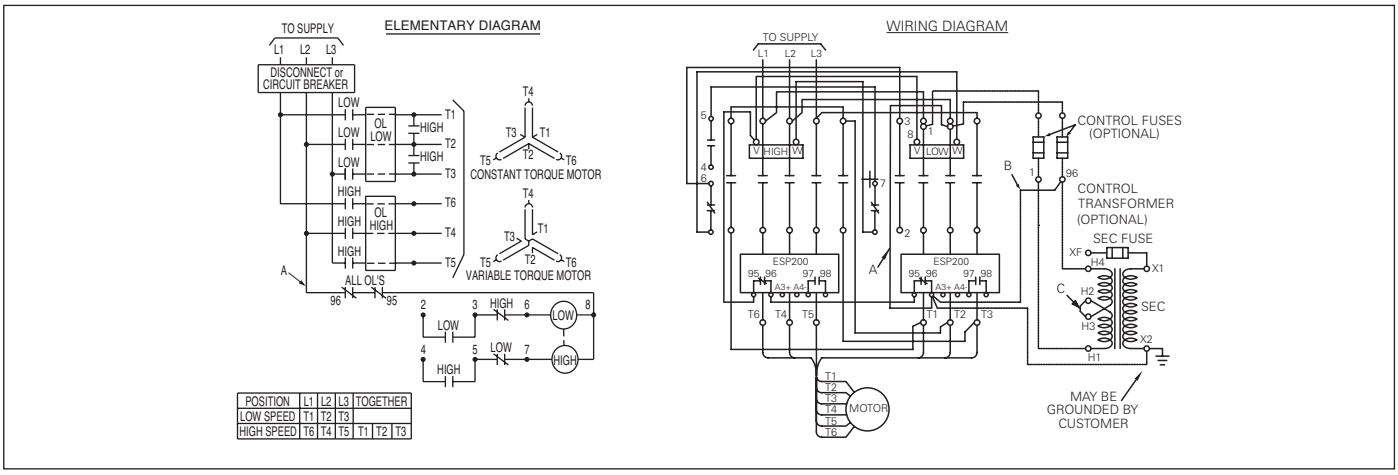

Note: For separate control voltage source, remove jumpers "A" and "B" and connect source to control fuse terminal. Remove jumper "C" if control transformer is used.

1 Winding Constant or Variable Torque Size 2–4

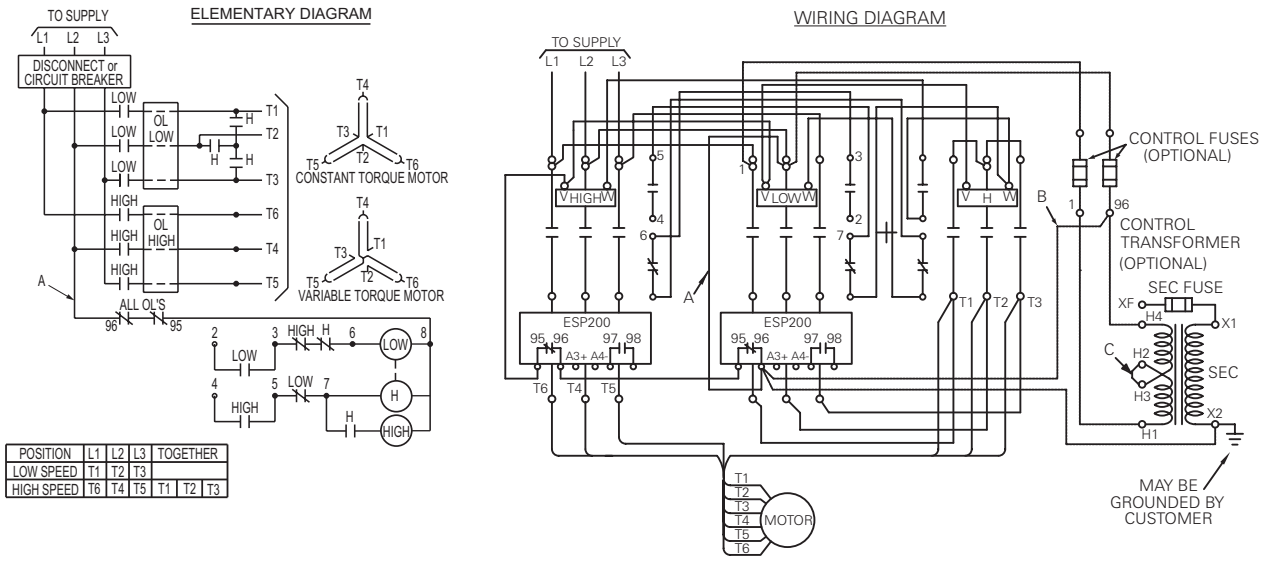

POSITION	L1	L2	L3	TOGETHER		
LOW SPEED	T1	T2	T3			
HIGH SPEED	T6	T4	T5	T1	T2	T3

D68784002

2 Winding Constant Horsepower & 2 Winding Constant or Variable Torque Size 0–4

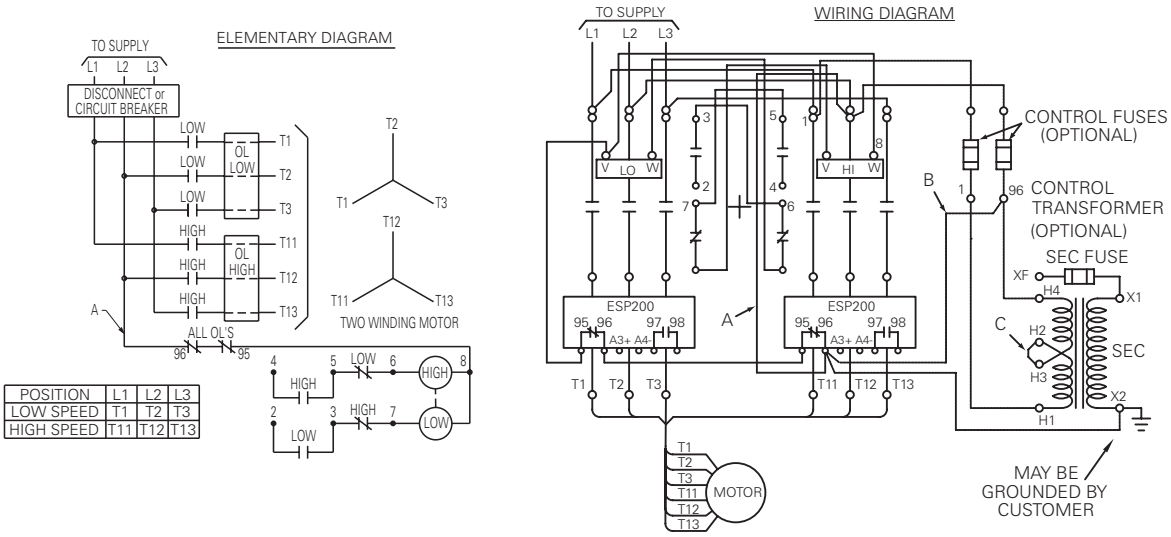

POSITION	L1	L2	L3
LOW SPEED	T1	T2	T3
HIGH SPEED	T11	T12	T13

D68786001

Note: For separate control voltage source, remove jumpers "A" and "B" and connect source to control fuse terminal. Remove jumper "C" if control transformer is used.

Part Winding

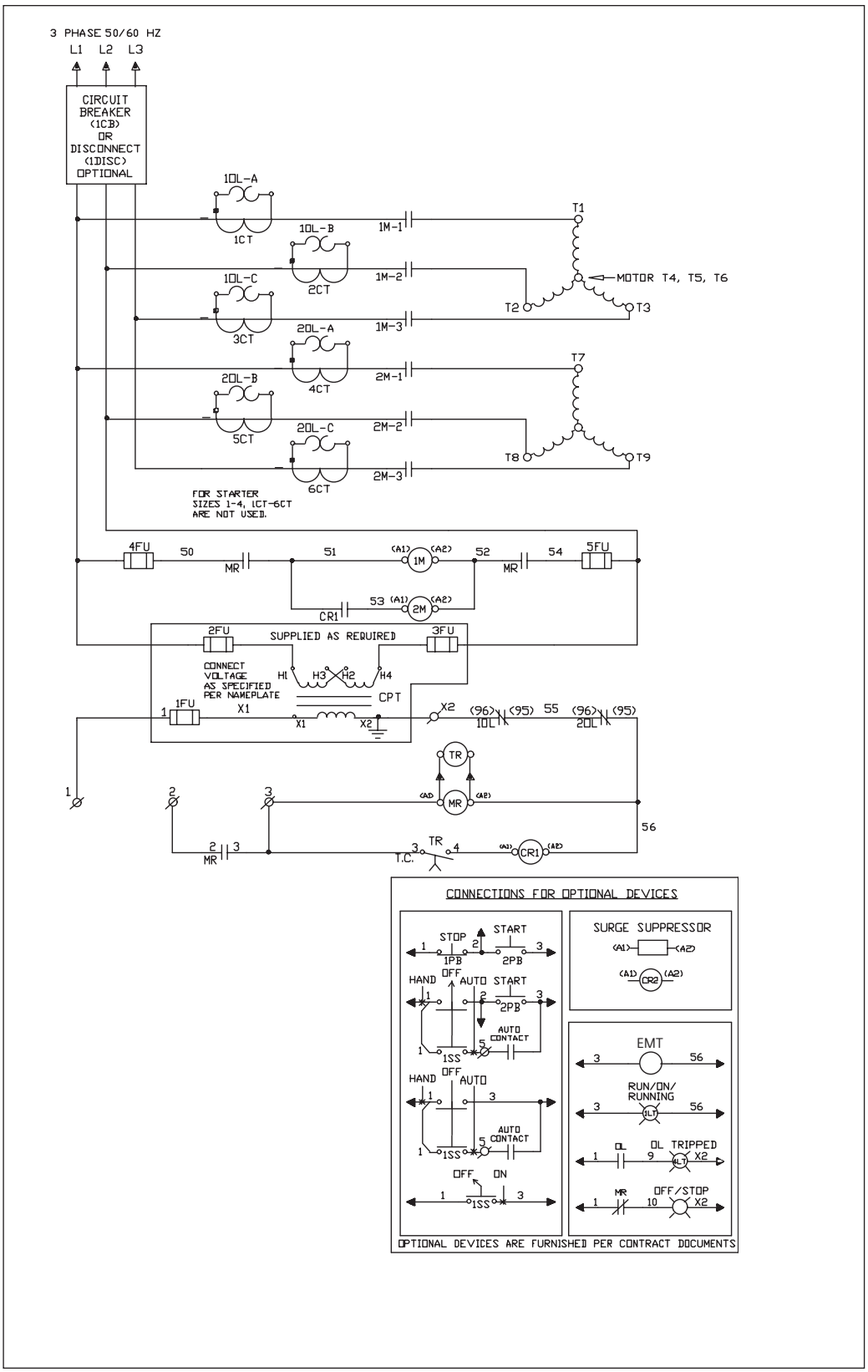

Auto Transformer

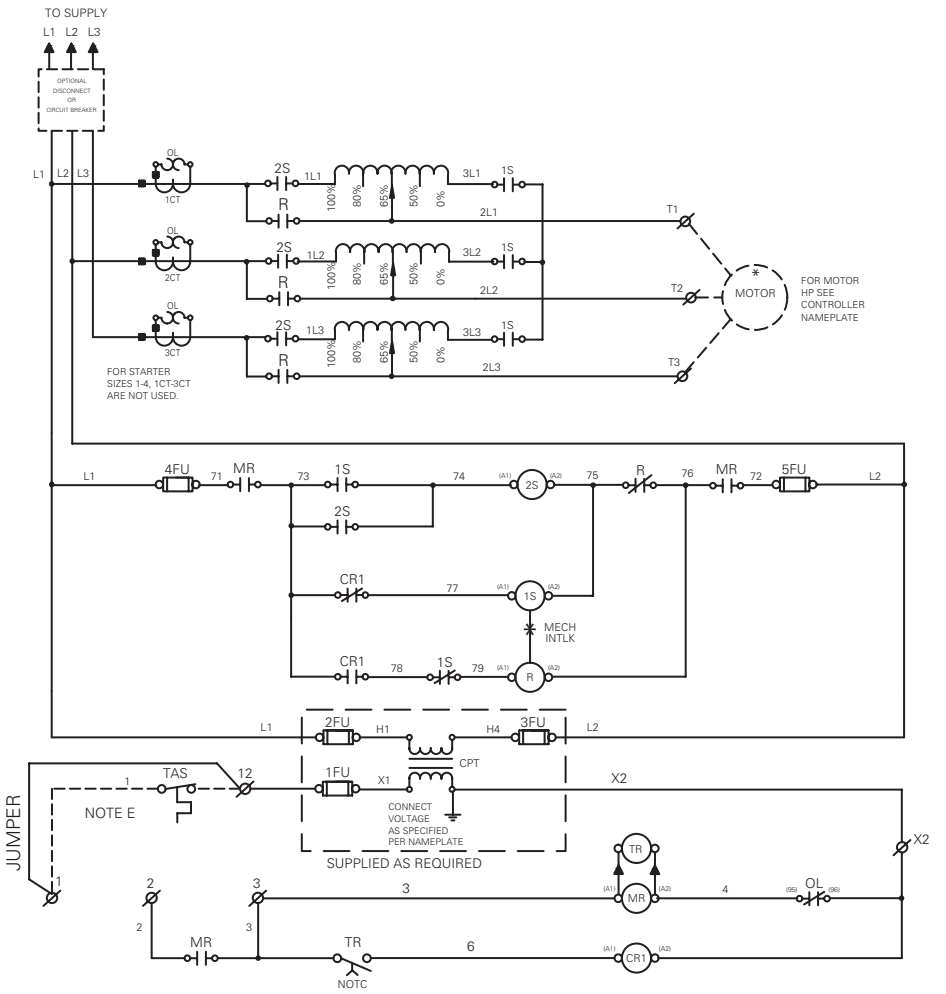

Note E:
Remove jumper if thermal protection switch is provided.

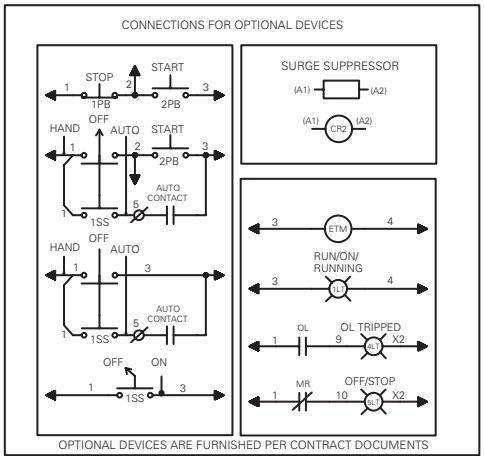

Wye Delta (Open Transition)

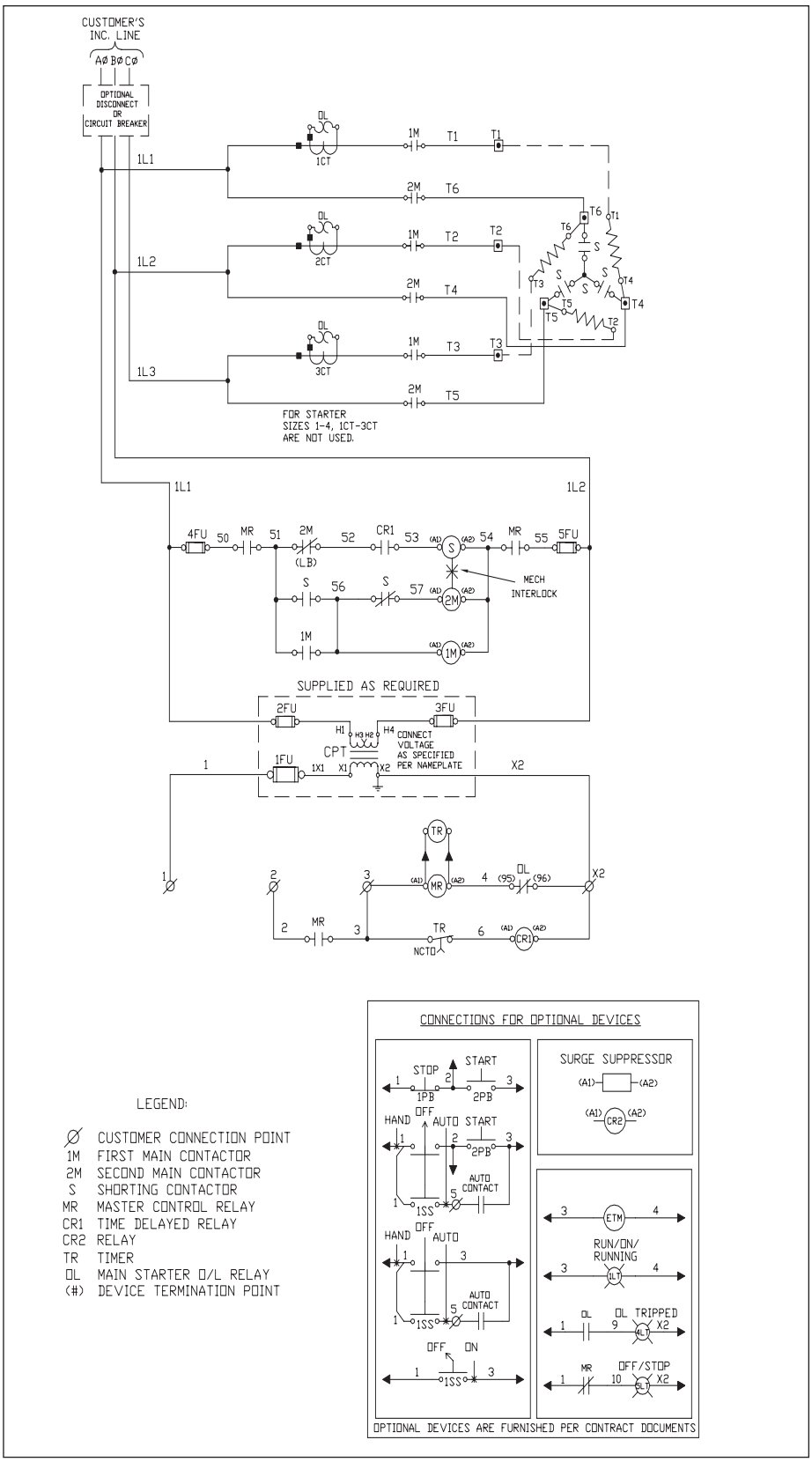

Wye Delta (Closed Transition)

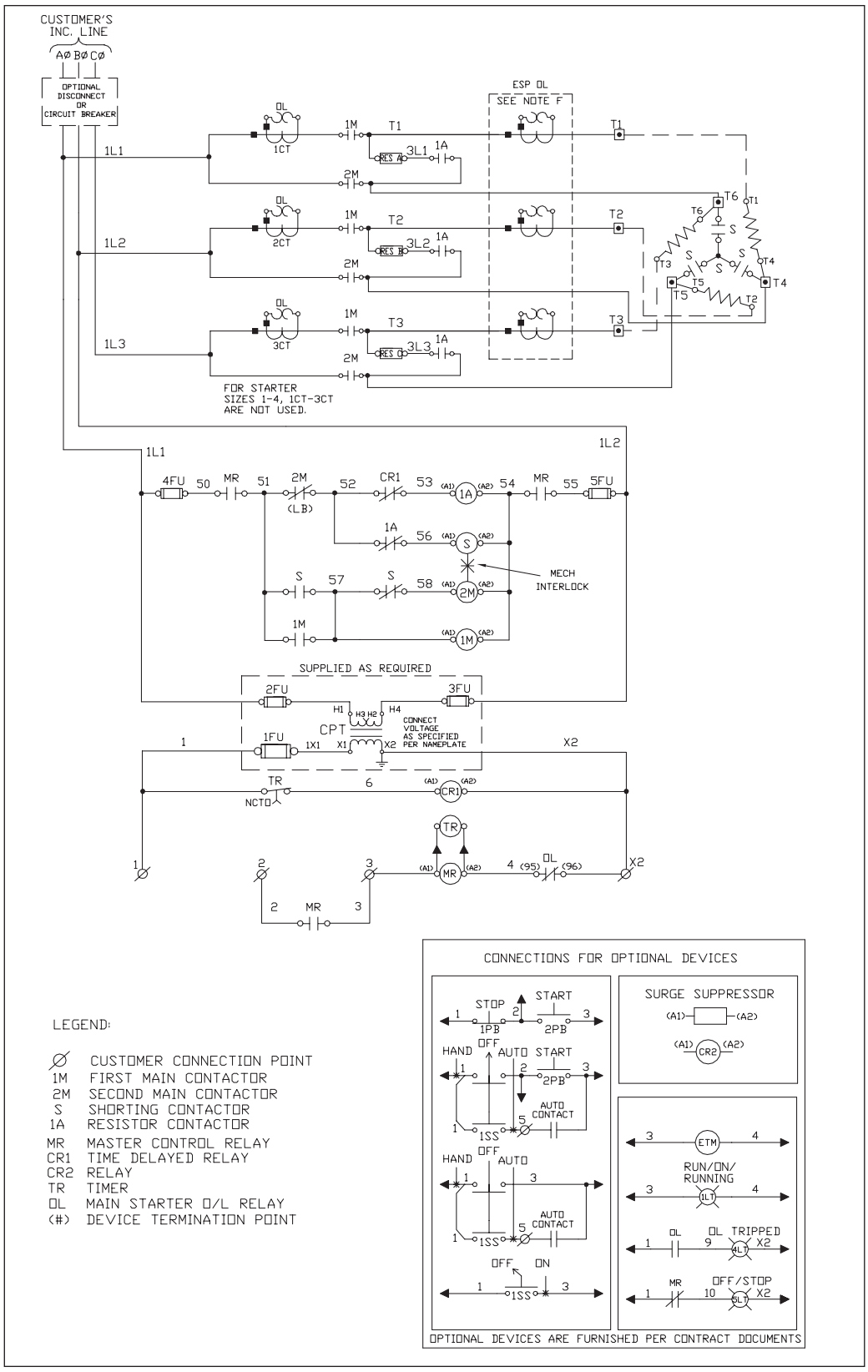

LEGEND:

Ø	CUSTOMER CONNECTION POINT
1M	FIRST MAIN CONTACTOR
2M	SECOND MAIN CONTACTOR
S	SHORTING CONTACTOR
1A	RESISTOR CONTACTOR
MR	MASTER CONTROL RELAY
CR1	TIME DELAYED RELAY
CR2	RELAY
TR	TIMER
OL	MAIN STARTER O/L RELAY
(#)	DEVICE TERMINATION POINT

3-Phase Magnetic Contactors and Reversing Contactors

3-Phase Contactors—Size 00–4

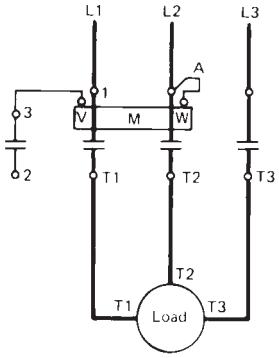

3-Phase Reversing Contactors—Size 00–4

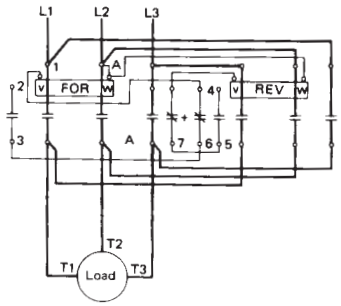

3-Phase Contactors—Size 5, 6

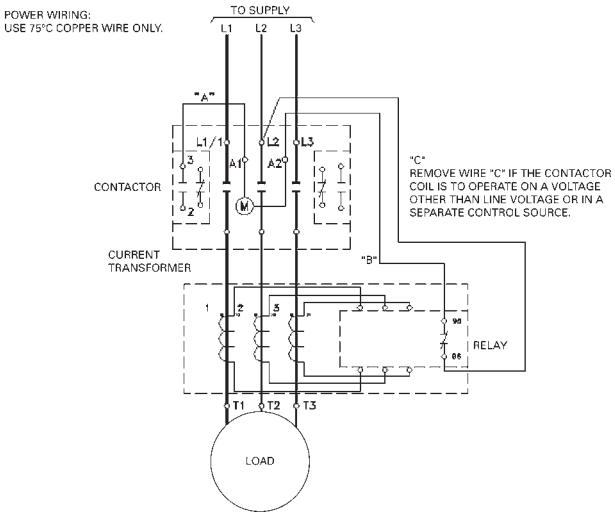

3-Phase Reversing Contactors—Size 5, 6

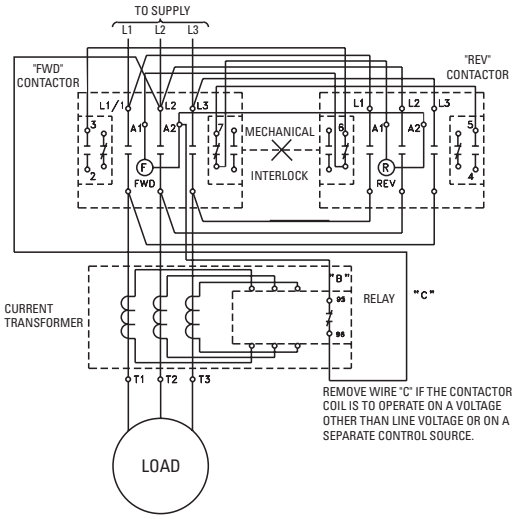

Single Phase Magnetic Contactors and Reversing Contactors

Single Phase Contactors—Size 00–4

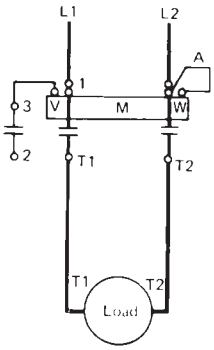

Single Phase Reversing Contactors—Size 00–1P

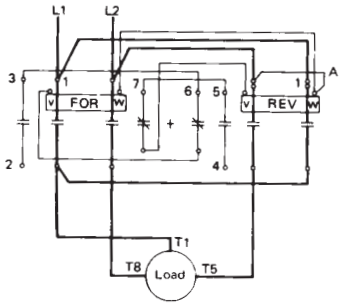

Standard Duplex Pump Panel (92)

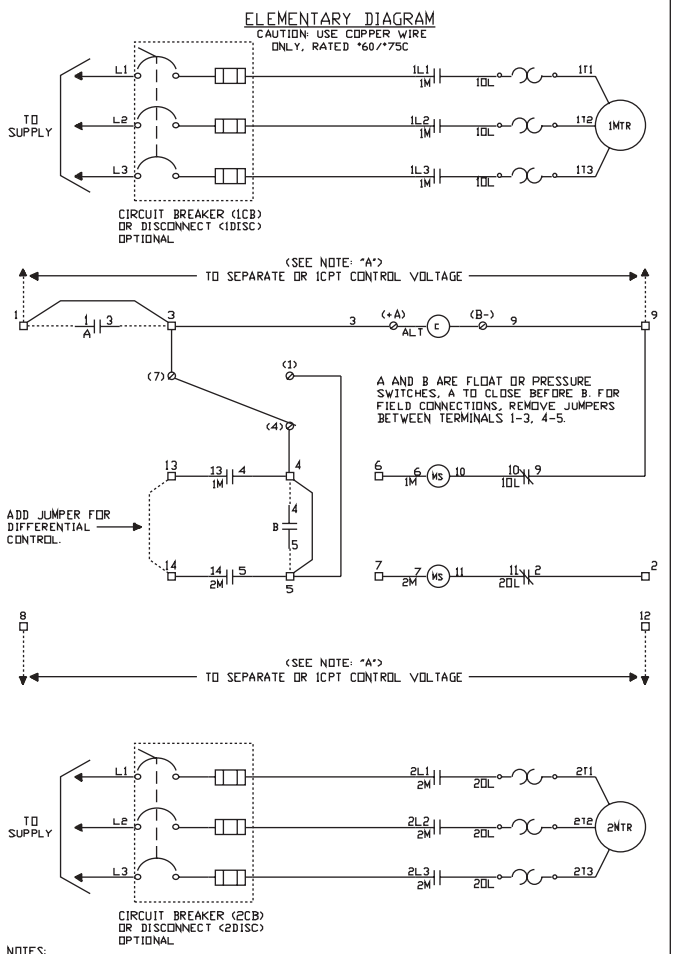

NOTES:
A. FOR SEPARATE OR CPT CONTROL VOLTAGE SOURCE: CONNECT PER DOTTED LINES OR TO 1 AND 2 CPT PRIMARIES PER FACTORY OR FIELD MODIFICATIONS.
B. FOR PROTECTION OF INTERNAL CONTROL CIRCUIT CONDUCTORS IN ACCORDANCE WITH THE N.E.C., USE FUSE KIT 49MAFB4.
C. TO USE THIS CONTROLLER W/O SELECTOR SWITCHES, JUMPER BETWEEN THE FOLLOWING PAIRS OF TERMINALS 4-6, 5-7, AND 9-2.
D. FOR TWO POSITION SELECTOR SWITCHES, WIRE AS SHOWN ALSO ADD JUMPER BETWEEN TERMINALS 9-2.
E. LINE OR SEPARATE SOURCE CONNECTIONS TO TERMINALS 8 AND 12 ARE REQUIRED ONLY WHEN THREE POSITION SELECTOR SWITCH IS BUILT IN.

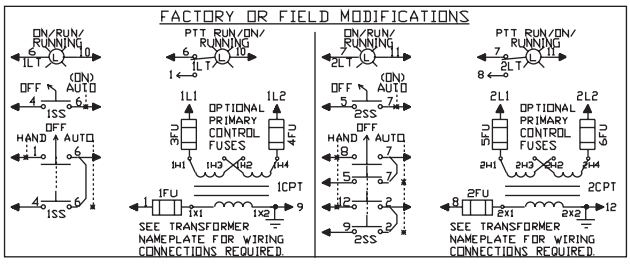

TB LAYOUT (REF) | 1 | 2 | 3 | 4 | 5 | 6 | 7 | 8 | 9 | 12 | 13 | 14 |

Duplex Panel w/o alternator (95)

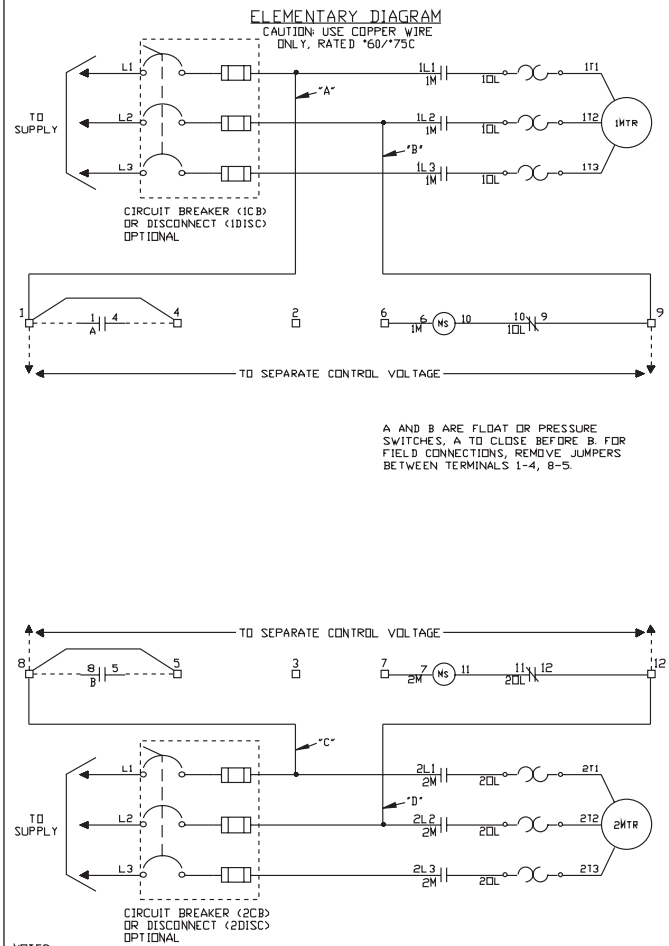

NOTES:
A. FOR SEPARATE OR CPT CONTROL VOLTAGE SOURCE, REMOVE JUMPERS "A","B","C", AND "D" AND CONNECT PER DOTTED LINES OR TO 1 AND 2 CPT PRIMARIES PER FACTORY OR FIELD MODIFICATIONS.
B. FOR PROTECTION OF INTERNAL CONTROL CIRCUIT CONDUCTORS IN ACCORDANCE WITH THE N.E.C., USE FUSE KIT 49MAFB4.
C. TO USE THIS CONTROLLER W/O SELECTOR SWITCHES, JUMPER BETWEEN THE FOLLOWING PAIRS OF TERMINALS 4-6, 5-7.

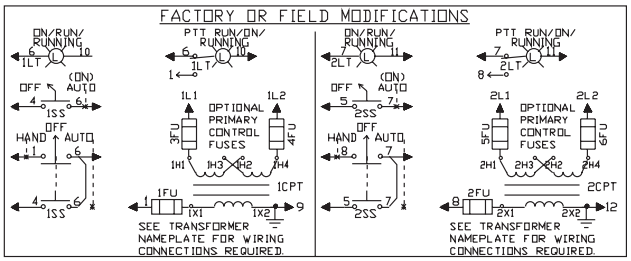

Duplex Panel with Relay Alternation (93)

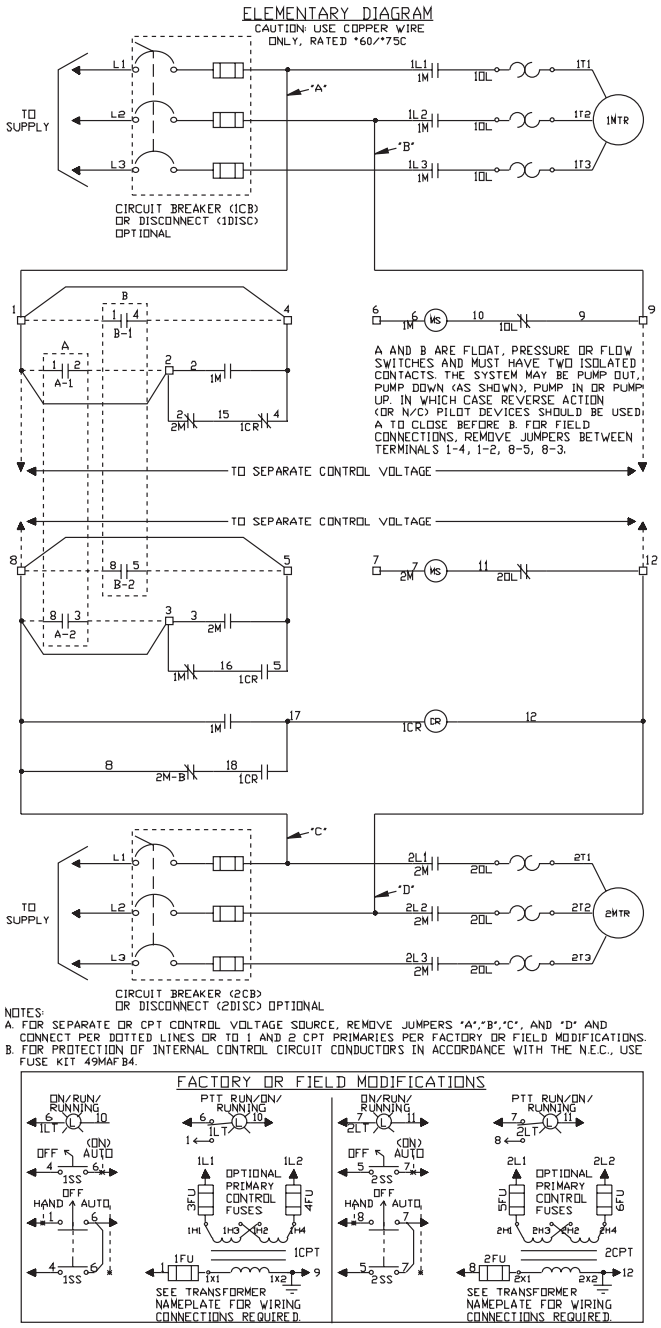

Duplex Panel with Lead Pump Transfer Switch (94)

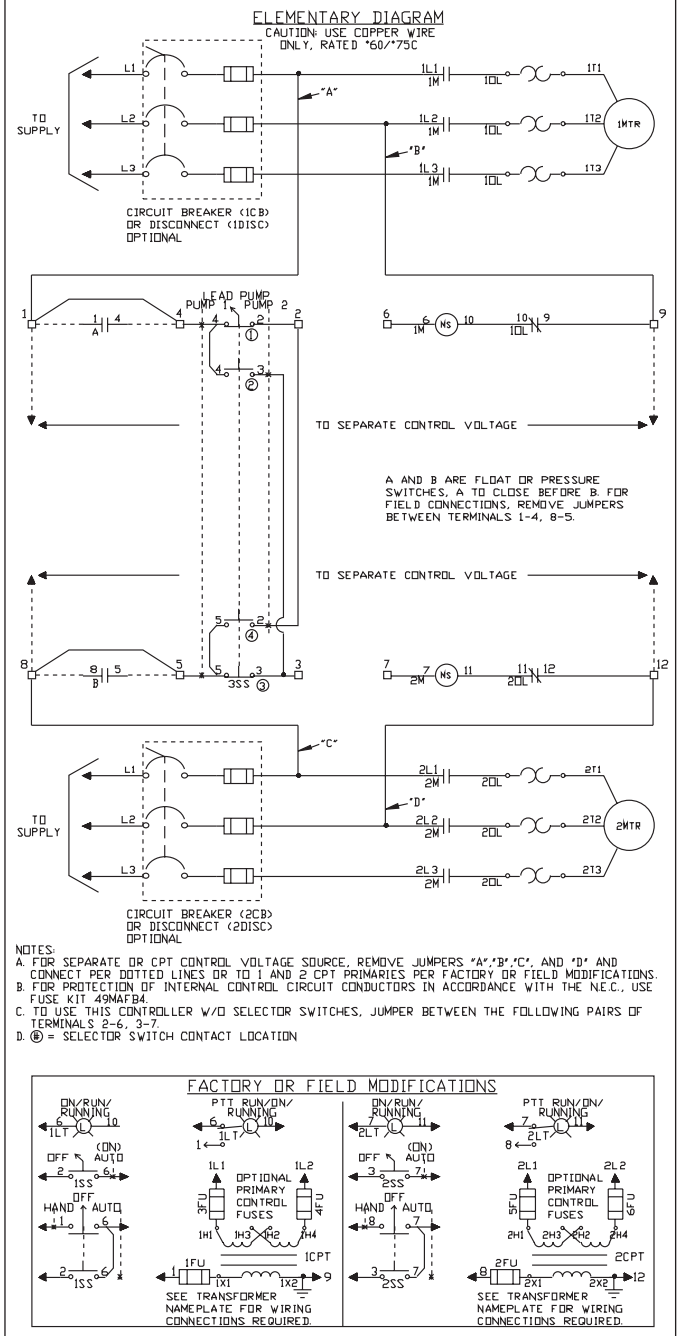

Class 82 Pump Panel

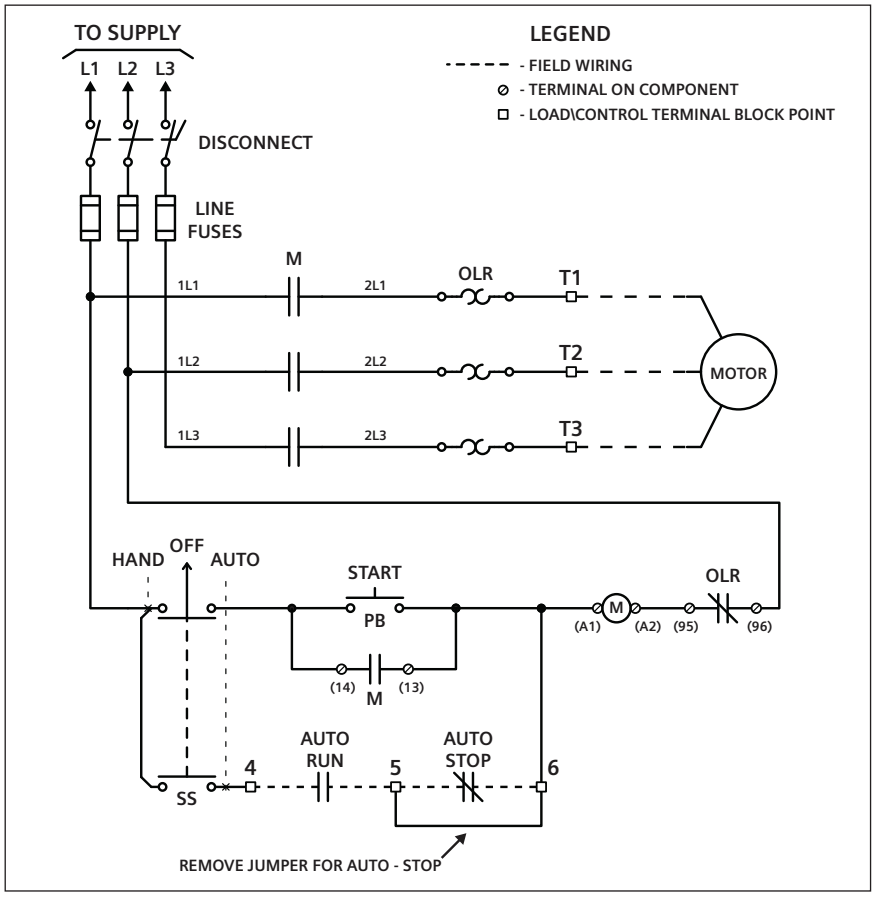

Standard Class 87 Pump Panel

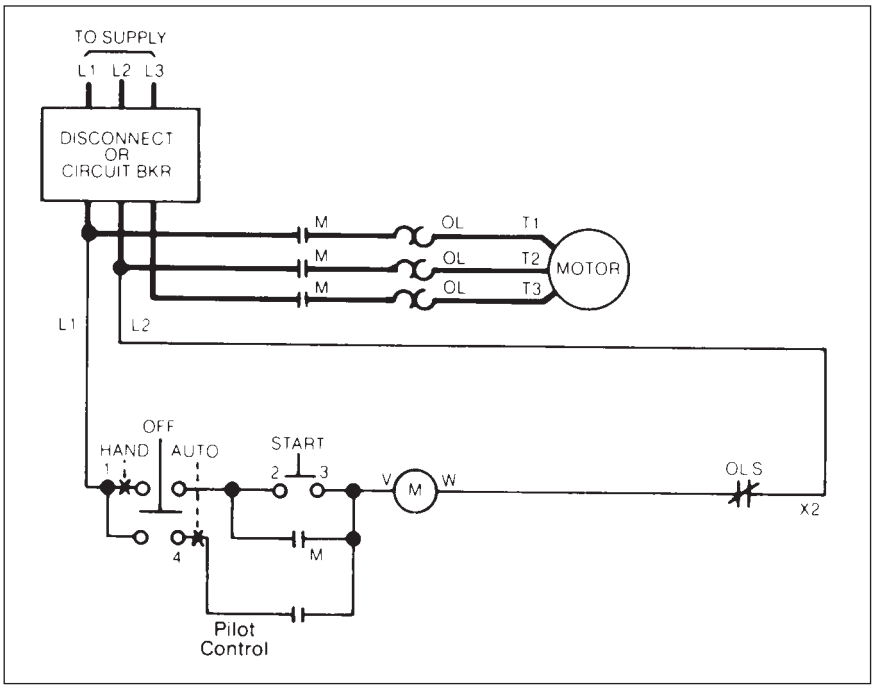

LEN00B003 (20A 3 Pole)

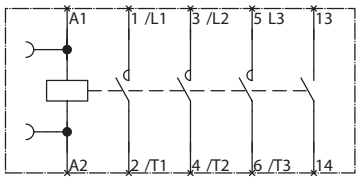

LEN00B004 (20A 4 Pole)

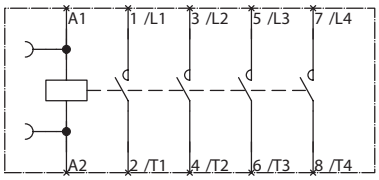

LEN00C003 (30A 3 Pole)

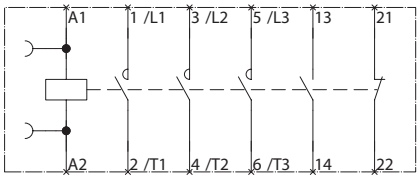

LEN00C004 (30A 4 Pole)

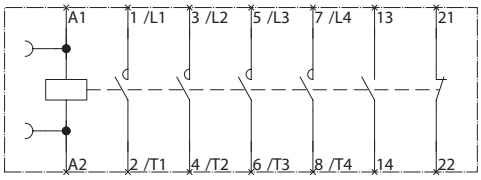

LEN00D003 (60A 3 Pole)
LEN00E003 (100A 3 Pole)

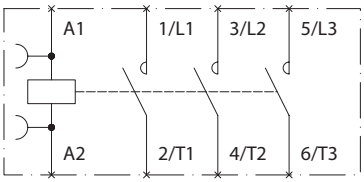

LEN00F003 (200A 3 Pole)
LEN00G003 (300A 3 Pole)
LEN00H003 (400A 3 Pole)

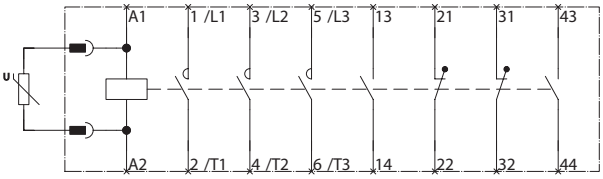

LCE00C (30A 2-12 Pole)

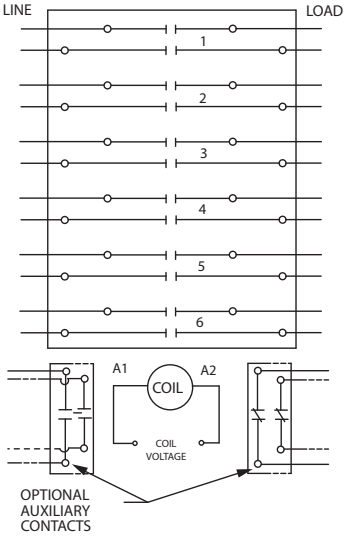

Optional Pilot Devices for Electrically Held Contactor

ON and OFF Push buttons

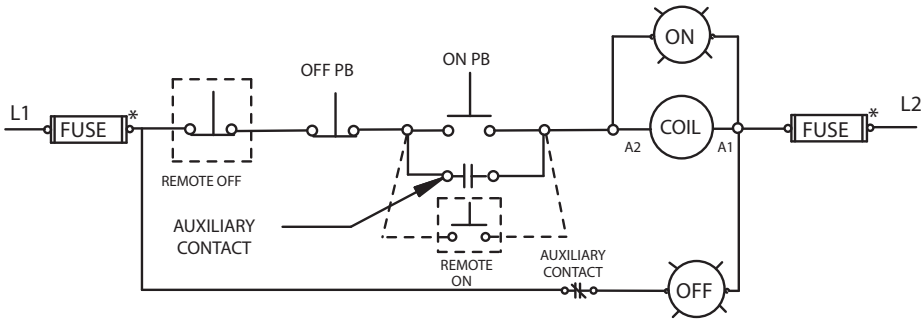

OFF-ON or OFF-AUTO Selector Switch

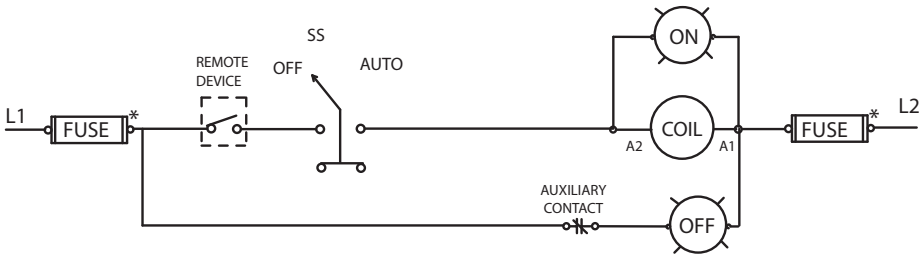

OFF-ON-AUTO HAND-OFF-AUTO Selector Switch

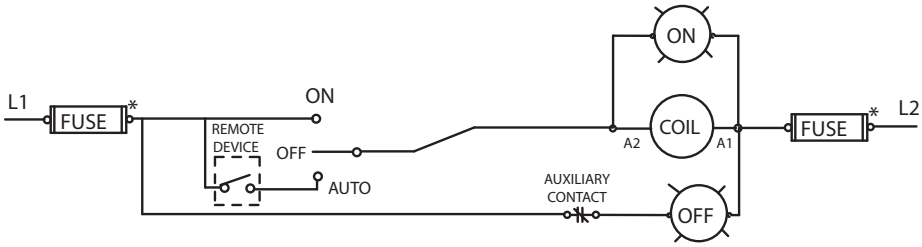

* -- IF USED

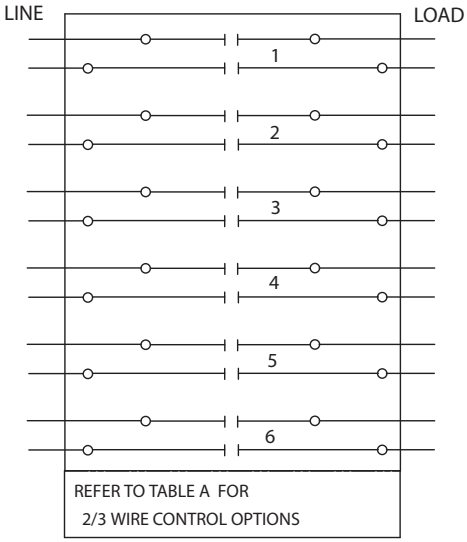
LINE
LOAD
1
2
3
4
5
6
REFER TO TABLE A FOR
2/3 WIRE CONTROL OPTIONS

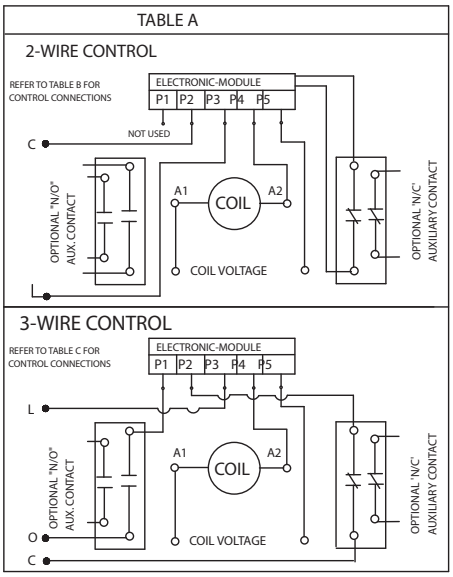
TABLE A
2-WIRE CONTROL
REFER TO TABLE B FOR CONTROL CONNECTIONS
ELECTRONIC-MODULE
P1 P2 P3 P4 P5
NOT USED
C
L
OPTIONAL "N/O" AUX. CONTACT
A1
COIL
A2
COIL VOLTAGE
OPTIONAL "N/C" AUXILIARY CONTACT
3-WIRE CONTROL
REFER TO TABLE C FOR CONTROL CONNECTIONS
ELECTRONIC-MODULE
P1 P2 P3 P4 P5
L
O
C
OPTIONAL "N/O" AUX. CONTACT
A1
COIL
A2
COIL VOLTAGE
OPTIONAL "N/C" AUXILIARY CONTACT

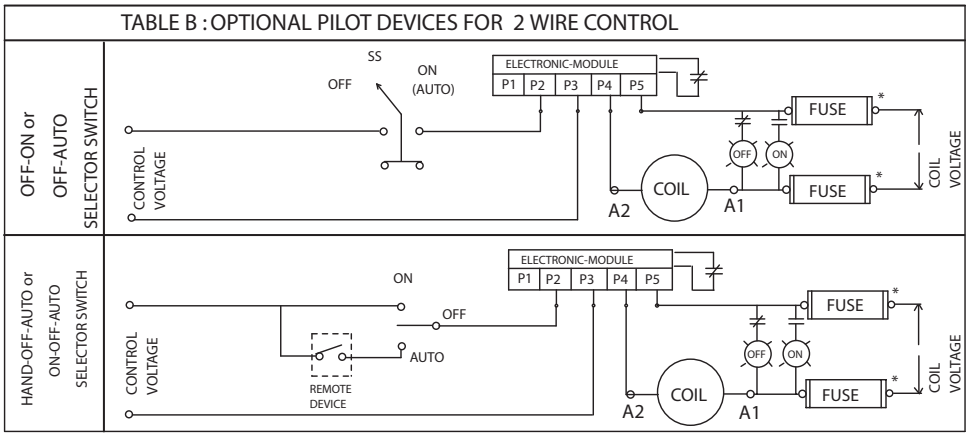
TABLE B : OPTIONAL PILOT DEVICES FOR 2 WIRE CONTROL
OFF-ON or OFF-AUTO SELECTOR SWITCH
SS
OFF
ON (AUTO)
ELECTRONIC-MODULE
P1 P2 P3 P4 P5
CONTROL VOLTAGE
FUSE
OFF
ON
COIL
A2
A1
FUSE
COIL VOLTAGE
HAND-OFF-AUTO or ON-OFF-AUTO SELECTOR SWITCH
ON
OFF
AUTO
REMOTE DEVICE
ELECTRONIC-MODULE
P1 P2 P3 P4 P5
CONTROL VOLTAGE
FUSE
OFF
ON
COIL
A2
A1
FUSE
COIL VOLTAGE

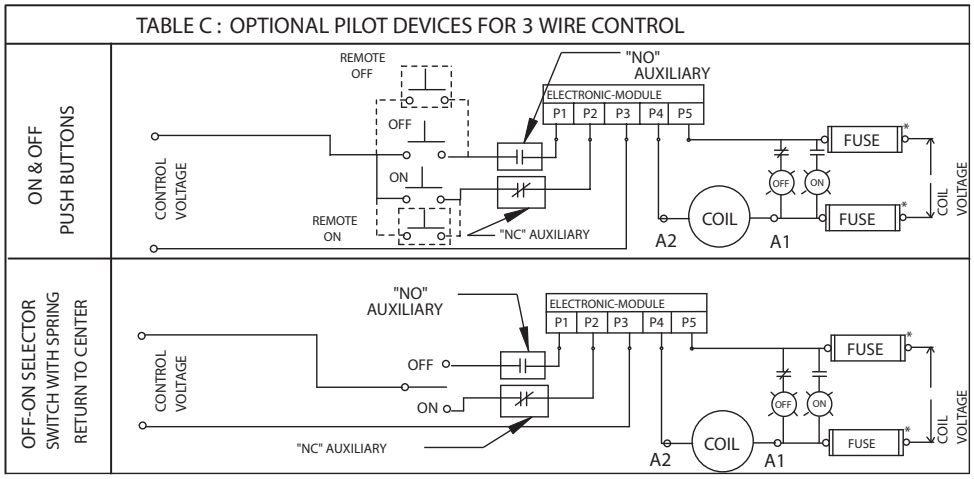
TABLE C : OPTIONAL PILOT DEVICES FOR 3 WIRE CONTROL
ON & OFF PUSH BUTTONS
REMOTE OFF
"NO" AUXILIARY
ELECTRONIC-MODULE
P1 P2 P3 P4 P5
OFF
ON
CONTROL VOLTAGE
REMOTE ON
"NC" AUXILIARY
FUSE
OFF
ON
COIL
A2
A1
FUSE
COIL VOLTAGE
OFF-ON SELECTOR SWITCH WITH SPRING RETURN TO CENTER
"NO" AUXILIARY
ELECTRONIC-MODULE
P1 P2 P3 P4 P5
CONTROL VOLTAGE
OFF
ON
"NC" AUXILIARY
FUSE
OFF
ON
COIL
A2
A1
FUSE
COIL VOLTAGE

* -- IF USED

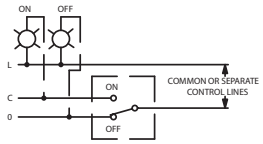

TYPICAL OFF-ON SELECTOR SWITCH

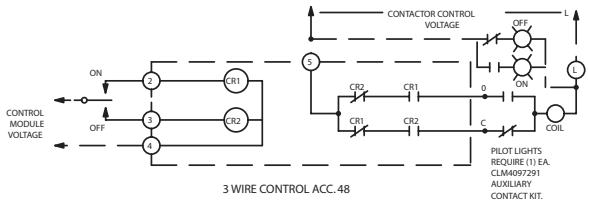

3 WIRE CONTROL ACC. 48

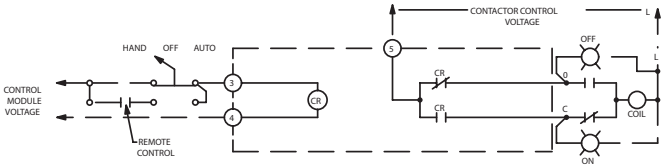

2 WIRE CONTROL ACC. 47

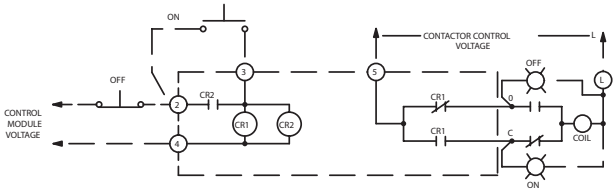

ON-OFF (FORM 3) CONTROL ACC. 49

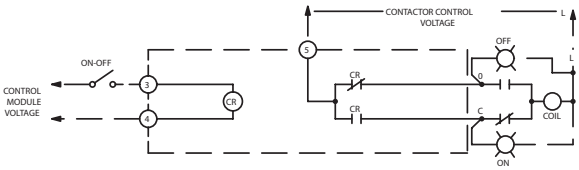

2 WIRE CONTROL ACC. 47

CONNECTIONS TO CONTROL MODULES	
MODULE TERMINAL	CONNECT TO:
1	NOT USED
2	CONT. STATION FOR ACC. 48 & 49
3	CONT. STATION FOR ACC. 47,48 & 49
4	MODULE CONTROL VOLTAGE *
5	CONTACTOR CONTROL VOLTAGE
O	TERMINAL O ON CONTACTOR
C	TERMINAL C ON CONTACTOR

* FOR 24 VDC CONTROL MODULES CONNECT TERMINAL 4 TO NEGATIVE (-)

Mechanically Latched, CLM 30–200 Amps①

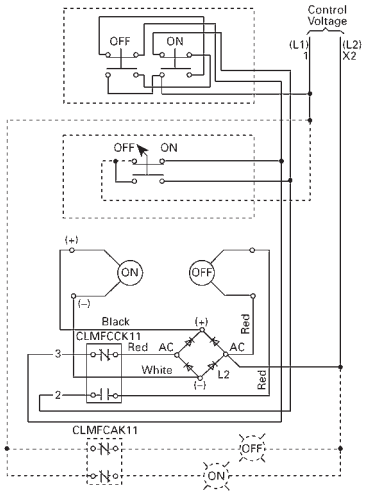

Connection Diagram for Common/Separate Control with Momentary Pushbutton or ON-OFF Selector Switch **CLMOC**, **CLMOD**, **CLMOE**, and **CLMOF**

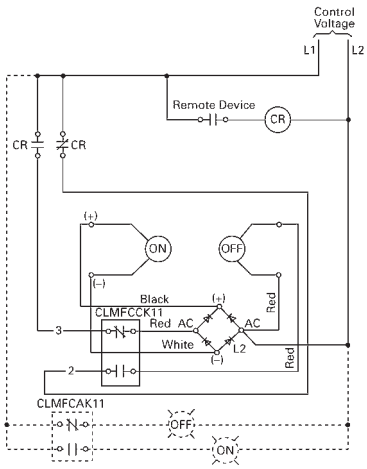

Connection for 2-Wire Control **CLMOC**, **CLMOD**, **CLMOE**, and **CLMOF**

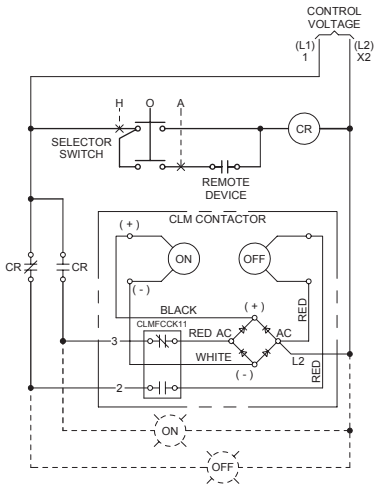

Connection for Hand/Off/Auto Control **CLMOC**, **CLMOD**, **CLMOE**, and **CLMOF**

Mechanically Latched Type CLM 300 and 400 Amp①

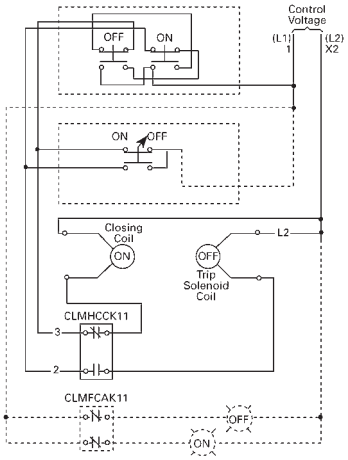

Connection Diagram for Common/Separate Control with Momentary Pushbutton or ON-OFF Selector Switch **CLMOG** and **CLMOH**

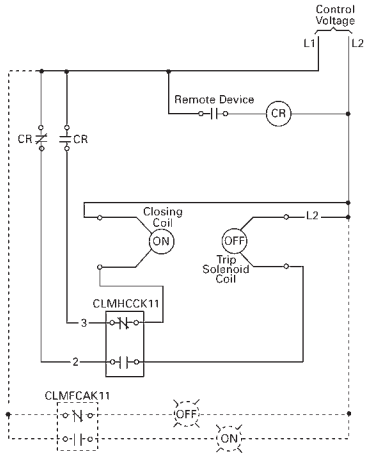

Connection for 2-Wire Control **CLMOG** and **CLMOH**

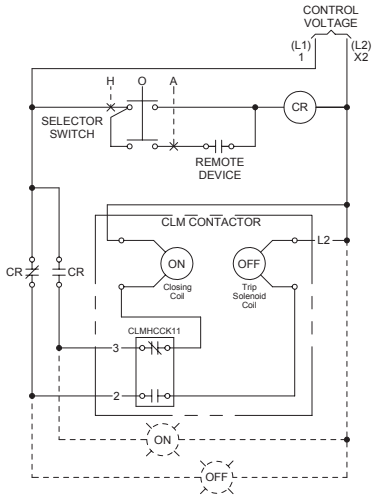

Connection for Hand/Off/Auto Control **CLMOG** and **CLMOH**

① Control relay is required for 2-wire and Hand/Off/Auto Control, as shown in diagram.

Voltage Letter A①③

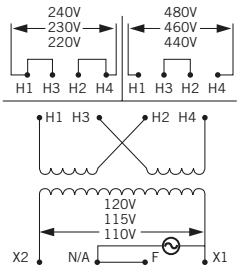

Voltage Letter B②③

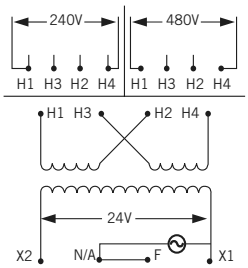

Voltage Letter C②③

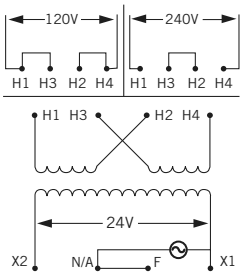

Voltage Letter D②

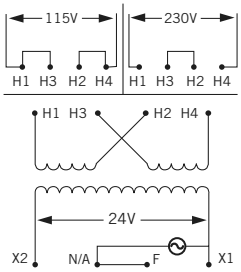

Voltage Letter E①③

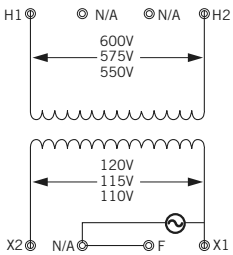

Voltage Letter F①

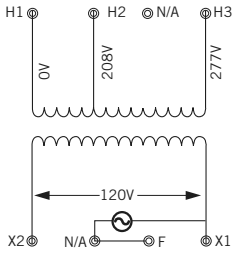

Voltage Letter G①

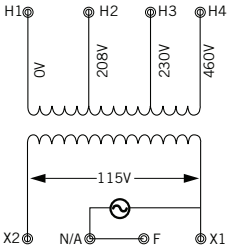

Voltage Letter H

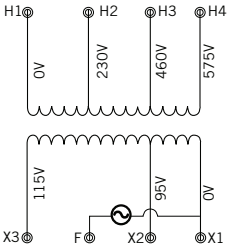

Voltage Letter I

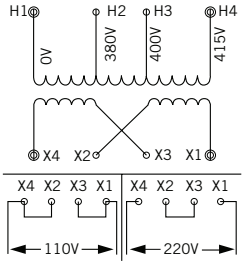

Voltage Letter J②③

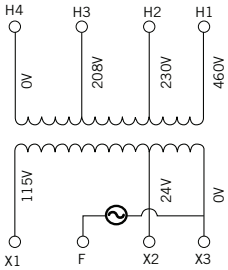

Voltage Letter L

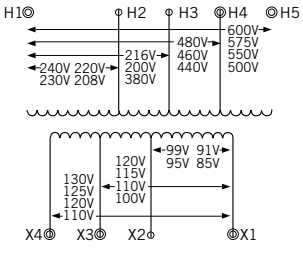

Voltage Letter M①

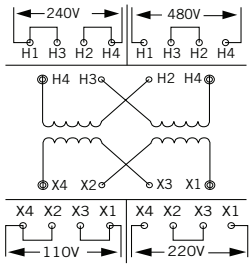

Voltage Letter P

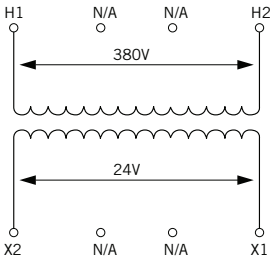

① Includes secondary fuse clips on sizes 50-750VA
② Includes secondary fuse clips on sizes 50-500VA
③ Secondary fuse clips are not included on MTG transformers.

Overview

3RW30

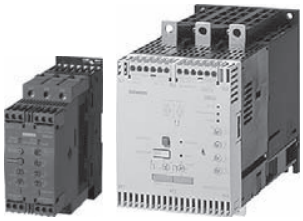

3RW40

3RW44

Class 73/74 Enclosed

		Order No.	Page
For operation in the control cabinet			
3RW soft starters for standard applications			
	• Application areas - Fans - Building/construction machines - Escalators - Air conditioning systems - Assembly lines - Operating mechanisms - Pumps - Presses - Transport systems - Fans - Compressors and coolers		
3RW30 soft starters	• SIRIUS 3RW30 soft starters for soft starting and smooth ramp-down of three-phase asynchronous motors • Performance range of up to 75 Hp (at 460 V)	**3RW30**	17-198
3RW40 soft starters	• SIRIUS 3RW40 soft starters with the integral functions - Solid-state motor overload and intrinsic device protection and - Adjustable current limiting for the soft starting and stopping of three-phase asynchronous motors • Performance range of up to 300 Hp (at 460 V)	**3RW40**	17-202
3RW soft starters for high-feature applications			
	• Application areas - Pumps - Compressors - Industrial refrigerating systems - Conveying systems - Machine tools - Fans - Cooling systems - Water transport - Hydraulics - Mills		
3RW44 soft starters	• In addition to soft starting and soft ramp-down, the solid-state SIRIUS 3RW44 soft starters provide numerous functions for higher-level requirements • Performance range - Up to 900 Hp (at 460 V) in inline circuit and - Up to 1600 Hp (at 460 V) in inside-delta circuit	**3RW44**	17-210
For enclosed applications			
Enclosures in NEMA 1, 3, 4, & 12 types UL/CSA listed	• Complete starter includes 3RW40 or 3RW44 and CPT • Performance Range of up to 600 Hp (at 460 V)	**Class 73/74**	17-277
	• Combination options include circuit breaker or fusible disconnect		
	• Application areas: - Compressors - Pumps - Stamping presses - Cooling towers - Molding and extruding - Chippers and debarkers - Lumber processing - Pulp & paper processing - Conveyors - Textiles - HVAC		

Overview

The advantages of the SIRIUS soft starters at a glance:

- Soft starting and smooth ramp-down[1)]
- Stepless starting
- Reduction of current peaks
- Avoidance of mains voltage fluctuations during starting
- Reduced load on the power supply network
- Reduction of the mechanical load in the operating mechanism
- Considerable space savings and reduced wiring compared with conventional starters
- Maintenance-free switching
- Very easy handling
- Fits perfectly in the SIRIUS modular system

		SIRIUS 3RW30 Standard applications	SIRIUS 3RW40 Standard applications	SIRIUS 3RW44 High-Feature applications
Rated current up to 50 °C	A	3 ... 98	11 ... 385	26 ... 1076
Rated operational voltage	V	200 ... 480	200 ... 600	200 ... 690
Motor rating at 460 V				
• Inline circuit	Hp	1.5 ... 75	7.5 ... 300	15 ... 900
• Inside-delta circuit	Hp	--	--	22 ... 1600
Ambient temperature	°C	-25 ... +60	-25 ... +60	0 ... +60
Soft starting/ramp-down		✔[1)]	✔	✔
Voltage ramp		✔	✔	✔
Starting/stopping voltage	%	40 ... 100	40 ... 100	20 ... 100
Starting and ramp-down time[7)]	s	0 ... 20	0 ... 20	1 ... 360
Torque control		--	--	✔
Starting/stopping torque	%	--	--	20 ... 100
Torque limit	%	--	--	20 ... 200
Ramp time	s	--	--	1 ... 360
Integral bypass contact system		✔	✔	✔
Intrinsic device protection		--	✔	✔
Motor overload protection		--	✔	✔
Thermistor motor protection		--	✔[2)]	✔
Integrated remote RESET		--	✔[3)]	✔
Adjustable current limiting		--	✔	✔
Inside-delta circuit		--	--	✔
Breakaway pulse		--	--	✔
Creep speed in both directions of rotation		--	--	✔
Pump ramp-down		--	--	✔[4)]
DC braking		--	--	✔[4) 5)]
Combined braking		--	--	✔[4) 5)]
Motor heating		--	--	✔
Communication		--	--	With PROFIBUS DP (optional)
External display and operator module		--	--	(optional)
Operating measured value display		--	--	✔
Error logbook		--	--	✔
Event list		--	--	✔
Slave pointer function		--	--	✔
Trace function		--	--	✔[6)]
Programmable control inputs and outputs		--	--	✔
Number of parameter sets		1	1	3
Parameterization software (Soft Starter ES)		--	--	✔
Power semiconductors (thyristors)		2 controlled phases	2 controlled phases	3 controlled phases
Screw terminals		✔	✔	✔
Spring-type terminals		✔	✔	✔
UL/CSA		✔	✔	✔
CE marking		✔	✔	✔
Soft starting under heavy starting conditions		--	--	✔[4)]
Configuring support		Win-Soft Starter, Electronic Application Selector, Technical Assistance Tel.: 1-800-333-7421		

✔ Function is available; -- Function is not available.

1) Only soft starting available for 3RW30.
2) Optional up to size S3 (device variant).
3) Available for 3RW40 2. to 3RW40 4.; optional for 3RW40 5. and 3RW40 7..
4) Calculate soft starter and motor with size allowance where required.
5) Not possible in inside-delta circuit.
6) Trace function with Soft Starter ES software.
7) Actual motor start times are load dependent.

You can find further information on the Internet at:
www.usa.siemens.com/softstarters

Overview

The SIRIUS 3RW30 soft starters reduce the motor voltage through variable phase control and increase it in ramp-like mode from a selectable starting voltage up to mains voltage. During starting, these devices limit the torque as well as the current and prevent the shocks which arise during direct starts or wye-delta starts. In this way, mechanical loads and mains voltage dips can be reliably reduced.

Soft starting reduces the stress on the connected equipment and results in lower wear and therefore longer periods of trouble-free production. The selectable start value means that the soft starters can be adjusted individually to the requirements of the application in question and unlike wye-delta starters are not restricted to two-stage starting with fixed voltage ratios.[1)]

The SIRIUS 3RW30 soft starters are characterized above all by their small space requirements. Integrated bypass contacts mean that minimal power loss is used at the power semiconductors (thyristors) after the motor has started up. This cuts down on heat losses, enabling a more compact design and making external bypass circuits superfluous.

Various versions of the SIRIUS 3RW30 soft starters are available:

- Standard version for fixed-speed three-phase motors, sizes S00, S0, S2 and S3, with integrated bypass contact system
- Version for fixed-speed three-phase motors in a 22.5 mm enclosure without bypass

Soft starters rated up to 75 Hp (at 460 V) for standard applications in three-phase networks are available. Extremely small sizes, low power losses and simple start-up are just three of the many advantages of this soft starter.

[1)] Actual motor start times are load dependent.

Application

The 3RW30 soft starters are suitable for soft starting of three-phase asynchronous motors.

Due to two-phase control, the current is kept at minimum values in all three phases throughout the entire starting time. Due to continuous voltage influencing, current and torque peaks, which are unavoidable in the case of wye-delta starters, for instance, do not occur.

Application areas

- Pumps
- Heat pumps
- Hydraulic pumps
- Presses
- Conveyors
- Roller conveyor
- Screw conveyors

Selection and ordering data

3RW30 18-1BB14

3RW30 28-1BB14

3RW30 38-1BB14

3RW30 47-1BB14

3RW30 03-2CB54

Ambient temperature 40 °C				Ambient temperature 50 °C					Size	Order No.	List Price $ per PU	PS*	Weight per PU approx.
Rated operational current I_e [1]	Rated power of induction motors for rated operational voltage U_e			Rated operational current I_e [1]	Rated power of induction motors for rated operational voltage U_e								
	230 V	400 V	500 V		200 V	230 V	460 V	575 V					
A	kW	kW	kW	A	hp	hp	hp	hp					
Rated operational voltage U_e 200 ... 480 V													
• With screw terminals													
3.6	0.75	**1.5**	--	3	0.5	0.5	**1.5**	--	**S00**	**3RW30 13-1BB□4**		1 unit	0.580
6.5	1.5	**3**	--	4.8	1	1	**3**	--	**S00**	**3RW30 14-1BB□4**		1 unit	0.580
9	2.2	**4**	--	7.8	2	2	**5**	--	**S00**	**3RW30 16-1BB□4**		1 unit	0.580
12.5	3	**5.5**	--	11	3	3	**7.5**	--	**S00**	**3RW30 17-1BB□4**		1 unit	0.580
17.6	4	**7.5**	--	17	3	3	**10**	--	**S00**	**3RW30 18-1BB□4**		1 unit	0.580
• With spring-type terminals													
3.6	0.75	**1.5**	--	3	0.5	0.5	**1.5**	--	**S00**	**3RW30 13-2BB□4**		1 unit	0.580
6.5	1.5	**3**	--	4.8	1	1	**3**	--	**S00**	**3RW30 14-2BB□4**		1 unit	0.580
9	2.2	**4**	--	7.8	2	2	**5**	--	**S00**	**3RW30 16-2BB□4**		1 unit	0.580
12.5	3	**5.5**	--	11	3	3	**7.5**	--	**S00**	**3RW30 17-2BB□4**		1 unit	0.580
17.6	4	**7.5**	--	17	3	3	**10**	--	**S00**	**3RW30 18-2BB□4**		1 unit	0.580
• With screw terminals													
25	5.5	**11**	--	23	5	5	**15**	--	**S0**	**3RW30 26-1BB□4**		1 unit	0.690
32	7.5	**15**	--	29	7.5	7.5	**20**	--	**S0**	**3RW30 27-1BB□4**		1 unit	0.690
38	11	**18.5**	--	34	10	10	**25**	--	**S0**	**3RW30 28-1BB□4**		1 unit	0.690
• With spring-type terminals													
25	5.5	**11**	--	23	5	5	**15**	--	**S0**	**3RW30 26-2BB□4**		1 unit	0.690
32	7.5	**15**	--	29	7.5	7.5	**20**	--	**S0**	**3RW30 27-2BB□4**		1 unit	0.690
38	11	**18.5**	--	34	10	10	**25**	--	**S0**	**3RW30 28-2BB□4**		1 unit	0.690
• With screw-type or spring-type terminals													
45	11	**22**	--	42	10	15	**30**	--	**S2**	**3RW30 36-□BB□4**		1 unit	1.200
63	18.5	**30**	--	58	15	20	**40**	--	**S2**	**3RW30 37-□BB□4**		1 unit	1.200
72	22	**37**	--	62	20	20	**40**	--	**S2**	**3RW30 38-□BB□4**		1 unit	1.200
• With screw-type or spring-type terminals													
80	22	**45**	--	73	20	25	**50**	--	**S3**	**3RW30 46-□BB□4**		1 unit	1.710
106	30	**55**	--	98	30	30	**75**	--	**S3**	**3RW30 47-□BB□4**		1 unit	1.710
Order No. supplement for connection types													
• With screw terminals										**1**			
• With spring-type terminals [2]										**2**			
Order No. supplement for rated control supply voltage U_s													
• 24 V AC/DC											**0**		
• 110 ... 230 V											**1**		
Soft starters for easy starting conditions and high switching frequency, rated operational voltage U_e 200 ... 400 V, rated control supply voltage U_s 24 ... 230 V AC/DC													
3	0.55	**1.1**	--	2.6	0.5	**0.5**	--	--	22.5 mm				
• With screw terminals										**3RW30 03-1CB54**		1 unit	0.207
• With spring-type terminals										**3RW30 03-2CB54**		1 unit	0.188

[1] Stand-alone installation.
[2] Power connection: screw terminals.

Note:
Selection of the soft starter depends on the rated motor current.

The SIRIUS 3RW30 solid-state soft starters are designed for easy starting conditions. $J_{Load} < 10 \times J_{Motor}$. In the event of deviating conditions or increased switching frequency, it may be necessary to choose a larger device.
Siemens recommends the use of the selection and simulation program Win-Soft Starter. For information about rated currents for ambient temperatures > 40 °C, see technical specifications (see technical information on page 17-238).

Accessories

	For soft starters Type	Size	Motor starter protectors Size	Order No.	List Price $ per PU	PS*	Weight per PU approx. kg
Auxiliary terminals							
	Auxiliary terminals, 3-pole						
	3RW30 4.	**S3**		**3RT19 46-4F**		1 unit	0.035
Covers for soft starters							
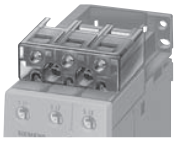	**Terminal covers for box terminals** Additional touch protection to be fitted at the box terminals (2 units required per device)						
	3RW30 3.	**S2**		**3RT19 36-4EA2**		1 unit	0.020
	3RW30 4.	**S3**		**3RT19 46-4EA2**		1 unit	0.025
	Terminal covers for cable lugs and busbar connections For complying with the phase clearances and as touch protection if box terminal is removed (2 units required per contactor)						
	3RW30 4.	**S3**		**3RT19 46-4EA1**		1 unit	0.040
Link modules to motor starter protectors							
	3RW30 13, 3RW30 14, 3RW30 16, 3RW30 17, 3RW30 18	**S00**	**S0**	**3RA19 21-1A**		10 units	0.028
	3RW30 26	**S0**	**S0**	**3RA19 21-1A**		10 units	0.028
	3RW30 36	**S2**	**S2**	**3RA19 31-1A**		5 units	0.033
	3RW30 46, 3RW30 47	**S3**	**S3**	**3RA19 41-1A**		5 units	0.072
Operating instructions[1]							
	For soft starters						
	3RW30 1.	**S00**		**3ZX10 12-0RW30-2DA1**			
	3RW30 2.	**S0**					
	3RW30 3.	**S2**					
	3RW30 4.	**S3**					

[1] The operating instructions are included in the scope of supply.

	Version	Functionality Functions	Order No.	List Price $ per PU		Weight per PU approx. kg
Covers and push-in lugs (only for 3RW30 03)						
3RP1 902	**Sealable covers**	For securing against unauthorized adjustment of setting knobs	**3RP1 902**		5 units	0.004
3RP1 903	**Push-in lugs** For screw fixing		**3RP1 903**		10 units	0.002

More information

Application examples for normal starting (Class 10)

Normal starting Class 10 (up to 20 s with 300 % $I_{n\ motor}$),
The soft starter rating can be selected to be as high as the rating of the motor used.

Application		Conveyor belt	Roller conveyor	Compressor	Small fan	Pump	Hydraulic pump
Starting parameters							
• Voltage ramp and current limiting							
- Starting voltage	%	70	60	50	40	40	40
- Starting time	s	10	10	20	20	10	10

Note:
These tables present sample set values and device sizes. They are intended only for the purposes of information and are not binding. The set values depend on the application in question and must be optimized during start-up. Actual start times are load dependent.
The soft starter dimensions should be checked where necessary with the Win-Soft Starter software or with the help of Technical Assistance.

Configuration

The 3RW solid-state motor controllers are designed for easy starting conditions. In the event of deviating conditions or increased switching frequency, it may be necessary to choose a larger device. For accurate dimensioning, use the Win-Soft Starter selection and simulation program.

If necessary, an overload relay for heavy starting must be selected where long starting times are involved. PTC sensors are recommended.

In the motor feeder between the SIRIUS 3RW soft starter and the motor, no capacitive elements are permitted (e. g. no reactive-power compensation equipment). In addition, neither static systems for reactive-power compensation nor dynamic PFC (Power Factor Correction) must be operated in parallel during starting and ramp-down of the soft starter. This is important to prevent faults arising on the compensation equipment and/or the soft starter.

All elements of the main circuit (such as fuses, controls and overload relays) should be dimensioned for direct starting, following the local short-circuit conditions. Fuses, controls and overload relays must be ordered separately. Please observe the maximum switching frequencies specified in the technical specifications.

Note:
When induction motors are switched on, voltage drops normally appear on starters of all types (direct starters, wye-delta starters, soft starters). The infeed transformer must always be dimensioned such that the voltage dip when starting the motor remains within the permissible tolerance. If the infeed transformer is dimensioned with only a small margin, it is best for the control voltage to be supplied from a separate circuit (independently of the main voltage) in order to avoid the potential switching off of the soft starter.

Power electronics schematic circuit diagram

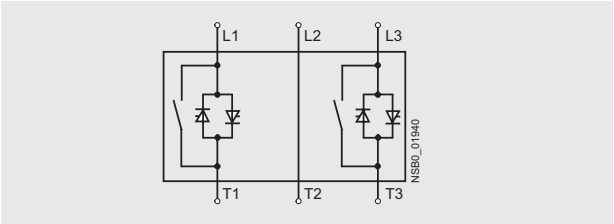

A bypass contact system is already integrated in the 3RW30 soft starter and therefore does not have to be ordered separately.

Status graphs

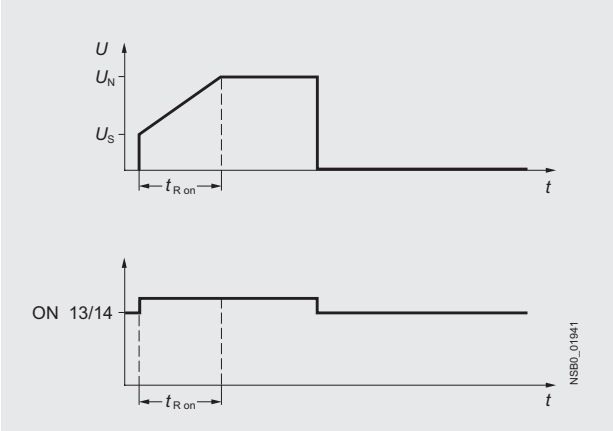

Win-Soft Starter selection and simulation program

With this software, you can simulate and select all Siemens soft starters, taking into account various parameters such as mains properties, motor and load data, and special application requirements.

The software is a valuable tool, which makes complicated, lengthy manual calculations for determining the required soft starters superfluous.

The Win-Soft Starter selection and simulation program can be downloaded from:
http://www.siemens.de/sanftstarter > Software

More information can be found on the Internet at:
http://www.sea.siemens.com/softstarters

Overview

SIRIUS 3RW40 soft starters have all the same advantages as the 3RW30 soft starters.

The SIRIUS 3RW40 soft starters are characterized above all by their small space requirements. Integrated bypass contacts mean that minimal power is used at the power semiconductors (thyristors) after the motor has started up. This cuts down on heat losses, enabling a more compact design and making external bypass circuits superfluous.

At the same time this soft starter comes with additional integrated functions such as adjustable current limiting, motor overload and intrinsic device protection, and optional thermistor motor protection on some models.

Internal intrinsic device protection prevents the thermal overloading of the thyristors and the power section defects this can cause. As an option the thyristors can also be protected by semiconductor fuses from short-circuiting.

Thanks to integrated status monitoring and fault monitoring, this compact soft starter offers many different diagnostics options. Up to four LEDs and relay outputs permit differentiated monitoring and diagnostics of the operating mechanism by indicating the operating state as well as for example mains or phase failure, missing load, non-permissible tripping time/class setting, thermal overloading or device faults.

Soft starters rated up to 300 Hp (at 460 V) for standard applications in three-phase systems are available. Extremely small sizes, low power losses and simple start-up are just three of the many advantages of the SIRIUS 3RW40 soft starters.

"Increased safety" type of protection EEx e according to ATEX directive 94/9/EC

The 3RW40 soft starter sizes S0 to S12 are suitable for the starting of explosion-proof motors with "increased safety" type of protection EEx e.
See "Appendix" –> "Standards and approvals" –> "Type overview of approved devices for potentially explosive areas (ATEX explosion protection)".

Application

The SIRIUS 3RW40 solid-state soft starters are suitable for soft starting and stopping of three-phase asynchronous motors.

Due to two-phase control, the current is kept at minimum values in all three phases throughout the entire starting time and disturbing direct current components are eliminated in addition. This not only enables the two-phase starting of motors up to 300 Hp (at 460 V) but also avoids the current and torque peaks which occur e. g. with wye-delta starters.

Application areas

- Pumps
- Heat pumps
- Hydraulic pumps
- Presses
- Conveyors
- Roller conveyor
- Screw conveyors
- Escalators
- Small fans
- Centrifugal blowers
- Bow thrusters
- Stirrers
- Extruders
- Lathes
- Milling machines

Selection and ordering data

3RW40 28-1BB14

3RW40 38-1BB14

3RW40 47-1BB14

Ambient temperature 50 °C					Size	Order No.	List Price $ per PU	PS*	Weight per PU approx.
Rated operational current I_e 1)	Rated power of induction motors for rated operational voltage U_e								
	200 V	230 V	460 V	575 V					
A	hp	hp	hp	hp					kg
Rated operational voltage U_e 200 ... 480 V									
• With screw terminals									
11	3	3	**7.5**	--	**S0**	**3RW40 24-1BB□4**		1 unit	0.770
23	5	5	**15**	--	**S0**	**3RW40 26-1BB□4**		1 unit	0.770
29	7.5	7.5	**20**	--	**S0**	**3RW40 27-1BB□4**		1 unit	0.770
34	10	10	**25**	--	**S0**	**3RW40 28-1BB□4**		1 unit	0.770
• With spring-type terminals									
11	3	3	**7.5**	--	**S0**	**3RW40 24-2BB□4**		1 unit	0.770
23	5	5	**15**	--	**S0**	**3RW40 26-2BB□4**		1 unit	0.770
29	7.5	7.5	**20**	--	**S0**	**3RW40 27-2BB□4**		1 unit	0.770
34	10	10	**25**	--	**S0**	**3RW40 28-2BB□4**		1 unit	0.770
• With screw or spring-type terminals									
42	10	15	**30**	--	**S2**	**3RW40 36-□BB□4**		1 unit	1.350
58	15	20	**40**	--	**S2**	**3RW40 37-□BB□4**		1 unit	1.350
62	20	20	**40**	--	**S2**	**3RW40 38-□BB□4**		1 unit	1.350
• With screw or spring-type terminals									
73	20	25	**50**	--	**S3**	**3RW40 46-□BB□4**		1 unit	1.900
98	30	30	**75**	--	**S3**	**3RW40 47-□BB□4**		1 unit	1.900
Rated operational voltage U_e 400 ... 600 V									
• With screw terminals									
11	--	--	7.5	**10**	**S0**	**3RW40 24-1BB□5**		1 unit	0.770
23	--	--	15	**20**	**S0**	**3RW40 26-1BB□5**		1 unit	0.770
29	--	--	20	**25**	**S0**	**3RW40 27-1BB□5**		1 unit	0.770
34	--	--	25	**30**	**S0**	**3RW40 28-1BB□5**		1 unit	0.770
• With spring-type terminals									
11	--	--	7.5	**10**	**S0**	**3RW40 24-2BB□5**		1 unit	0.770
23	--	--	15	**20**	**S0**	**3RW40 26-2BB□5**		1 unit	0.770
29	--	--	20	**25**	**S0**	**3RW40 27-2BB□5**		1 unit	0.770
34	--	--	25	**30**	**S0**	**3RW40 28-2BB□5**		1 unit	0.770
• With screw or spring-type terminals									
42	--	--	30	**40**	**S2**	**3RW40 36-□BB□5**		1 unit	1.350
58	--	--	40	**50**	**S2**	**3RW40 37-□BB□5**		1 unit	1.350
62	--	--	40	**60**	**S2**	**3RW40 38-□BB□5**		1 unit	1.350
• With screw or spring-type terminals									
73	--	--	50	**60**	**S3**	**3RW40 46-□BB□5**		1 unit	1.900
98	--	--	75	**75**	**S3**	**3RW40 47-□BB□5**		1 unit	1.900

Order No. supplement for connection types

- With screw terminals **1**
- With spring-type terminals 2) **2**

Order No. supplement for rated control supply voltage U_s

- 24 V AC/DC **0**
- 110 ... 230 V AC/DC **1**

1) Stand-alone installation without auxiliary fan.

2) Power connection: screw terminals.

Note:
Selection of the soft starter depends on the rated motor current.

The SIRIUS 3RW40 solid-state soft starters are designed for easy starting conditions. $J_{Load} < 10 \times J_{Motor}$. In the event of deviating conditions or increased switching frequency, it may be necessary to choose a larger device. Siemens recommends the use of the selection and simulation program Win-Soft Starter. For information about rated currents for ambient temperatures other than 50°C, see technical information on page 17-250

3RW40 28-1TB04

3RW40 38-1TB04

3RW40 47-1TB04

Ambient temperature 50 °C					Size	Order No.	List Price $ per PU	PS*	Weight per PU approx.
Rated operational current I_e [1]	Rated power of induction motors for rated operational voltage U_e								
	200 V	230 V	460 V	575 V					
A	hp	hp	hp	hp					kg
Rated operational voltage U_e 200 ... 480 V, with thermistor motor protection, rated control supply voltage U_s 24 V AC/DC									
• With screw terminals									
11	3	3	**7.5**	--	**S0**	**3RW40 24-1TB04**		1 unit	0.770
23	5	5	**15**	--	**S0**	**3RW40 26-1TB04**		1 unit	0.770
29	7.5	7.5	**20**	--	**S0**	**3RW40 27-1TB04**		1 unit	0.770
34	10	10	**25**	--	**S0**	**3RW40 28-1TB04**		1 unit	0.770
• With spring-type terminals									
11	3	3	**7.5**	--	**S0**	**3RW40 24-2TB04**		1 unit	0.770
23	5	5	**15**	--	**S0**	**3RW40 26-2TB04**		1 unit	0.770
29	7.5	7.5	**20**	--	**S0**	**3RW40 27-2TB04**		1 unit	0.770
34	10	10	**25**	--	**S0**	**3RW40 28-2TB04**		1 unit	0.770
• With screw or spring-type terminals									
42	10	15	**30**	--	**S2**	**3RW40 36-□TB04**		1 unit	1.350
58	15	20	**40**	--	**S2**	**3RW40 37-□TB04**		1 unit	1.350
62	20	20	**40**	--	**S2**	**3RW40 38-□TB04**		1 unit	1.350
• With screw or spring-type terminals									
73	20	25	**50**	--	**S3**	**3RW40 46-□TB04**		1 unit	1.900
98	30	30	**75**	--	**S3**	**3RW40 47-□TB04**		1 unit	1.900
Rated operational voltage U_e 400 ... 600 V, with thermistor motor protection, rated control supply voltage U_s 24 V AC/DC									
• With screw terminals									
11	--	--	7.5	**10**	**S0**	**3RW40 24-1TB05**		1 unit	0.770
23	--	--	15	**20**	**S0**	**3RW40 26-1TB05**		1 unit	0.770
29	--	--	20	**25**	**S0**	**3RW40 27-1TB05**		1 unit	0.770
34	--	--	25	**30**	**S0**	**3RW40 28-1TB05**		1 unit	0.770
• With spring-type terminals									
11	--	--	7.5	**10**	**S0**	**3RW40 24-2TB05**		1 unit	0.770
23	--	--	15	**20**	**S0**	**3RW40 26-2TB05**		1 unit	0.770
29	--	--	20	**25**	**S0**	**3RW40 27-2TB05**		1 unit	0.770
34	--	--	25	**30**	**S0**	**3RW40 28-2TB05**		1 unit	0.770
• With screw or spring-type terminals									
42	--	--	30	**40**	**S2**	**3RW40 36-□TB05**		1 unit	1.350
58	--	--	40	**50**	**S2**	**3RW40 37-□TB05**		1 unit	1.350
62	--	--	40	**60**	**S2**	**3RW40 38-□TB05**		1 unit	1.350
• With screw or spring-type terminals									
73	--	--	50	**60**	**S3**	**3RW40 46-□TB05**		1 unit	1.900
98	--	--	75	**75**	**S3**	**3RW40 47-□TB05**		1 unit	1.900

Order No. supplement for connection types

- With screw terminals **1**
- With spring-type terminals[2] **2**

[1] Stand-alone installation without auxiliary fan.

[2] Power connection: screw terminals.

Note:
Selection of the soft starter depends on the rated motor current.

The SIRIUS 3RW40 solid-state soft starters are designed for easy starting conditions. $J_{Load} < 10 \times J_{Motor}$. In the event of deviating conditions or increased switching frequency, it may be necessary to choose a larger device. Siemens recommends the use of the selection and simulation program Win-Soft Starter. For information about rated currents for ambient temperatures > 40° C, see technical information on page 17-250

3RW40 56-6BB44

3RW40 76-6BB44

Ambient temperature 50 °C					Size	Order No.	List Price $ per PU	PS*	Weight per PU approx.
Rated operational current I_e 1)	Rated power of induction motors for rated operational voltage U_e								
	200 V	230 V	460 V	575 V					
A	hp	hp	hp	hp					kg
Rated operational voltage U_e 200 ... 460 V									
• With screw or spring-type terminals									
117	30	40	**75**	--	**S6**	**3RW40 55-□BB□4**		1 unit	4.900
145	40	50	**100**	--		**3RW40 56-□BB□4**		1 unit	6.900
• With screw or spring-type terminals									
205	60	75	**150**	--	**S12**	**3RW40 73-□BB□4**		1 unit	8.900
248	75	100	**200**	--		**3RW40 74-□BB□4**		1 unit	8.900
315	100	125	**250**	--		**3RW40 75-□BB□4**		1 unit	8.900
385	125	150	**300**	--		**3RW40 76-□BB□4**		1 unit	8.900
Rated operational voltage U_e 400 ... 600 V									
• With screw or spring-type terminals									
117	--	--	75	**100**	**S6**	**3RW40 55-□BB□5**		1 unit	4.900
145	--	--	100	**150**		**3RW40 56-□BB□5**		1 unit	6.900
• With screw or spring-type terminals									
205	--	--	150	**200**	**S12**	**3RW40 73-□BB□5**		1 unit	8.900
248	--	--	200	**250**		**3RW40 74-□BB□5**		1 unit	8.900
315	--	--	250	**300**		**3RW40 75-□BB□5**		1 unit	8.900
385	--	--	300	**400**		**3RW40 76-□BB□5**		1 unit	8.900

Order No. supplement for connection types[2)]

- With screw terminals **6**
- With spring-type terminals **2**

Order No. supplement for the rated control supply voltage U_s[3)]

- 115 V AC **3**
- 230 V AC **4**

1) Stand-alone installation.

2) Power connection: busbar connection.

3) Control by way of the internal 24 V DC supply and direct control by means of PLC possible.

Note:
Selection of the soft starter depends on the rated motor current.

The SIRIUS 3RW40 solid-state soft starters are designed for easy starting conditions. $J_{Load} < 10 \times J_{Motor}$. In the event of deviating conditions or increased switching frequency, it may be necessary to choose a larger device. Siemens recommends the use of the selection and simulation program Win-Soft Starter. For information about rated currents for ambient temperatures > 40° C, see technical information on page 17-250

Accessories

For soft starters Type	Size	Version	Order No.	List Price $ per PU	PS*	Weight per PU approx. kg
Box terminal blocks for soft starters						
For round and flat wires						
3RW40 5.	**S6**	• Up to 70 mm²	**3RT19 55-4G**		1 unit	0.230
		• Up to 120 mm²	**3RT19 56-4G**		1 unit	0.260
3RW40 7.	**S12**	• Up to 240 mm²	**3RT19 66-4G**		1 unit	0.676
Auxiliary terminals						
Auxiliary terminals, 3-pole						
3RW40 4.	**S3**		**3RT19 46-4F**		1 unit	0.035
Covers for soft starters						
Terminal covers for box terminals						
Additional touch protection to be fitted at the box terminals (2 units required per device)						
3RW40 3.	**S2**		**3RT19 36-4EA2**		1 unit	0.020
3RW40 4.	**S3**		**3RT19 46-4EA2**		1 unit	0.025
3RW40 5.	**S6**		**3RT19 56-4EA2**		1 unit	0.030
3RW40 7.	**S12**		**3RT19 66-4EA2**		1 unit	0.040
Terminal covers for cable lugs and busbar connections						
3RW40 4.	**S3**	For complying with the phase clearances and as touch protection if box terminal is removed (2 units required per contactor)	**3RT19 46-4EA1**		1 unit	0.040
3RW40 5.	**S6**		**3RT19 56-4EA1**		1 unit	0.070
3RW40 7.	**S12**		**3RT19 66-4EA1**		1 unit	0.130
Sealing covers						
3RW40 2. to 3RW40 4.	**S0, S2, S3**		**3RW49 00-0PB10**		1 unit	0.005
3RW40 5. and 3RW40 7.	**S6, S12**		**3RW49 00-0PB00**		1 unit	0.010
Modules for RESET[1)]						
Modules for remote RESET, electrical						
Operating range 0.85 ... 1.1 x U_s, power consumption 80 VA AC, 70 W DC, ON period 0.2 s ... 4 s, switching frequency 60/h						
3RW40 5. and 3RW40 7.	**S6, S12**	• 24 ... 30 V AC/DC	**3RU19 00-2AB71**		1 unit	0.066
		• 110 ... 127 V AC/DC	**3RU19 00-2AF71**		1 unit	0.067
		• 220 ... 250 V AC/DC	**3RU19 00-2AM71**		1 unit	0.066
Mechanical RESET comprising						
3RW40 5. and 3RW40 7.	**S6, S12**	• Resetting plungers, holders and formers	**3RU19 00-1A**		1 unit	0.038
		• Suitable pushbutton IP65, Ø 22 mm, 12 mm stroke	**3SB30 00-0EA11**		1 unit	0.020
		• Extension plunger	**3SX13 35**		1 unit	0.004
Cable releases with holder for RESET						
For Ø 6.5 mm holes in the control panel; max. control panel thickness 8 mm						
3RW40 5. and 3RW40 7.	**S6, S12**	• Length 400 mm	**3RU19 00-1B**		1 unit	0.063
		• Length 600 mm	**3RU19 00-1C**		1 unit	0.073

1) Remote RESET already integrated in the 3RW40 2. to 3RW40 4. soft starters.

	For soft starters Type	Size	Motor starter protectors Size	Order No.	List Price $ per PU	PS*	Weight per PU approx. kg
Link modules to motor starter protectors							
	3RW40 24, 3RW40 26	**S0**	**S0**	**3RA19 21-1A**		10 units	0.028
	3RW40 36	**S2**	**S2**	**3RA19 31-1A**		5 units	0.033
	3RW40 46, 3RW40 47	**S3**	**S3**	**3RA19 41-1A**		5 units	0.072
Fans (to increase switching frequency and for device mounting in positions different from the normal position)							
	3RW40 2.	**S0**		**3RW49 28-8VB00**		1 unit	0.010
	3RW40 3., 3RW40 4.	**S2, S3**		**3RW49 47-8VB00**		1 unit	0.020
Operating instructions[1]							
	For soft starters						
	3RW40 2. 3RW40 3. 3RW40 4.	**S0 S2 S3**		**3ZX10 12-0RW40-1AA1**			
	3RW40 5. 3RW40 7.	**S6 S12**		**3ZX10 12-0RW40-2DA1**			

[1] The operating instructions are included in the scope of supply.

They are also available on the Internet at:
www.usa.siemens.com/softstarters

Spare parts

	For soft starters Type	Size	Version Rated control supply voltage U_s	Order No.	List Price $ per PU	PS*	Weight per PU approx. kg
Fans							
	Fans						
	3RW40 5.-.BB3.	**S6**	115 V AC	**3RW49 36-8VX30**		1 unit	0.300
	3RW40 5.-.BB4.	**S6**	230 V AC	**3RW49 36-8VX40**		1 unit	0.300
	3RW40 7.-.BB3.	**S12**	115 V AC	**3RW49 47-8VX30**		1 unit	0.500
	3RW40 7.-.BB4.	**S12**	230 V AC	**3RW49 47-8VX40**		1 unit	0.500

More information

Application examples for normal starting (Class 10)

Normal starting Class 10 (up to 20 s with 350 % $I_{n\ motor}$),
The soft starter rating can be selected to be as high as the rating of the motor used.

Application		Conveyor belt	Roller conveyor	Small fan	Pump	Hydraulic pump
Starting parameters						
• Voltage ramp and current limiting						
- Starting voltage	%	70	60	40	40	40
- Starting time	s	10	10	10	10	10
- Current limit value		5 x I_M	5 x I_M	4 x I_M	4 x I_M	4 x I_M
Ramp-down time	s	5	5	0	10	0

Application examples for heavy starting (Class 20)

Heavy starting Class 20 (up to 40 s with 350 % $I_{n\ motor}$),
The soft starter has to be selected at least one rating class higher than the motor used.

Application		Stirrer	Centrifuge
Starting parameters			
• Voltage ramp and current limiting			
- Starting voltage	%	40	40
- Starting time	s	20	20
- Current limit value		4 x I_M	4 x I_M
Ramp-down time		0	0

Note:
These tables present sample set values and device sizes. They are intended only for the purposes of information and are not binding. The set values depend on the application in question and must be optimized during start-up. Actual start times are load dependent.

The soft starter dimensions should be checked where necessary with the Win-Soft Starter software or with the help of Technical Assistance.

Configuration

The 3RW solid-state soft starters are designed for easy starting conditions. In the event of severe conditions or increased switching frequency, it may be necessary to choose a larger device. For accurate dimensioning, use the Win-Soft Starter selection and simulation program.

Where long starting times are involved, the integrated solid-state overload relay for heavy starting should not be disconnected. PTC sensors are recommended. This also applies for the smooth ramp-down because during the ramp-down time an additional current loading applies in contrast to free ramp-down.

In the case of high switching frequencies in S4 mode, Siemens recommends the use of PTC sensors. For corresponding device versions with integrated thermistor motor protection or separate thermistor evaluation devices see Industrial Controls catalog Chapter 11 "Function Relays, Interfaces and Converters".

In the motor feeder between the SIRIUS 3RW soft starter and the motor, no capacitive elements are permitted (e. g. no reactive-power compensation equipment, PFC capacitors). In addition, neither static systems for reactive-power compensation nor dynamic PFC (Power Factor Correction) must be operated in parallel during starting and ramp-down of the soft starter. This is important to prevent faults arising on the compensation equipment and/or the soft starter.

All elements of the main circuit (such as fuses and controls) should be dimensioned for direct starting, following the local short-circuit conditions. Fuses, controls and overload relays must be ordered separately. Please observe the maximum switching frequencies specified in the technical specifications.

Note:
When induction motors are switched on, voltage drops normally appear on starters of all types (direct starters, wye-delta starters, soft starters). The infeed transformer must always be dimensioned such that the voltage dip when starting the motor remains within the permissible tolerance. If the infeed transformer is dimensioned with only a small margin, it is best for the control voltage to be supplied from a separate circuit (independently of the main voltage) in order to avoid the potential switching off of the soft starter.

Power electronics schematic circuit diagram

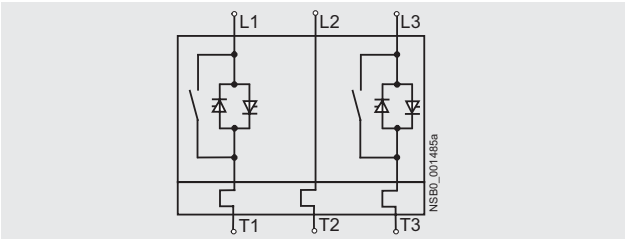

A bypass contact system and solid-state overload relay are already integrated in the 3RW40 soft starter and therefore do not have to be ordered separately.

Status graphs[1)]

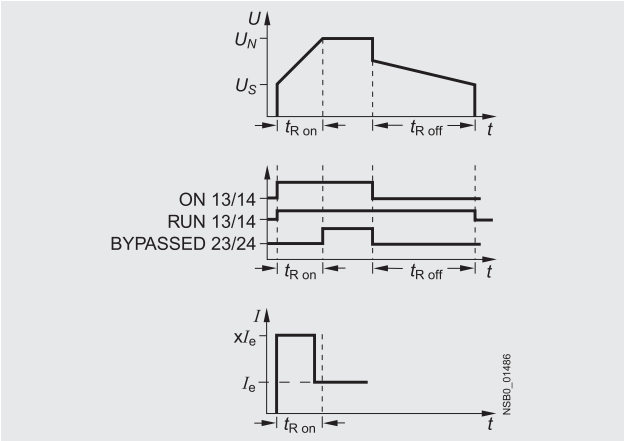

Win-Soft Starter selection and simulation program

With this software, you can simulate and select all Siemens soft starters, taking into account various parameters such as mains properties, motor and load data, and special application requirements.

The software is a valuable tool, which makes complicated, lengthy manual calculations for determining the required soft starters superfluous.

The Win-Soft Starter selection and simulation program can be downloaded from:
www.usa.siemens.com/softstarters > Software

More information can be found on the Internet at:
www.usa.siemens.com/softstarters

1) U_n = Full Voltage
2) U_s = Starting (Initial) Voltage
3) t_R = Time Running
4) I_e = Rated operational current

Overview

In addition to soft starting and soft ramp-down, the solid-state SIRIUS 3RW44 soft starters provide numerous functions for higher-level requirements. They cover a performance range up to 900 Hp (at 460 V) in the inline circuit and up to 1600Hp (at 460 V) in the inside-delta circuit.

The SIRIUS 3RW44 soft starters are characterized by a compact design for space-saving and clearly arranged control cabinet layouts. For optimized motor starting and stopping the innovative SIRIUS 3RW44 soft starters are an attractive alternative with considerable savings potential compared to applications with a frequency converter. The new torque control and adjustable current limiting enable the High-Feature soft starters to be used in nearly every conceivable task. They guarantee the reliable avoidance of sudden torque applications and current peaks during motor starting and stopping. This creates savings potential when calculating the size of the switchgear and when servicing the machinery installed. Whether it's for inline circuits or inside-delta circuits – the SIRIUS 3RW44 soft starter offers savings especially in terms of size and equipment costs.

The bypass contacts already integrated in the soft starter bypass the thyristors after a motor ramp-up is detected. This results in a further reduction in the heat loss occuring during operation of the soft starter.

Combinations of various starting, operating and ramp-down possibilities ensure an optimum adaptation to the application-specific requirements. Operation and commissioning can be performed with the menu-controlled keypad and a menu-prompted, multi-line graphical display with background lighting. The optimized motor ramp-up and ramp-down can be effected quickly, easily and reliably by means of just a few settings with a previously selected language. Four-key operation and plain-text displays for each menu point guarantee full clarity at every moment of the parameterization and operation.

Applicable standards

- IEC 60947-4-2
- UL/CSA

Soft Starter ES parameterization software

Soft Starter ES software is used for the parameterization, monitoring and service diagnostics of SIRIUS 3RW44 High Feature soft starters.

Application

The SIRIUS 3RW44 solid-state soft starters are suitable for the torque-controlled soft starting and smooth ramp-down as well as braking of three-phase asynchronous motors.

Application areas, e. g.

- Pumps
- Fans
- Compressors
- Water transport
- Conveying systems and lifts
- Hydraulics
- Machine tools
- Mills
- Saws
- Crushers
- Mixers
- Centrifuges
- Industrial cooling and refrigerating systems

Selection and ordering data

3RW44 27-1BC44

3RW44 36-6BC44

3RW44 47-6BC44

3RW44 58-6BC44

3RW44 66-6BC44

Ambient temperature 50 °C					Order No.	List Price $ per PU	PS*	Weight per PU approx.
Rated operational current I_e	Rated power of induction motors for rated operational voltage U_e							
	200 V	230 V	460 V	575 V				
A	hp	hp	hp	hp				kg
Inline circuits[2], rated operational voltage 200 ... 460 V								
26	7.5	7.5	**15**	--	**3RW44 22-□BC□4**		1 unit	6.500
32	10	10	**20**	--	**3RW44 23-□BC□4**		1 unit	6.500
42	10	15	**25**	--	**3RW44 24-□BC□4**		1 unit	6.500
51	15	15	**30**	--	**3RW44 25-□BC□4**		1 unit	6.500
68	20	20	**50**	--	**3RW44 26-□BC□4**		1 unit	6.500
82	25	25	**60**	--	**3RW44 27-□BC□4**		1 unit	6.500
Order No. supplement for connection types								
• With spring-type terminals					**3**			
• With screw terminals					**1**			
100	30	30	**75**	--	**3RW44 34-□BC□4**		1 unit	7.900
117	30	40	**75**	--	**3RW44 35-□BC□4**		1 unit	7.900
145	40	50	**100**	--	**3RW44 36-□BC□4**		1 unit	7.900
180	50	60	**125**	--	**3RW44 43-□BC□4**		1 unit	11.500
215	60	75	**150**	--	**3RW44 44-□BC□4**		1 unit	11.500
280	75	100	**200**	--	**3RW44 45-□BC□4**		1 unit	11.500
315	100	125	**250**	--	**3RW44 46-□BC□4**		1 unit	11.500
385	125	150	**300**	--	**3RW44 47-□BC□4**		1 unit	11.500
494	150	200	**400**	--	**3RW44 53-□BC□4**		1 unit	50.000
551	150	200	**450**	--	**3RW44 54-□BC□4**		1 unit	50.000
615	200	250	**500**	--	**3RW44 55-□BC□4**		1 unit	50.000
693	200	250	**550**	--	**3RW44 56-□BC□4**		1 unit	50.000
780	250	300	**600**	--	**3RW44 57-□BC□4**		1 unit	50.000
850	300	350	**700**	--	**3RW44 58-□BC□4**		1 unit	50.000
970	350	400	**800**	--	**3RW44 65-□BC□4**		1 unit	78.000
1076	350	400	**900**	--	**3RW44 66-□BC□4**		1 unit	78.000
Order No. supplement for connection types								
• With spring-type terminals					**2**			
• With screw terminals					**6**			
Order No. supplement for the rated control supply voltage U_s[1]								
• 115 V AC						**3**		
• 230 V AC						**4**		

[1] Control by way of the internal 24 V DC supply and direct control by means of PLC possible.

[2] For inside delta selection, see page 17-270.

Note:
Soft starter selection depends on the rated motor current.

The 3RW44 solid-state soft starters are designed for normal starting (Class 10). (Inertia load of the overall operating mechanism $J_{Load} < 10 \times J_{Motor}$; starting current 350 % x I_e for 20 s similar load). For any other conditions of use, the devices should be selected using the Win-Soft Starter selection and simulation program. See Technical specifications for information about rated currents for ambient temperatures > 40 °C and switching frequency.

Ambient temperature 50 °C								
Rated operational current I_e	Rated power of induction motors for rated operational voltage U_e				Order No.	List Price $ per PU	PS*	Weight per PU approx.
	200 V	230 V	460 V	575 V				
A	hp	hp	hp	hp				kg
Inline circuits[2], rated operational voltage 400 ... 600 V								
26	--	--	15	**20**	**3RW44 22-□BC□5**		1 unit	6.500
32	--	--	20	**25**	**3RW44 23-□BC□5**		1 unit	6.500
42	--	--	25	**30**	**3RW44 24-□BC□5**		1 unit	6.500
51	--	--	30	**40**	**3RW44 25-□BC□5**		1 unit	6.500
68	--	--	50	**50**	**3RW44 26-□BC□5**		1 unit	6.500
82	--	--	60	**75**	**3RW44 27-□BC□5**		1 unit	6.500
Order No. supplement for connection types								
• With spring-type terminals					**3**			
• With screw terminals					**1**			
100	--	--	75	**75**	**3RW44 34-□BC□5**		1 unit	7.900
117	--	--	75	**100**	**3RW44 35-□BC□5**		1 unit	7.900
145	--	--	100	**125**	**3RW44 36-□BC□5**		1 unit	7.900
180	--	--	125	**150**	**3RW44 43-□BC□5**		1 unit	11.500
215	--	--	150	**200**	**3RW44 44-□BC□5**		1 unit	11.500
280	--	--	200	**250**	**3RW44 45-□BC□5**		1 unit	11.500
315	--	--	250	**300**	**3RW44 46-□BC□5**		1 unit	11.500
385	--	--	300	**400**	**3RW44 47-□BC□5**		1 unit	11.500
494	--	--	400	**500**	**3RW44 53-□BC□5**		1 unit	50.000
551	--	--	450	**550**	**3RW44 54-□BC□5**		1 unit	50.000
615	--	--	500	**600**	**3RW44 55-□BC□5**		1 unit	50.000
693	--	--	550	**700**	**3RW44 56-□BC□5**		1 unit	50.000
780	--	--	600	**800**	**3RW44 57-□BC□5**		1 unit	50.000
850	--	--	700	**850**	**3RW44 58-□BC□5**		1 unit	50.000
970	--	--	800	**1000**	**3RW44 65-□BC□5**		1 unit	78.000
1076	--	--	900	**1100**	**3RW44 66-□BC□5**		1 unit	78.000
Order No. supplement for connection types								
• With spring-type terminals					**2**			
• With screw terminals					**6**			
Order No. supplement for the rated control supply voltage U_s[1]								
• 115 V AC						**3**		
• 230 V AC						**4**		

[1] Control by way of the internal 24 V DC supply and direct control by means of PLC possible.

[2] For inside delta selection, see page 17-270.

Note:
Soft starter selection depends on the rated motor current.

The 3RW44 solid-state soft starters are designed for normal starting (Class 10). (Inertia load of the overall operating mechanism $J_{Load} < 10 \times J_{Motor}$; starting current 350 % x I_e for 20 s similar load). For any other conditions of use, the devices should be selected using the Win-Soft Starter selection and simulation program. See Technical specifications for information about rated currents for ambient temperatures > 40 °C and switching frequency.

Ambient temperature 50 °C					Order No.	List Price $ per PU	PS*	Weight per PU approx.
Rated operational current I_e	Rated power of induction motors for rated operational voltage U_e							
	200 V	230 V	460 V	575 V				
A	hp	hp	hp	hp				kg
Inline circuits, rated operational voltage 400 ... 690 V								
26	--	--	15	**20**	**3RW44 22-□BC□6**		1 unit	6.500
32	--	--	20	**25**	**3RW44 23-□BC□6**		1 unit	6.500
42	--	--	25	**30**	**3RW44 24-□BC□6**		1 unit	6.500
51	--	--	30	**40**	**3RW44 25-□BC□6**		1 unit	6.500
68	--	--	50	**50**	**3RW44 26-□BC□6**		1 unit	6.500
82	--	--	60	**75**	**3RW44 27-□BC□6**		1 unit	6.500
Order No. supplement for connection types								
• With spring-type terminals					**3**			
• With screw terminals					**1**			
100	--	--	75	**75**	**3RW44 34-□BC□6**		1 unit	7.900
117	--	--	75	**100**	**3RW44 35-□BC□6**		1 unit	7.900
145	--	--	100	**125**	**3RW44 36-□BC□6**		1 unit	7.900
180	--	--	125	**150**	**3RW44 43-□BC□6**		1 unit	11.500
215	--	--	150	**200**	**3RW44 44-□BC□6**		1 unit	11.500
280	--	--	200	**250**	**3RW44 45-□BC□6**		1 unit	11.500
315	--	--	250	**300**	**3RW44 46-□BC□6**		1 unit	11.500
385	--	--	300	**400**	**3RW44 47-□BC□6**		1 unit	11.500
494	--	--	400	**500**	**3RW44 53-□BC□6**		1 unit	50.000
551	--	--	450	**550**	**3RW44 54-□BC□6**		1 unit	50.000
615	--	--	500	**600**	**3RW44 55-□BC□6**		1 unit	50.000
693	--	--	550	**700**	**3RW44 56-□BC□6**		1 unit	50.000
780	--	--	600	**800**	**3RW44 57-□BC□6**		1 unit	50.000
850	--	--	700	**850**	**3RW44 58-□BC□6**		1 unit	50.000
970	--	--	800	**1000**	**3RW44 65-□BC□6**		1 unit	78.000
1076	--	--	900	**1100**	**3RW44 66-□BC□6**		1 unit	78.000
Order No. supplement for connection types								
• With spring-type terminals					**2**			
• With screw terminals					**6**			
Order No. supplement for the rated control supply voltage U_s [1)]								
• 115 V AC						**3**		
• 230 V AC						**4**		

[1)] Control by way of the internal 24 V DC supply and direct control by means of PLC possible.

Note:
Soft starter selection depends on the rated motor current.

The 3RW44 solid-state soft starters are designed for normal starting (Class 10). (Inertia load of the overall operating mechanism $J_{Load} < 10 \times J_{Motor}$; starting current 350 % x I_e for 20 s similar load). For any other conditions of use, the devices should be selected using the Win-Soft Starter selection and simulation program. See Technical specifications for information about rated currents for ambient temperatures > 40 °C and switching frequency.

Overview

SIRIUS ES engineering software (E-SW)

The programs of the SIRIUS ES software family enable:

- Clearly arranged configuring of device functions and their parameters – online and offline
- Efficient diagnostics functions and display of the most important measured values
- Time savings through shorter startup times.

The SIRIUS ES programs such as Motor Starter ES, Soft Starter ES and SIMOCODE ES are available in three versions which differ in user-friendliness, scope of functions and price (for details see the descriptions of the individual products).

SIRIUS ES	Basic	Standard	Premium
Local interface on the device (system interface)	✔	✔	✔
Basic functions for parameterizing the devices			
• Parameter assignment	✔	✔	✔
• Operating	✔	✔	✔
• Diagnostics	✔	✔	✔
• Test	✔	✔	✔
Standard functionality			
• Parameterizing with the integrated graphics editor[1)]	--	✔	✔
• Creating typicals	--	✔	✔
• Exporting parameters	--	✔	✔
Complete functionality			
• Group functions	--	--	✔
• S7 Routing	--	--	✔
• Teleservice through MPI	--	--	✔
• STEP7 Object Manager	--	--	✔
PROFIBUS interface	--	--	✔

1) Depending on SIRIUS ES program.

Application

In addition to device-specific parameterization, the programs of the SIRIUS ES software family also provide the following functionality in a uniform look and feel. These functions are available in many SIRIUS ES programs.

- Standards-conform printouts
  The programs of the SIRIUS ES software family greatly simplify machine documentation. Parameterization printouts according to EN ISO 7200 are possible. The elements to be printed are easy to select and compile as required.
- Easy creation of parameter templates
  Parameter templates can be created for devices and applications with only minimum differences in their parameters. These templates contain all the parameters which are needed for the parameterization. In addition it is possible to specify which of these parameters are fixed and which can be customized, e. g. by the startup engineer.
- Group function
  For the user-friendly parameterization of numerous devices or applications of the same type, the programs of the SIRIUS ES software family offer a group function which enables the parameterization of several devices to be read out or written through PROFIBUS. In conjunction with templates it is even possible to selectively adapt the same parameters in any number of parameterizations.
- Teleservice through MPI
  The premium versions of the SIRIUS ES software families support the use of MPI Teleservice (comprising the Teleservice software and various Teleservice adapters) for remote diagnostics of the devices. This facilitates diagnostics and maintenance and it shortens response times for service purposes.

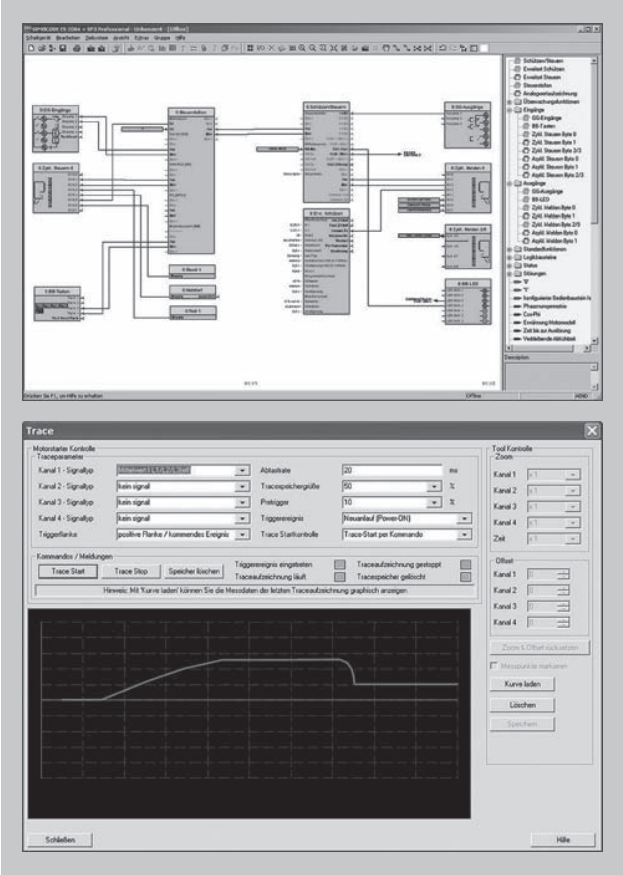

Efficient engineering and startup with graphic interfaces and diagnostics options

Types of delivery and license

The programs of the SIRIUS ES software family are available as follows:

- Floating license – the license for any one user at any one time
  - Authorizes any one user
  - Independent of the number of installations (unlike the single license which is allowed to be installed once only)
  - Only the actual use of the program has to be licensed
  - Trial license (free use of all program functions for 14 days for test and evaluation purposes, included on every product CD, available in the download file of the SIRIUS ES program in the Service&Support portal).

Following delivery versions are available in addition for the programs of the SIRIUS ES software family:

- Upgrade
  Upgrade from an old to a new version with expanded functions, e. g. upgrade from Motor Starter ES 2006 to Motor Starter ES 2007
- Powerpack
  Special pack for switching within the same software version to a more powerful version with more functionality, e. g. Powerpack Motor Starter ES 2007 for switching from Standard to Premium
- Software Update Service
  To keep you up to date at all times we offer a special service which supplies you automatically with all service packs and upgrades

Overview

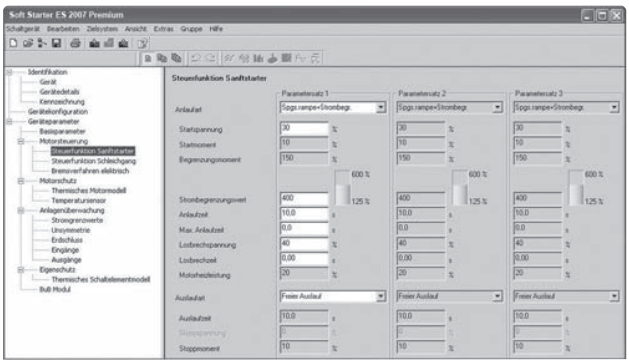

Easy and clearly arranged parameter setting of the 3RW44 soft starter with Soft Starter ES 2007

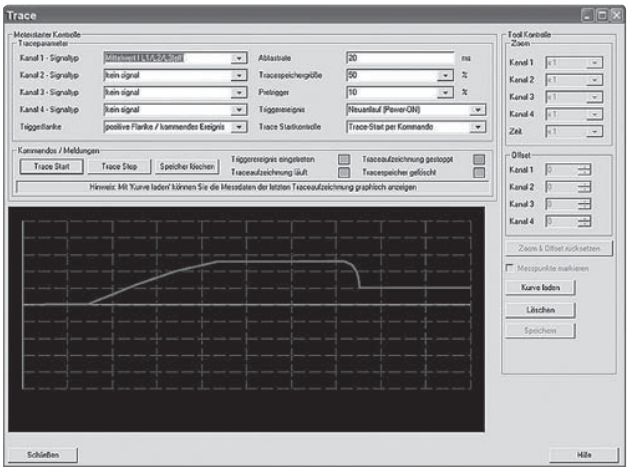

Graphic presentation of measured values with the trace function (oscilloscope function) of Soft Starter ES 2007 Standard and Premium

Soft Starter ES 2007

The Soft Starter ES software permits the quick and easy parameterization, monitoring and diagnostics of SIRIUS 3RW44 High Feature soft starters for service purposes. The device parameters can be configured directly on the PC and transferred to the soft starter through a serial cable or an optional PROFIBUS interface.

The advantages of Soft Starter ES:

- Clearly arranged configuring of device functions and their parameters – online and offline
- Effective diagnostics functions on the soft starter and display of the most important measured values
- Trace function (oscilloscope function) for recording measured values and events (in the Soft Starter ES Standard and Premium software versions).

Efficient engineering with new program versions

The Soft Starter ES software program is available in three versions which differ in their user-friendliness, scope of functions and price.

Soft starters ES	Basic	Standard	Premium
Access through the local interface on the device	✔	✔	✔
Parameter assignment	✔	✔	✔
Operating	✔	✔	✔
Diagnostics	✔	✔	✔
Creating templates	--	✔[1)]	✔
Exporting parameters	--	✔	✔
Comparison functions	--	✔	✔
Standards-conform printout according to EN ISO 7200	--	✔	✔
Service data (slave pointer, statistics data)	--	✔	✔
Access through PROFIBUS	--	--	✔
Group functions	--	--	✔
Teleservice through MPI	--	--	✔
S7 Routing	--	--	✔
STEP7 Object Manager	--	--	✔

1) Templates with Service Pack 1 and higher.

More functions

- Standards-conform printouts
  The software tool greatly simplifies machine documentation. Parameterization printouts according to EN ISO 7200 are possible. The elements to be printed are easy to select and compile as required.
- Easy creation of parameter templates
  Parameter templates can be created for devices and applications with only minimum differences in their parameters. These templates contain all the parameters which are needed for the parameterization. In addition it is possible to specify which of these parameters are fixed and which can be adapted, e. g. by the startup engineer.
- Group function
  For the user-friendly parameterization of numerous devices or applications of the same type, the programs of the SIRIUS ES software family offer a group function which enables the parameterization of several devices to be read out or written through PROFIBUS. In conjunction with typicals it is even possible to selectively adapt the same parameters in any number of parameterizations.
- Teleservice through MPI
  The Soft Starter ES Premium version supports the use of MPI Teleservice (comprising the Teleservice software and various Teleservice adapters) for remote diagnostics of the devices. This facilitates diagnostics and maintenance, and it shortens response times for service purposes.

Types of delivery and license

Soft Starter ES is available as follows:

- Floating license – the license for any one user at any one time
  - Authorizes any one user
  - Independent of the number of installations (unlike the single license which is allowed to be installed once only)
  - Only the actual use of the program has to be licensed
  - Trial license (free use of all program functions for 14 days for test and evaluation purposes, included on every product CD, available in the download file of the SIRIUS ES program in the Service&Support portal).

Following delivery versions are available in addition for Soft Starter ES 2007:

- Upgrade
  Upgrade from an old to a new version with expanded functions, e. g. upgrade from Soft Starter ES 2006 to Soft Starter ES 2007
- Powerpack
  Special pack for switching within the same software version to a more powerful version with more functionality, e. g. Powerpack Soft Starter ES 2007 for switching from Standard to Premium
- Software Update Service
  To keep you up to date at all times we offer a special service which supplies you automatically with all service packs and upgrades

New licensing procedure

To make licensing easier, the three versions of Soft Starter ES are available with immediate effect with the following license:

14 day trial license for Premium functions:
for test and evaluation purposes, included on every product CD, available also in the download file of the SIRIUS Soft Starter ES 2007 program at www.sea.siemens.com/softstarters.

System requirements

Soft Starter ES 2007 parameterization, start-up and diagnostics software for the SIRIUS 3RW44 soft starter	**Basic/Standard**	**Premium**
	Firmware version ≥ *E04* [1]	**Firmware version ≥ *E06*** [2]
Operating system	Windows 2000 (Service Pack 3 or 4), Windows XP Professional (Service Pack 2), Windows Vista Ultimate 32/ Business 32[3]	
Processor	≥ Pentium 800 MHz/≥ 1 GHz (Windows Vista)	
RAM	≥ 512 MB/≥ 1 GB (Windows Vista)	
Free space on hard disk	≥ 150 MB	
CD-ROM/DVD drive	Yes (only when installing from CD)	
Serial interface (COM)	Yes	
PC cable/parameterization cable/connection cable	Yes	
PROFIBUS communication module (optional)	--	Yes

1) SIRIUS 3RW44 with firmware version ≥ *E04*. Installed in starters delivered after December 2005.

2) SIRIUS 3RW44 with firmware version ≥ *E06*. Installed in starters delivered after May 2006.

3) Windows Vista Ultimate 32/ Business 32 from Soft Starter ES 2007+SP1.

Selection and ordering data

Parameterization and service software for SIRIUS 3RW44 soft starters

- Can be run under WIN 2000/WIN XP PROF/Windows Vista Ultimate 32/Business 32
- Without PC cable

Version	Order No.	List Price $ per PU	PS*	Weight per PU approx. kg
Soft Starter ES 2007 Basic				
Floating license for one user E-SW, software and documentation on CD, 3 languages (German/English/French), communication through system interface • License key on USB stick, Class A, including CD	**3ZS1 313-4CC10-0YA5**		1 unit	0.230
Soft Starter ES 2007 Standard				
Floating license for one user E-SW, software and documentation on CD, 3 languages (German/English/French), communication through system interface • License key on USB stick, Class A, including CD	**3ZS1 313-5CC10-0YA5**		1 unit	0.230

Version	Order No.	List Price $ per PU	PS*	Weight per PU approx. kg
Upgrade for Soft Starter ES 2006 Floating license for one user, E-SW, software and documentation on CD, license key on USB stick, Class A, 3 languages (German/English/French), communication through the system interface	**3ZS1 313-5CC10-0YE5**		1 unit	0.230
Powerpack for Soft Starter ES 2007 Basic Floating license for one user, E-SW, software and documentation on CD, license key on USB stick, Class A, 3 languages (German/English/French), communication through the system interface	**3ZS1 313-5CC10-0YD5**		1 unit	0.230
Software Update Service For 1 year with automatic extension, assuming the current software version is in use, E-SW, software and documentation on CD, communication through the system interface	**3ZS1 313-5CC10-0YL5**		1 unit	0.230
Soft Starter ES 2007 Premium				
Floating license for one user E-SW, software and documentation on CD, 3 languages (German/English/French), communication through system interface or PROFIBUS				
• License key on USB stick, Class A, including CD	**3ZS1 313-6CC10-0YA5**		1 unit	0.230
Upgrade for Soft Starter ES 2006 Floating license for one user, E-SW, software and documentation on CD, license key on USB stick, Class A, 3 languages (German/English/French), communication through the system interface or PROFIBUS	**3ZS1 313-6CC10-0YE5**		1 unit	0.230
Powerpack for Soft Starter ES 2007 Standard Floating license for one user, E-SW, software and documentation on CD, license key on USB stick, Class A, 3 languages (German/English/French), communication through the system interface or PROFIBUS	**3ZS1 313-6CC10-0YD5**		1 unit	0.230
Software Update Service For 1 year with automatic extension, assuming the current software version is in use, E-SW, software and documentation on CD, communication through the system interface or PROFIBUS	**3ZS1 313-6CC10-0YL5**		1 unit	0.230
PC cables				
 3UF7 940-0AA00-0 **For PC/PG communication with SIRIUS 3RW44 soft starters** Through the system interface, for connecting to the serial interface of the PC/PG	**3UF7 940-0AA00-0**		1 unit	0.150
Serial/USB				
 For PC/PG communication with SIRIUS 3RW44 soft starters Through the system interface, for connecting to the USB interface of the PC/PG	**3UF7 946-0AA00-0**		1 unit	0.150

Accessories

	For soft starters / Version / Type	Order No.	List Price $ per PU	PS*	Weight per PU approx. kg
PROFIBUS communication modules					
3RW49 00-0KC00	Modules can be plugged into the soft starters for integrating the starters in the PROFIBUS network with DPV1 slave functionality. On Y-link the soft starter has only DPV0 slave functionality.	**3RW49 00-0KC00**		1 unit	0.320
PROFINET communication modules					
3RW49 00-0NC00	For 3RW44 soft starter integration in the PROFINET network, suitable for devices with firmware version E12 or higher	**3RW49 00-0NC00**		1 unit	0.320
External display and operator modules					
3RW49 00-0AC00	For indicating and operating the functions provided by the soft starter using an externally mounted display and operator module in degree of protection IP54, N1, N12 (e. g. in the control cabinet door)	**3RW49 00-0AC00**		1 unit	0.320
	Connection cables				
	From the device interface (serial) of the 3RW44 soft starter to the external display and operator module				
	• Length 0.5 m, flat	**3UF7 932-0AA00-0**		1 unit	0.020
	• Length 0.5 m, round	**3UF7 932-0BA00-0**		1 unit	0.050
	• Length 1.0 m, round	**3UF7 937-0BA00-0**		1 unit	0.100
	• Length 2.5 m, round	**3UF7 933-0BA00-0**		1 unit	0.150
Box terminal blocks for soft starters					
3RT19	**Box terminal blocks**				
	3RW44 2. Included in the scope of supply				
	3RW44 3. • Up to 70 mm²	**3RT19 55-4G**		1 unit	0.230
	• Up to 120 mm²	**3RT19 56-4G**		1 unit	0.260
	3RW44 4. • Up to 240 mm²	**3RT19 66-4G**		1 unit	0.676

Spare parts

	For soft starters Type	Version	Order No.	List Price $ per PU	PS*	Weight per PU approx. kg
Covers for soft starters						
	Terminal covers for box terminals					
	Additional touch protection to be fitted at the box terminals (2 units required per device)					
	3RW44 2. and 3RW44 3.		**3RT19 56-4EA2**		1 unit	0.030
	3RW44 4.		**3RT19 66-4EA2**		1 unit	0.040
3RT19 .6-4EA1	**Terminal covers for cable lugs and busbar connections**					
	3RW44 2. and 3RW44 3.		**3RT19 56-4EA1**		1 unit	0.070
	3RW44 4.		**3RT19 66-4EA1**		1 unit	0.130
Operating instructions[1]						
	For 3RW44 soft starters		**3ZX10 12-0RW44-1AA1**			
Fans						
3RW49	**Fans**					
	3RW44 2. and 3RW44 3.	115 V AC	**3RW49 36-8VX30**		1 unit	0.300
		230 V AC	**3RW49 36-8VX40**		1 unit	0.300
	3RW44 4.	115 V AC	**3RW49 47-8VX30**		1 unit	0.500
		230 V AC	**3RW49 47-8VX40**		1 unit	0.500
	3RW44 5. and 3RW44 6.[2]	115 V AC	**3RW49 57-8VX30**		1 unit	0.800
		230 V AC	**3RW49 57-8VX40**		1 unit	0.800
	3RW44 6.[3]	115 V AC	**3RW49 66-8VX30**		1 unit	0.300
		230 V AC	**3RW49 66-8VX40**		1 unit	0.300

[1] The operating instructions are included in the scope of supply.
[2] 3RW44 6. mounting on output side.
[3] For mounting on front side.

More information

Application examples for normal starting (Class 10)

Normal starting Class 10 (up to 20 s with 350 % $I_{n\ motor}$),
The soft starter rating can be selected to be as high as the rating of the motor used.

Application		Conveyor belt	Roller conveyor	Compressor	Small fan	Pump	Hydraulic pump
Starting parameters[1)]							
• Voltage ramp and current limiting							
- Starting voltage	%	70	60	50	30	30	30
- Starting time	s	10	10	10	10	10	10
- Current limit value		Deactivated	Deactivated	4 x I_M	4 x I_M	Deactivated	Deactivated
• Torque ramp							
- Starting torque		60	50	40	20	10	10
- End torque		150	150	150	150	150	150
- Starting time		10	10	10	10	10	10
• Breakaway pulse		Deactivated (0 ms)	Deactivated (0 ms)	Deactivated (0 ms)	Deactivated (0 ms)	Deactivated (0 ms)	Deactivated (0 ms)
Ramp-down mode		Smooth ramp-down	Smooth ramp-down	Free ramp-down	Free ramp-down	Pump ramp-down	Free ramp-down

Application examples for heavy starting (Class 20)

Heavy starting Class 20 (up to 40 s with 350 % $I_{n\ motor}$),
The soft starter has to be selected one rating class higher than the motor used.

Application		Mixer	Centrifuge	Milling machine
Starting parameters[1)]				
• Voltage ramp and current limiting				
- Starting voltage	%	30	30	30
- Starting time	s	30	30	30
- Current limit value		4 x I_M	4 x I_M	4 x I_M
• Torque ramp				
- Starting torque		30	30	30
- End torque		150	150	150
- Starting time		30	30	30
• Breakaway pulse		Deactivated (0 ms)	Deactivated (0 ms)	Deactivated (0 ms)
Ramp-down mode		Free ramp-down	Free ramp-down	Free ramp-down or DC braking

Application examples for very heavy starting (Class 30)

Very heavy starting Class 30 (up to 60 s with 350 % $I_{n\ motor}$),
The soft starter has to be selected two rating classes higher than the motor used.

Application		Large fan	Mill	Crushers	Circular saw/bandsaw
Starting parameters[1)]					
• Voltage ramp and current limiting					
- Starting voltage	%	30	50	50	30
- Starting time	s	60	60	60	60
- Current limit value		4 x I_M	4 x I_M	4 x I_M	4 x I_M
• Torque ramp					
- Starting torque		20	50	50	20
- End torque		150	150	150	150
- Starting time		60	60	60	60
• Breakaway pulse		Deactivated (0 ms)	80 %, 300 ms	80 %, 300 ms	Deactivated (0 ms)
Ramp-down mode		Free ramp-down	Free ramp-down	Free ramp-down	Free ramp-down

Note:
These tables present sample set values and device sizes. They are intended only for the purposes of information and are not binding. The set values depend on the application in question and must be optimized during start-up.
The soft starter dimensions should be checked where necessary with the Win-Soft Starter software or with the help of Technical Assistance.

[1)] Actual motor starting times are load dependent.

Circuit concept

The SIRIUS 3RW44 soft starters can be operated in two different types of circuit.

- Inline circuit
  The controls for isolating and protecting the motor are simply connected in series with the soft starter. The motor is connected to the soft starter with three cables.
- Inside-delta circuit
  The wiring is similar to that of wye-delta starters. The phases of the soft starter are connected in series with the individual motor windings. The soft starter then only has to carry the phase current, amounting to about 58 % of the rated motor current (conductor current).

Comparison of the types of circuit

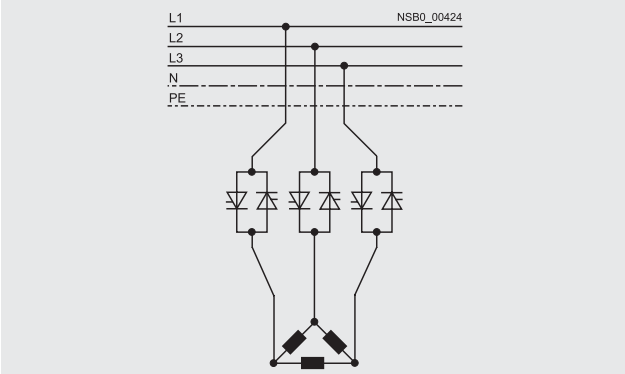

Inline circuit:
Rated current I_e corresponds to the rated motor current I_n,
3 cables to the motor

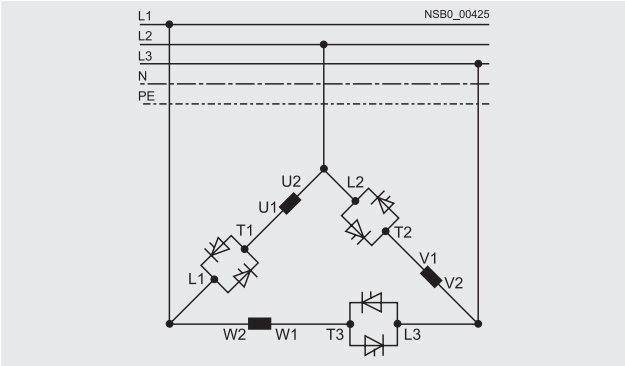

Inside-delta circuit:
Rated current I_e corresponds to approx. 58 % of the rated motor current I_n, 6 cables to the motor (as with wye-delta starters)

Which circuit?

Using the inline circuit involves the lowest wiring outlay. If the soft starter to motor connections are long, this circuit is preferable. With the inside-delta circuit there is double the wiring complexity but a smaller size of device can be used at the same rating. It is also recommended to use an isolating contactor in series with each motor winding.

Thanks to the choice of operating mode between the inline circuit and inside-delta circuit, it is always possible to select the most favorable solution.

The braking function is possible only in the inline circuit.

Configuration

The 3RW44 solid-state soft starters are designed for normal starting. In case of heavy starting or increased starting frequency, a larger device must be selected.

For long starting times it is recommended to have a PTC sensor in the motor. This also applies for the ramp-down modes smooth ramp-down, pump ramp-down and DC braking, because during the ramp-down time in these modes, an additional current loading applies in contrast to free ramp-down.

In the motor feeder between the SIRIUS 3RW soft starter and the motor, no capacitive elements are permitted (e. g. no reactive-power compensation equipment). In addition, neither static systems for reactive-power compensation nor dynamic PFC (Power Factor Correction) must be operated in parallel during starting and ramp-down of the soft starter. This is important to prevent faults arising on the compensation equipment and/or the soft starter.

All elements of the main circuit (such as fuses and controls) should be dimensioned for direct starting, following the local short-circuit conditions. Fuses, controls and overload relays must be ordered separately.

A bypass contact system and solid-state overload relay are already integrated in the 3RW44 soft starter and therefore do not have to be ordered separately.

The harmonic component load for starting currents must be taken into consideration for the selection of motor starter protectors (selection of release).

Note:
When induction motors are switched on, voltage drops normally appear on starters of all types (direct starters, wye-delta starters, soft starters). The infeed transformer must always be dimensioned such that the voltage dip when starting the motor remains within the permissible tolerance. If the infeed transformer is dimensioned with only a small margin, it is best for the control voltage to be supplied from a separate circuit (independently of the main voltage) in order to avoid the potential switching off of the soft starter.

Device interface, PROFIBUS DP communication module, Soft Starter ES parameterizing and operating software

The 3RW44 electronic soft starters have a PC interface for communicating with the Soft Starter ES software or for connecting the external display and operator module. If the optional PROFIBUS communication module is used, the 3RW44 soft starter can be integrated in the PROFIBUS network and communicate using the GSD file or Soft Starter ES Premium software.

System Manual for SIRIUS 3RW44

Besides containing all important information on configuring, commissioning and servicing, the manual also contains example circuits and the technical specifications for all devices. This manual can be downloaded off the internet.

Win-Soft Starter selection and simulation program

With this software, you can simulate and select all Siemens soft starters, taking into account various parameters such as mains properties, motor and load data, and special application requirements.

The software is a valuable tool, which makes complicated, lengthy manual calculations for determining the required soft starters superfluous.

The Win-Soft Starter selection and simulation program can be downloaded free of charge from:
www.usa.siemens.com/softstarters > Software

More information can be found on the Internet at:
www.usa.siemens.com/softstarters

Overview

The family of 3RW40 and 3RW44 softstarters are available in stand alone enclosed control designs for smooth starting and stopping of standard NEMA design B three phase inductive motors, thus eliminating physical stresses to the system and load while minimizing starting current. These pre-engineered enclosed designs offer convenience and flexibility in and UL/CSA certified offering. Enclosed styles are available in combination and non-combination configurations through 600HP and system voltages of 200V, 230V, 480V, and 600V.

The Class 73 offers either the 3RW40 or 3RW44 in a non-combination style offering. These non-combination styles come standard with a choice of Type 1, 3R, 12, 4 NEMA rated enclosure, a control transformer, Sirius softstarter with built-in overload and bypass, line side power terminal block, and a reset pushbutton. The enclosed offering can be powerfully matched with a wide variety of factory modified options such as pushbutton control, pilot lights, metering and other control options such as isolation contactors and emergency start bypass starters. 3RW44 enclosed styles are also available with optional through the door keypad and Profibus communication.

The Class 74 offering includes all of the features of the Class 73 in a combination style design. Standard options are either a circuit breaker or fusible disconnect providing short circuit protection and soft starting in one package.

Application

The Class 73/74 product is a fully enclosed solid state reduced voltage starter designed for a wide variety of industrial applications. The enclosed softstarter offerings are ideal for new as well as existing applications where total motor controls is required.

Proper selection based on application data is made simple following these easy steps:

- Select proper RVSS by application
  - Select the 3RW40 versus the 3RW44 using the application info provided in the open section of the catalog
- Select the rating chart for normal starting or sever duty starting
  - Normal starting is rated at 350% of rated motor current IM for 10 seconds and based on starts per hour – representative of a class 20 application.
  - Severe starting is rated at 350% of rated motor current Im for 20 seconds and based on starts per hour – representative of a Class 20 application
- Select model using Motor nameplate data
  - Identify correct motor voltage column
  - Select rate current or HP row
  - Find ordering number under desired enclosure type column (e.g. NEMA 1)
  - Select appropriate system voltage
- Select factory modification on page 6/40[1)]

Example:
3RW44, N12, CB disconnect, 460V, 200HP with a start/stop and red run light

Order No.
74MT34BFAP A1 FC

Product Nomenclature

Class 73 and 74 Enclosed Soft Starters

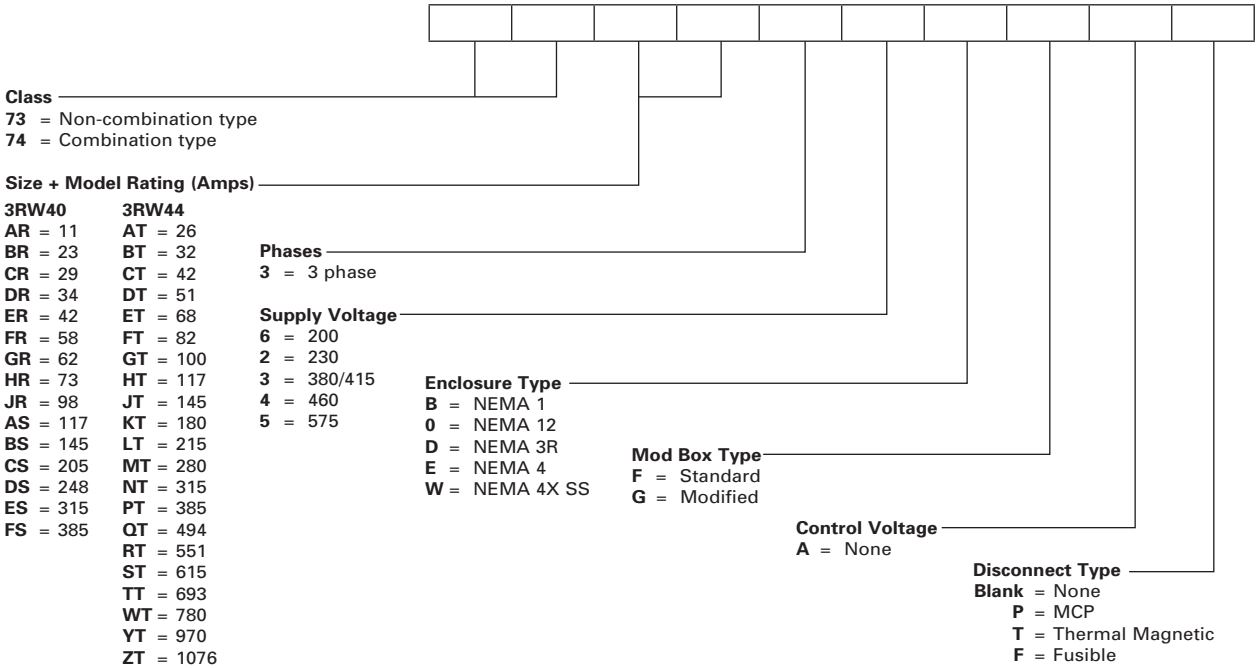

1) Some modifications will require a larger 'Modified' box than the standard box e.g. Isolation contactor, space heater, etc. See page 17-237 for instructions.

3RW40 Enclosed features:
- Available in NEMA 1,12,3R,4, and 4 stainless steel
- Compact size
- Built-in Bypass contactor
- Voltage ramp up and ramp down
- Current limit adjustment of 125 - 550%
- Internal overload class 10,15,or 20
- Internal self protection
- Fault monitoring
- Isolation Contactor

Ordering Information

- ► Enclosed devices should be ordered by the FLA of the motor.
- ► The 3RW40 is designed for normal starting applications.
- ► For factory modifications see page 17-237.
- ► For complete derating and application info see page 17-253
- ► For dimensional drawings see page 17-289.

Class 73 non-combination starters include:
- NEMA rated enclosure
- 3RW40 Sirius softstarter with built-in OL and bypass
- Control Circuit Transformer
- Line side power terminal block
- Reset button
- Isolation Contactor

Ideal applications for 3RW40 enclosed softstarters
- Fans
- Pumps
- Easy starting loads starting in less than 10 seconds

Class 73 starters are built to UL and CSA standards

3RW40 for Standard Applications

Enclosed Non-Combination (Starter Only)

Rated Operating Current	MAX HP①				KW	Class 10 Light Duty (350% * Ie for 10s)②											
	200V	230V	460V	575V	380V	OPEN Style (Starter Only)	NEMA 1	List Price $	NEMA 3R	List Price $	NEMA 12	List Price $	NEMA 4	List Price $	NEMA 4/4X Stainless Steel	List Price $
11	3	3	7.5	—	6	3RW4024-1BB14	**73AR3_BFA**		**73AR3_DFA**		**73AR3_0FA**		**73AR3_EFA**		**73AR3_WFA**	
23	5	7.5	15	—	13	3RW4026-1BB14	**73BR3_BFA**		**73BR3_DFA**		**73BR3_0FA**		**73BR3_EFA**		**73BR3_WFA**	
29	7.5	10	20	—	16	3RW4027-1BB14	**73CR3_BFA**		**73CR3_DFA**		**73CR3_0FA**		**73CR3_EFA**		**73CR3_WFA**	
34	10	10	25	—	18	3RW4028-1BB14	**73DR3_BFA**		**73DR3_DFA**		**73DR3_0FA**		**73DR3_EFA**		**73DR3_WFA**	
42	10	15	30	—	23	3RW4036-1BB14	**73ER3_BFA**		**73ER3_DFA**		**73ER3_0FA**		**73ER3_EFA**		**73ER3_WFA**	
58	15	20	40	—	31	3RW4037-1BB14	**73FR3_BFA**		**73FR3_DFA**		**73FR3_0FA**		**73FR3_EFA**		**73FR3_WFA**	
62	20	20	40	—	33	3RW4038-1BB14	**73GR3_BFA**		**73GR3_DFA**		**73GR3_0FA**		**73GR3_EFA**		**73GR3_WFA**	
73	20	25	50	—	39	3RW4046-1BB14	**73HR3_BFA**		**73HR3_DFA**		**73HR3_0FA**		**73HR3_EFA**		**73HR3_WFA**	
98	30	30	75	—	52	3RW4047-1BB14	**73JR3_BFA**		**73JR3_DFA**		**73JR3_0FA**		**73JR3_EFA**		**73JR3_WFA**	
						200V	**6**		**6**		**6**		**6**		**6**	
						230V	**2**		**2**		**2**		**2**		**2**	
						380V	**3**		**3**		**3**		**3**		**3**	
						460V	**4**		**4**		**4**		**4**		**4**	

① Starter size is dependent on the nameplate Full Load Amps (FLA) rating of the motor. HPs are for reference only. Enclosed ratings are at 40°C

② Starter selection is dependent on type of application. Ie = FLA rating of motor

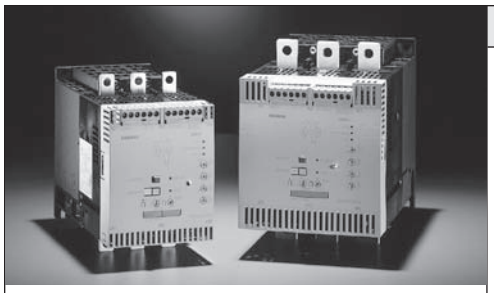

3RW40 Enclosed features:
- Available in NEMA 1, 12, 3R, 4, and 4 stainless steel
- Compact size
- Built-in bypass contactor
- Voltage ramp up and ramp down
- Current limit adjustment of 125 - 550%
- Internal overload class 10, 15, or 20
- Internal self protection
- Fault monitoring

Ordering Information

- ► Enclosed devices should be ordered by the FLA of the motor.
- ► The 3RW40 is designed for normal starting applications (Class 10 applications).
- ► For factory modifications see page 17-237.
- ► For complete derating and application info see page 17-253.
- ► For dimensional drawings see page 17-289.

Class 73 non-combination starters include:
- NEMA rated enclosure
- 3RW40 Sirius softstarter with built-in OL and bypass
- Control circuit transformer
- Line side power terminal block
- Reset button

Ideal applications for 3RW40 enclosed softstarters:
- Fans
- Pumps
- Building/construction machines
- Presses
- Escalators
- Transport systems
- Air conditioning systems
- Ventilators
- Assembly lines

Class 73 starters are built to UL and CSA standards.

For all technical information, please consult the 2006 Industrial Controls Catalog or contact your local sales support center.

3RW40 for Standard Applications

Enclosed Non-Combination (Starter Only)

Rated Operating Current	MAX HP① 200V	230V	460V	575V	KW 380V	Class 10 Light Duty (350% * Im for 10s)② OPEN Style (Starter Only)	NEMA 1	List Price $	NEMA 3R	List Price $	NEMA 12	List Price $	NEMA 4	List Price $	NEMA 4/4X Stainless Steel	List Price $
117	30	40	75	—	56	3RW4055-6BB34	73AS3_BFA		73AS3_DFA		73AS3_0FA		73AS3_EFA		73AS3_WFA	
145	40	50	100	—	75	3RW4056-6BB34	73BS3_BFA		73BS3_DFA		73BS3_0FA		73BS3_EFA		73BS3_WFA	
205	60	75	150	—	112	3RW4073-6BB34	73CS3_BFA		73CS3_DFA		73CS3_0FA		73CS3_EFA		73CS3_WFA	
248	75	100	200	—	149	3RW4074-6BB34	73DS3_BFA		73DS3_DFA		73DS3_0FA		73DS3_EFA		73DS3_WFA	
315	100	125	250	—	186	3RW4075-6BB34	73ES3_BFA		73ES3_DFA		73ES3_0FA		73ES3_EFA		73ES3_WFA	
385	125	150	300	—	224	3RW4076-6BB34	73FS3_BFA		73FS3_DFA		73FS3_0FA		73FS3_EFA		73FS3_WFA	
						200V	6		6		6		6		6	
						230V	2		2		2		2		2	
						380V	3		3		3		3		3	
						460V	4		4		4		4		4	
117	—	—	75	100	—	3RW4055-6BB35	73AS35BFA		73AS35DFA		73AS350FA		73AS35EFA		73AS35WFA	
145	—	—	100	150	—	3RW4056-6BB35	73BS35BFA		73BS35DFA		73BS350FA		73BS35EFA		73BS35WFA	
205	—	—	150	200	—	3RW4073-6BB35	73CS35BFA		73CS35DFA		73CS350FA		73CS35EFA		73CS35WFA	
248	—	—	200	250	—	3RW4074-6BB35	73DS35BFA		73DS35DFA		73DS350FA		73DS35EFA		73DS35WFA	
315	—	—	250	300	—	3RW4075-6BB35	73ES35BFA		73ES35DFA		73ES350FA		73ES35EFA		73ES35WFA	
385	—	—	300	400	—	3RW4076-6BB35	73FS35BFA		73FS35DFA		73FS350FA		73FS35EFA		73FS35WFA	

Enclosed Non-Combination (Starter Only)

Rated Operating Current	MAX HP① 200V	230V	460V	575V	KW 380V	Class 20 Severe Duty (350% * Ie for 20s)② OPEN Style (Starter Only)	NEMA 1	List Price $	NEMA 3R	List Price $	NEMA 12	List Price $	NEMA 4	List Price $	NEMA 4/4X Stainless Steel	List Price $
112	30	40	75	—	56	3RW4055-6BB34	73AS3_BFA		73AS3_DFA		73AS3_0FA		73AS3_EFA		73AS3_WFA	
132	40	50	100	—	75	3RW4056-6BB34	73BS3_BFA		73BS3_DFA		73BS3_0FA		73BS3_EFA		73BS3_WFA	
185	60	60	125	—	93	3RW4073-6BB34	73CS3_BFA		73CS3_DFA		73CS3_0FA		73CS3_EFA		73CS3_WFA	
205	60	75	150	—	112	3RW4074-6BB34	73DS3_BFA		73DS3_DFA		73DS3_0FA		73DS3_EFA		73DS3_WFA	
280	75	100	200	—	149	3RW4075-6BB34	73ES3_BFA		73ES3_DFA		73ES3_0FA		73ES3_EFA		73ES3_WFA	
340	100	125	250	—	186	3RW4076-6BB34	73FS3_BFA		73FS3_DFA		73FS3_0FA		73FS3_EFA		73FS3_WFA	
						200V	6		6		6		6		6	
						230V	2		2		2		2		2	
						380V	3		3		3		3		3	
						460V	4		4		4		4		4	
112	—	—	75	75	—	3RW4055-6BB35	73AS35BFA		73AS35DFA		73AS350FA		73AS35EFA		73AS35WFA	
132	—	—	100	125	—	3RW4056-6BB35	73BS35BFA		73BS35DFA		73BS350FA		73BS35EFA		73BS35WFA	
185	—	—	125	150	—	3RW4073-6BB35	73CS35BFA		73CS35DFA		73CS350FA		73CS35EFA		73CS35WFA	
205	—	—	150	200	—	3RW4074-6BB35	73DS35BFA		73DS35DFA		73DS350FA		73DS35EFA		73DS35WFA	
280	—	—	200	250	—	3RW4075-6BB35	73ES35BFA		73ES35DFA		73ES350FA		73ES35EFA		73ES35WFA	
340	—	—	250	300	—	3RW4076-6BB35	73FS35BFA		73FS35DFA		73FS350FA		73FS35EFA		73FS35WFA	

① Starter size is dependent on the nameplate Full Load Amps (FLA) rating of the motor. HPs are for reference only. Enclosed ratings are at 40°C.
② Starter selection is dependent on type of application. Im = FLA rating of motor.

3RW40 Enclosed features:
- Available in NEMA 1, 12, 3R, 4, and 4 stainless steel
- Compact size
- Built-in Bypass contactor
- Voltage ramp up and ramp down
- Current limit adjustment of 125 - 550%
- Internal overload class 10, 15, or 20
- Internal self protection
- Fault monitoring
- Isolation Contactor

Ordering Information

- ▶ Enclosed devices should be ordered by the FLA of the motor.
- ▶ The 3RW40 is designed for normal starting applications.
- ▶ For factory modifications see page 17-237.
- ▶ For complete derating and application info see page 17-253
- ▶ For dimensional drawings see page 17-289.

Class 74 non-combination starters include:
- NEMA rated enclosure
- Circuit Breaker disconnect with shunt trip
- 3RW40 Sirius softstarter with built-in OL and bypass
- Control Circuit Transformer
- Isolation Contactor

Ideal applications for 3RW40 enclosed softstarters
- Fans
- Pumps
- Easy starting loads starting in less than 10 seconds

Class 74 starters are built to UL and CSA standards

3RW40 for Standard Applications

Enclosed Circuit Breaker Combination (Starter With Circuit Breaker Disconnect)

Rated Operating Current	MAX HP①				KW	Class 10 Light Duty (350% * Ie for 10s)②										
	200V	230V	460V	575V	380V	OPEN Style (Starter Only)	NEMA 1	List Price $	NEMA 3R	List Price $	NEMA 12	List Price $	NEMA 4	List Price $	NEMA 4/4X Stainless Steel	List Price $
11	3	3	7.5	—	6	3RW4024-1BB14	74AR3_BFAP		74AR3_DFAP		74AR3_0FAP		74AR3_EFAP		74AR3_WFAP	
23	5	7.5	15	—	13	3RW4026-1BB14	74BR3_BFAP		74BR3_DFAP		74BR3_0FAP		74BR3_EFAP		74BR3_WFAP	
29	7.5	10	20	—	16	3RW4027-1BB14	74CR3_BFAP		74CR3_DFAP		74CR3_0FAP		74CR3_EFAP		74CR3_WFAP	
34	10	10	25	—	18	3RW4028-1BB14	74DR3_BFAP		74DR3_DFAP		74DR3_0FAP		74DR3_EFAP		74DR3_WFAP	
42	10	15	30	—	23	3RW4036-1BB14	74ER3_BFAP		74ER3_DFAP		74ER3_0FAP		74ER3_EFAP		74ER3_WFAP	
58	15	20	40	—	31	3RW4037-1BB14	74FR3_BFAP		74FR3_DFAP		74FR3_0FAP		74FR3_EFAP		74FR3_WFAP	
62	20	20	40	—	33	3RW4038-1BB14	74GR3_BFAP		74GR3_DFAP		74GR3_0FAP		74GR3_EFAP		74GR3_WFAP	
73	20	25	50	—	39	3RW4046-1BB14	74HR3_BFAP		74HR3_DFAP		74HR3_0FAP		74HR3_EFAP		74HR3_WFAP	
98	30	30	75	—	52	3RW4047-1BB14	74JR3_BFAP		74JR3_DFAP		74JR3_0FAP		74JR3_EFAP		74JR3_WFAP	
						200V	6		6		6		6		6	
						230V	2		2		2		2		2	
						380V	3		3		3		3		3	
						460V	4		4		4		4		4	

① Starter size is dependent on the nameplate Full Load Amps (FLA) rating of the motor. HPs are for reference only. Enclosed ratings are at 40°C

② Starter selection is dependent on type of application. Ie = FLA rating of motor

3RW40 Enclosed features:
- Available in NEMA 1, 12, 3R, 4, and 4 stainless steel
- Compact size
- Built-in bypass contactor
- Voltage ramp up and ramp down
- Current limit adjustment of 125 - 550%
- Internal overload class 10, 15, or 20
- Internal self protection
- Fault monitoring

Ordering Information

- ► Enclosed devices should be ordered by the FLA of the motor.
- ► The 3RW40 is designed for normal starting applications (Class 10 applications).
- ► For factory modifications see page 17-237.
- ► For complete derating and application info see page 17-264.
- ► For dimensional drawings see page 17-289.

Class 74 non-combination starters include:
- NEMA rated enclosure
- Circuit breaker disconnect with shunt trip
- 3RW40 Sirius softstarter with built-in OL and bypass
- Control circuit transformer

Ideal applications for 3RW40 enclosed softstarters:
- Fans
- Pumps
- Building/construction machines
- Presses
- Escalators
- Transport systems
- Air conditioning systems
- Ventilators
- Assembly lines

Class 74 starters are built to UL and CSA standards.

For all technical information, please consult the 2006 Industrial Controls Catalog or contact your local sales support center.

3RW40 for Standard Applications

Enclosed Circuit Breaker Combination (Starter with Circuit Breaker Disconnect)

Rated Operating Current	MAX HP①				KW	Class 10 Light Duty (350% * Im for 10s)②										
	200V	230V	460V	575V	380V	OPEN Style (Starter Only)	NEMA 1	List Price $	NEMA 3R	List Price $	NEMA 12	List Price $	NEMA 4	List Price $	NEMA 4/4X Stainless Steel	List Price $
117	30	40	75	—	56	3RW4055-6BB34	74AS3_BFAP		74AS3_DFAP		74AS3_0FAP		74AS3_EFAP		74AS3_WFAP	
145	40	50	100	—	75	3RW4056-6BB34	74BS3_BFAP		74BS3_DFAP		74BS3_0FAP		74BS3_EFAP		74BS3_WFAP	
205	60	75	150	—	112	3RW4073-6BB34	74CS3_BFAP		74CS3_DFAP		74CS3_0FAP		74CS3_EFAP			
248	75	100	200	—	149	3RW4074-6BB34	74DS3_BFAP		74DS3_DFAP		74DS3_0FAP		74DS3_EFAP			
315	100	125	250	—	186	3RW4075-6BB34	74ES3_BFAP		74ES3_DFAP		74ES3_0FAP		74ES3_EFAP			
385	125	150	300	—	224	3RW4076-6BB34	74FS3_BFAP		74FS3_DFAP		74FS3_0FAP		74FS3_EFAP			
						200V	6		6		6		6		6	
						230V	2		2		2		2		2	
						380V	3		3		3		3		3	
						460V	4		4		4		4		4	
117	—	—	75	100	—	3RW4055-6BB35	74AS35BFAP		74AS35DFAP		74AS350FAP		74AS35EFAP		74AS35WFAP	
145	—	—	100	150	—	3RW4056-6BB35	74BS35BFAP		74BS35DFAP		74BS350FAP		74BS35EFAP		74BS35WFAP	
205	—	—	150	200	—	3RW4073-6BB35	74CS35BFAP		74CS35DFAP		74CS350FAP		74CS35EFAP			
248	—	—	200	250	—	3RW4074-6BB35	74DS35BFAP		74DS35DFAP		74DS350FAP		74DS35EFAP			
315	—	—	250	300	—	3RW4075-6BB35	74ES35BFAP		74ES35DFAP		74ES350FAP		74ES35EFAP			
385	—	—	300	400	—	3RW4076-6BB35	74FS35BFAP		74FS35DFAP		74FS350FAP		74FS35EFAP			

Enclosed Circuit Breaker Combination (Starter with Circuit Breaker Disconnect)

Rated Operating Current	MAX HP①				KW	Class 20 Severe Duty (350% * Ie for 20s)②										
	200V	230V	460V	575V	380V	OPEN Style (Starter Only)	NEMA 1	List Price $	NEMA 3R	List Price $	NEMA 12	List Price $	NEMA 4	List Price $	NEMA 4/4X Stainless Steel	List Price $
112	30	40	75	—	56	3RW4055-6BB34	74AS3_BFAP		74AS3_DFAP		74AS3_0FAP		74AS3_EFAP		74AS3_WFAP	
132	40	50	100	—	75	3RW4056-6BB34	74BS3_BFAP		74BS3_DFAP		74BS3_0FAP		74BS3_EFAP		74BS3_WFAP	
185	60	60	125	—	93	3RW4073-6BB34	74CS3_BFAP		74CS3_DFAP		74CS3_0FAP		74CS3_EFAP			
205	60	75	150	—	112	3RW4074-6BB34	74DS3_BFAP		74DS3_DFAP		74DS3_0FAP		74DS3_EFAP			
280	75	100	200	—	149	3RW4075-6BB34	74ES3_BFAP		74ES3_DFAP		74ES3_0FAP		74ES3_EFAP			
340	100	125	250	—	186	3RW4076-6BB34	74FS3_BFAP		74FS3_DFAP		74FS3_0FAP		74FS3_EFAP			
						200V	6		6		6		6		6	
						230V	2		2		2		2		2	
						380V	3		3		3		3		3	
						460V	4		4		4		4		4	
112	—	—	75	75	—	3RW4055-6BB35	74AS35BFAP		74AS35DFAP		74AS350FAP		74AS35EFAP		74AS35WFAP	
132	—	—	100	125	—	3RW4056-6BB35	74BS35BFAP		74BS35DFAP		74BS350FAP		74BS35EFAP		74BS35WFAP	
185	—	—	125	150	—	3RW4073-6BB35	74CS35BFAP		74CS35DFAP		74CS350FAP		74CS35EFAP			
205	—	—	150	200	—	3RW4074-6BB35	74DS35BFAP		74DS35DFAP		74DS350FAP		74DS35EFAP			
280	—	—	200	250	—	3RW4075-6BB35	74ES35BFAP		74ES35DFAP		74ES350FAP		74ES35EFAP			
340	—	—	250	300	—	3RW4076-6BB35	74FS35BFAP		74FS35DFAP		74FS350FAP		74FS35EFAP			

① Starter size is dependent on the nameplate Full Load Amps (FLA) rating of the motor. HPs are for reference only. Enclosed ratings are at 40°C.

② Starter selection is dependent on type of application. Im = FLA rating of motor.

3RW40 Enclosed features:
- Available in NEMA 1, 12, 3R, 4, and 4 stainless steel
- Compact size
- Built-in Bypass contactor
- Voltage ramp up and ramp down
- Current limit adjustment of 125 - 550%
- Internal overload class 10,15,or 20
- Internal self protection
- Fault monitoring
- Isolation Contactor

Ordering Information

- ► Enclosed devices should be ordered by the FLA of the motor.
- ► The 3RW40 is designed for normal starting applications.
- ► For factory modifications see page 17-237.
- ► For complete derating and application info see page 17-253
- ► For dimensional drawings see page 17-289.

Class 73 non-combination starters include:
- NEMA rated enclosure
- Fusible Disconnect
- 3RW40 Sirius softstarter with built-in OL and bypass
- Control Circuit Transformer
- Isolation Contactor

Ideal applications for 3RW40 enclosed softstarters
- Fans
- Pumps
- Easy starting loads starting in less than 10 seconds

Class 74 starters are built to UL and CSA standards

3RW40 for Standard Applications

Enclosed Fusible Combination (Starter With Fusible Disconnect)

Rated Operating Current	MAX HP①				KW	Class 10 Light Duty (350% * Ie for 10s)②											
	200V	230V	460V	575V	380V	OPEN Style (Starter Only)	NEMA 1	List Price $	NEMA 3R	List Price $	NEMA 12	List Price $	NEMA 4	List Price $	NEMA 4/4X Stainless Steel	List Price $
11	3	3	7.5	—	6	3RW4024-1BB14	74AR3_BFAF		74AR3_DFAF		74AR3_0FAF		74AR3_EFAF		74AR3_WFAF	
23	5	7.5	15	—	13	3RW4026-1BB14	74BR3_BFAF		74BR3_DFAF		74BR3_0FAF		74BR3_EFAF		74BR3_WFAF	
29	7.5	10	20	—	16	3RW4027-1BB14	74CR3_BFAF		74CR3_DFAF		74CR3_0FAF		74CR3_EFAF		74CR3_WFAF	
34	10	10	25	—	18	3RW4028-1BB14	74DR3_BFAF		74DR3_DFAF		74DR3_0FAF		74DR3_EFAF		74DR3_WFAF	
42	10	15	30	—	23	3RW4036-1BB14	74ER3_BFAF		74ER3_DFAF		74ER3_0FAF		74ER3_EFAF		74ER3_WFAF	
58	15	20	40	—	31	3RW4037-1BB14	74FR3_BFAF		74FR3_DFAF		74FR3_0FAF		74FR3_EFAF		74FR3_WFAF	
62	20	20	40	—	33	3RW4038-1BB14	74GR3_BFAF		74GR3_DFAF		74GR3_0FAF		74GR3_EFAF		74GR3_WFAF	
73	20	25	50	—	39	3RW4046-1BB14	74HR3_BFAF		74HR3_DFAF		74HR3_0FAF		74HR3_EFAF		74HR3_WFAF	
98	30	30	75	—	52	3RW4047-1BB14	74JR3_BFAF		74JR3_DFAF		74JR3_0FAF		74JR3_EFAF		74JR3_WFAF	
						200V	6		6		6		6		6	
						230V	2		2		2		2		2	
						380V	3		3		3		3		3	
						460V	4		4		4		4		4	

① Starter size is dependent on the nameplate Full Load Amps (FLA) rating of the motor. HPs are for reference only. Enclosed ratings are at 40°C

② Starter selection is dependent on type of application. Ie = FLA rating of motor

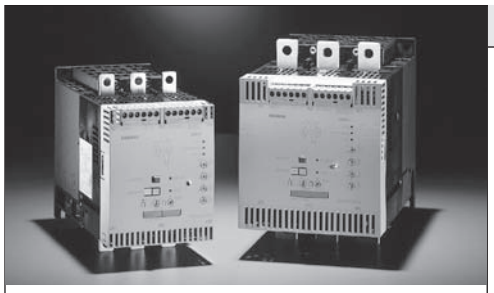

3RW40 Enclosed features:
- Available in NEMA 1, 12, 3R, 4, and 4 stainless steel
- Compact size
- Built-in bypass contactor
- Voltage ramp up and ramp down
- Current limit adjustment of 125 - 550%
- Internal overload class 10, 15, or 20
- Internal self protection
- Fault monitoring

Ordering Information

- ► Enclosed devices should be ordered by the FLA of the motor.
- ► The 3RW40 is designed for normal starting applications (Class 10 applications).
- ► For factory modifications see page 17-237.
- ► For complete derating and application info see page 17-264.
- ► For dimensional drawings see page 17-289.

Class 74 combination starters include:
- NEMA rated enclosure
- Fusible disconnect
- 3RW40 Sirius softstarter with built-in OL and bypass
- Control circuit transformer

Ideal applications for 3RW40 enclosed softstarters:
- Fans
- Pumps
- Building/construction machines
- Presses
- Escalators
- Transport systems
- Air conditioning systems
- Ventilators
- Assembly lines

Class 74 starters are built to UL and CSA standards.

For all technical information, please consult the 2006 Industrial Controls Catalog or contact your local sales support center.

3RW40 for Standard Applications

Enclosed Fusible Combination (Starter with Fusible Disconnect)

Rated Operating Current	MAX HP① 200V	230V	460V	575V	KW 380V	Class 10 Light Duty (350% * Im for 10s)② OPEN Style (Starter Only)	NEMA 1	List Price $	NEMA 3R	List Price $	NEMA 12	List Price $	NEMA 4	List Price $	NEMA 4/4X Stainless Steel	List Price $
117	30	40	75	—	56	3RW4055-6BB34	74AS3_BFAF		74AS3_DFAF		74AS3_0FAF		74AS3_EFAF		74AS3_WFAF	
145	40	50	100	—	75	3RW4056-6BB34	74BS3_BFAF		74BS3_DFAF		74BS3_0FAF		74BS3_EFAF		74BS3_WFAF	
205	60	75	150	—	112	3RW4073-6BB34	74CS3_BFAF		74CS3_DFAF		74CS3_0FAF		74CS3_EFAF			
248	75	100	200	—	149	3RW4074-6BB34	74DS3_BFAF		74DS3_DFAF		74DS3_0FAF		74DS3_EFAF			
315	100	125	250	—	186	3RW4075-6BB34	74ES3_BFAF		74ES3_DFAF		74ES3_0FAF		74ES3_EFAF			
385	125	150	300	—	224	3RW4076-6BB34	74FS3_BFAF		74FS3_DFAF		74FS3_0FAF		74FS3_EFAF			
						200V	6		6		6		6		6	
						230V	2		2		2		2		2	
						380V	3		3		3		3		3	
						460V	4		4		4		4		4	
117	—	—	75	100	—	3RW4055-6BB35	74AS35BFAF		74AS35DFAF		74AS350FAF		74AS35EFAF		74AS35WFAF	
145	—	—	100	150	—	3RW4056-6BB35	74BS35BFAF		74BS35DFAF		74BS350FAF		74BS35EFAF		74BS35WFAF	
205	—	—	150	200	—	3RW4073-6BB35	74CS35BFAF		74CS35DFAF		74CS350FAF		74CS35EFAF			
248	—	—	200	250	—	3RW4074-6BB35	74DS35BFAF		74DS35DFAF		74DS350FAF		74DS35EFAF			
315	—	—	250	300	—	3RW4075-6BB35	74ES35BFAF		74ES35DFAF		74ES350FAF		74ES35EFAF			
385	—	—	300	400	—	3RW4076-6BB35	74FS35BFAF		74FS35DFAF		74FS350FAF		74FS35EFAF			

Enclosed Fusible Combination (Starter with Fusible Disconnect)

Rated Operating Current	MAX HP① 200V	230V	460V	575V	KW 380V	Class 20 Severe Duty (350% * Ie for 20s)② OPEN Style (Starter Only)	NEMA 1	List Price $	NEMA 3R	List Price $	NEMA 12	List Price $	NEMA 4	List Price $	NEMA 4/4X Stainless Steel	List Price $
112	30	40	75	—	56	3RW4055-6BB34	74AS3_BFAF		74AS3_DFAF		74AS3_0FAF		74AS3_EFAF		74AS3_WFAF	
132	40	50	100	—	75	3RW4056-6BB34	74BS3_BFAF		74BS3_DFAF		74BS3_0FAF		74BS3_EFAF		74BS3_WFAF	
185	60	60	125	—	93	3RW4073-6BB34	74CS3_BFAF		74CS3_DFAF		74CS3_0FAF		74CS3_EFAF			
205	60	75	150	—	112	3RW4074-6BB34	74DS3_BFAF		74DS3_DFAF		74DS3_0FAF		74DS3_EFAF			
280	75	100	200	—	149	3RW4075-6BB34	74ES3_BFAF		74ES3_DFAF		74ES3_0FAF		74ES3_EFAF			
340	100	125	250	—	186	3RW4076-6BB34	74FS3_BFAF		74FS3_DFAF		74FS3_0FAF		74FS3_EFAF			
						200V	6		6		6		6		6	
						230V	2		2		2		2		2	
						380V	3		3		3		3		3	
						460V	4		4		4		4		4	
112	—	—	75	75	—	3RW4055-6BB35	74AS35BFAF		74AS35DFAF		74AS350FAF		74AS35EFAF		74AS35WFAF	
132	—	—	100	125	—	3RW4056-6BB35	74BS35BFAF		74BS35DFAF		74BS350FAF		74BS35EFAF		74BS35WFAF	
185	—	—	125	150	—	3RW4073-6BB35	74CS35BFAF		74CS35DFAF		74CS350FAF		74CS35EFAF			
205	—	—	150	200	—	3RW4074-6BB35	74DS35BFAF		74DS35DFAF		74DS350FAF		74DS35EFAF			
280	—	—	200	250	—	3RW4075-6BB35	74ES35BFAF		74ES35DFAF		74ES350FAF		74ES35EFAF			
340	—	—	250	300	—	3RW4076-6BB35	74FS35BFAF		74FS35DFAF		74FS350FAF		74FS35EFAF			

① Starter size is dependent on the nameplate Full Load Amps (FLA) rating of the motor. HPs are for reference only. Enclosed ratings are at 40°C.

② Starter selection is dependent on type of application. Im = FLA rating of motor.

3RW44 Enclosed features:
- Available in NEMA 1, 12, 3R, 4, and 4 stainless steel
- Compact size
- Built-in bypass contactor
- Multiple starting/stopping techniques including torque control
- Internal overload class 5, 10, 15, 20, or 30
- Built-in graphical LCD keypad
- Internal self protection
- Fault monitoring
- 3 parameter sets
- Communication capable via opt. Profibus module
- Programmable inputs and outputs
- External keypad available

Ordering Information

- ► Enclosed devices should be ordered by the FLA of the motor.
- ► The 3RW44 is designed for normal starting applications.
- ► For factory modifications see page 17-237.
- ► For complete derating and application info see page 17-264.
- ► For dimensional drawings see page 17-289.

Class 73 non-combination starters include:
- NEMA rated enclosure
- 3RW44 Sirius softstarter with built-in OL and bypass
- Control circuit transformer
- Reset button

Ideal applications for 3RW44 enclosed softstarters:
- Fans
- Pumps
- Conveying systems and lifts
- Hydraulics
- Machine tools
- Mills saws
- Crushers and grinders
- Mixers
- HVAC systems

The 3RW44 severe duty rating table should be applied for high inertia applications such rock crushers, chippers, screw compressors, ect.

Class 73 starters are built to UL and CSA standards.

3RW44 For High Feature Applications

Enclosed Non-Combination (Starter Only)

Rated Operating Current	MAX HP①				KW	Class 10 Light Duty (350% * Im for 10s)②											
	200V	230V	460V	575V	380V	OPEN Style (Starter Only)	NEMA 1	List Price $	NEMA 3R	List Price $	NEMA 12	List Price $	NEMA 4	List Price $	NEMA 4/4X Stainless Steel	List Price $
26	7.5	7.5	15	—	12	3RW4422-1BC34	73AT3_BFA		73AT3_DFA		73AT3_0FA		73AT3_EFA		73AT3_WFA	
32	10	10	20	—	15	3RW4423-1BC34	73BT3_BFA		73BT3_DFA		73BT3_0FA		73BT3_EFA		73BT3_WFA	
42	10	15	25	—	19	3RW4424-1BC34	73CT3_BFA		73CT3_DFA		73CT3_0FA		73CT3_EFA		73CT3_WFA	
51	15	15	30	—	22	3RW4425-1BC34	73DT3_BFA		73DT3_DFA		73DT3_0FA		73DT3_EFA		73DT3_WFA	
68	20	25	50	—	37	3RW4426-1BC34	73ET3_BFA		73ET3_DFA		73ET3_0FA		73ET3_EFA		73ET3_WFA	
82	25	30	60	—	45	3RW4427-1BC34	73FT3_BFA		73FT3_DFA		73FT3_0FA		73FT3_EFA		73FT3_WFA	
100	30	30	75	—	56	3RW4434-6BC34	73GT3_BFA		73GT3_DFA		73GT3_0FA		73GT3_EFA		73GT3_WFA	
117	30	40	75	—	56	3RW4435-6BC34	73HT3_BFA		73HT3_DFA		73HT3_0FA		73HT3_EFA		73HT3_WFA	
145	40	50	100	—	75	3RW4436-6BC34	73JT3_BFA		73JT3_DFA		73JT3_0FA		73JT3_EFA		73JT3_WFA	
180	60	60	125	—	93	3RW4443-6BC34	73KT3_BFA		73KT3_DFA		73KT3_0FA		73KT3_EFA		73KT3_WFA	
215	60	75	150	—	112	3RW4444-6BC34	73LT3_BFA		73LT3_DFA		73LT3_0FA		73LT3_EFA		73LT3_WFA	
280	75	100	200	—	149	3RW4445-6BC34	73MT3_BFA		73MT3_DFA		73MT3_0FA		73MT3_EFA		73MT3_WFA	
315	100	125	250	—	186	3RW4446-6BC34	73NT3_BFA		73NT3_DFA		73NT3_0FA		73NT3_EFA		73NT3_WFA	
385	125	150	300	—	224	3RW4447-6BC34	73PT3_BFA		73PT3_DFA		73PT3_0FA		73PT3_EFA		73PT3_WFA	
494	150	200	400	—	298	3RW4453-6BC34	73QT3_BFA		73QT3_DFA		73QT3_0FA		73QT3_EFA			
551	150	200	450	—	336	3RW4454-6BC34	73RT3_BFA		73RT3_DFA		73RT3_0FA		73RT3_EFA			
615	200	250	500	—	373	3RW4455-6BC34	73ST3_BFA		73ST3_DFA		73ST3_0FA		73ST3_EFA			
693	200	250	550	—	410	3RW4456-6BC34	73TT3_BFA		73TT3_DFA		73TT3_0FA		73TT3_EFA			
780	200	250	600	—	447	3RW4457-6BC34	73WT3_BFA		73WT3_DFA		73WT3_0FA					
970	350	350	800	—	597	3RW4465-6BC34	73YT3_BFA				73YT3_0FA					
1076	350	400	900	—	972	3RW4466-6BC34	73ZT3_BFA				73ZT3_0FA					
						200V	6		6		6		6		6	
						230V	2		2		2		2		2	
						380V	3		3		3		3		3	
						460V	4		4		4		4		4	
26	—	—	15	20	—	3RW4422-1BC35	73AT35BFA		73AT35DFA		73AT350FA		73AT35EFA		73AT35WFA	
32	—	—	20	25	—	3RW4423-1BC35	73BT35BFA		73BT35DFA		73BT350FA		73BT35EFA		73BT35WFA	
42	—	—	25	30	—	3RW4424-1BC35	73CT35BFA		73CT35DFA		73CT350FA		73CT35EFA		73CT35WFA	
51	—	—	30	40	—	3RW4425-1BC35	73DT35BFA		73DT35DFA		73DT350FA		73DT35EFA		73DT35WFA	
68	—	—	50	50	—	3RW4426-1BC35	73ET35BFA		73ET35DFA		73ET350FA		73ET35EFA		73ET35WFA	
82	—	—	60	75	—	3RW4427-1BC35	73FT35BFA		73FT35DFA		73FT350FA		73FT35EFA		73FT35WFA	
100	—	—	75	75	—	3RW4434-6BC35	73GT35BFA		73GT35DFA		73GT350FA		73GT35EFA		73GT35WFA	
117	—	—	75	100	—	3RW4435-6BC35	73HT35BFA		73HT35DFA		73HT350FA		73HT35EFA		73HT35WFA	
145	—	—	100	125	—	3RW4436-6BC35	73JT35BFA		73JT35DFA		73JT350FA		73JT35EFA		73JT35WFA	
180	—	—	125	150	—	3RW4443-6BC35	73KT35BFA		73KT35DFA		73KT350FA		73KT35EFA		73KT35WFA	
215	—	—	150	200	—	3RW4444-6BC35	73LT35BFA		73LT35DFA		73LT350FA		73LT35EFA		73LT35WFA	
280	—	—	200	250	—	3RW4445-6BC35	73MT35BFA		73MT35DFA		73MT350FA		73MT35EFA		73MT35WFA	
315	—	—	250	300	—	3RW4446-6BC35	73NT35BFA		73NT35DFA		73NT350FA		73NT35EFA		73NT35WFA	
385	—	—	300	400	—	3RW4447-6BC35	73PT35BFA		73PT35DFA		73PT350FA		73PT35EFA		73PT35WFA	
494	—	—	400	500	—	3RW4453-6BC35	73QT35BFA		73QT35DFA		73QT350FA		73QT35EFA			
551	—	—	450	600	—	3RW4454-6BC35	73RT35BFA		73RT35DFA		73RT350FA		73RT35EFA			
615	—	—	500	700	—	3RW4455-6BC35	73ST35BFA		73ST35DFA		73ST350FA		73ST35EFA			
693	—	—	550	750	—	3RW4456-6BC35	73TT35BFA		73TT35DFA		73TT350FA		73TT35EFA			
780	—	—	600	850	—	3RW4457-6BC35	73WT35BFA		73WT35DFA		73WT350FA		73WT35EFA			
970	—	—	800	1000	—	3RW4465-6BC35	73YT35BFA				73YT350FA					
1076	—	—	900	1100	—	3RW4466-6BC35	73ZT35BFA				73ZT350FA					

① Starter size is dependent on the nameplate Full Load Amps (FLA) rating of the motor. HPs are for reference only. Enclosed ratings are at 40°C.

② Starter selection is dependent on type of application. Im = FLA rating of motor.

3RW44 Enclosed features:
- Available in NEMA 1, 12, 3R, 4, and 4 stainless steel
- Compact size
- Built-in bypass contactor
- Multiple starting/stopping techniques including torque control
- Internal overload class 10, 15, or 20
- Built-in graphical LCD keypad
- Internal self protection
- Fault monitoring
- 3 parameter sets
- Communication capable via opt. Profibus module
- Programmable inputs and outputs
- External keypad available

Ordering Information

- ► Enclosed devices should be ordered by the FLA of the motor.
- ► The 3RW44 is designed for normal starting applications.
- ► For factory modifications see page 17-237.
- ► For complete derating and application info see page 17-264.
- ► For dimensional drawings see page 17-289.

Class 73 non-combination starters include:
- NEMA rated enclosure
- 3RW44 Sirius softstarter with built-in OL and bypass
- Control circuit transformer
- Line side power terminal block
- Reset button

Ideal applications for 3RW44 enclosed softstarters:
- Fans
- Pumps
- Conveying systems and lifts
- Hydraulics
- Machine tools
- Mills saws
- Crushers and grinders
- Mixers
- HVAC systems

The 3RW44 severe duty rating table should be applied for high inertia applications such rock crushers, chippers, screw compressors, ect.

Class 73 starters are built to UL and CSA standards.

3RW44 For High Feature Applications

Enclosed Non-Combination (Starter Only)

Rated Operating Current	MAX HP①				KW	Class 20 Severe Duty (350% * Im for 20s)②										
	200V	230V	460V	575V	380V	OPEN Style (Starter Only)	NEMA 1	List Price $	NEMA 3R	List Price $	NEMA 12	List Price $	NEMA 4	List Price $	NEMA 4/4X Stainless Steel	List Price $
26	7.5	7.5	15	—	12	3RW4422-1BC34	73AT3_BFA		73AT3_DFA		73AT3_0FA		73AT3_EFA		73AT3_WFA	
32	10	10	20	—	15	3RW4423-1BC34	73BT3_BFA		73BT3_DFA		73BT3_0FA		73BT3_EFA		73BT3_WFA	
42	10	15	25	—	19	3RW4424-1BC34	73CT3_BFA		73CT3_DFA		73CT3_0FA		73CT3_EFA		73CT3_WFA	
51	15	15	30	—	22	3RW4425-1BC34	73DT3_BFA		73DT3_DFA		73DT3_0FA		73DT3_EFA		73DT3_WFA	
68	20	25	50	—	37	3RW4426-1BC34	73ET3_BFA		73ET3_DFA		73ET3_0FA		73ET3_EFA		73ET3_WFA	
82	25	30	60	—	45	3RW4427-1BC34	73FT3_BFA		73FT3_DFA		73FT3_0FA		73FT3_EFA		73FT3_WFA	
97	30	30	60	—	45	3RW4434-6BC34	73GT3_BFA		73GT3_DFA		73GT3_0FA		73GT3_EFA		73GT3_WFA	
113	30	40	75	—	56	3RW4435-6BC34	73HT3_BFA		73HT3_DFA		73HT3_0FA		73HT3_EFA		73HT3_WFA	
134	40	50	75	—	56	3RW4436-6BC34	73JT3_BFA		73JT3_DFA		73JT3_0FA		73JT3_EFA		73JT3_WFA	
175	50	60	100	—	75	3RW4443-6BC34	73KT3_BFA		73KT3_DFA		73KT3_0FA		73KT3_EFA		73KT3_WFA	
195	60	75	125	—	93	3RW4444-6BC34	73LT3_BFA		73LT3_DFA		73LT3_0FA		73LT3_EFA		73LT3_WFA	
243	75	75	150	—	112	3RW4445-6BC34	73MT3_BFA		73MT3_DFA		73MT3_0FA		73MT3_EFA		73MT3_WFA	
263	75	100	200	—	149	3RW4446-6BC34	73NT3_BFA		73NT3_DFA		73NT3_0FA		73NT3_EFA		73NT3_WFA	
326	100	125	250	—	186	3RW4447-6BC34	73PT3_BFA		73PT3_DFA		73PT3_0FA		73PT3_EFA		73PT3_WFA	
494	150	150	400	—	224	3RW4453-6BC34	73QT3_BFA		73QT3_DFA		73QT3_0FA		73QT3_EFA			
551	150	200	450	—	298	3RW4454-6BC34	73RT3_BFA		73RT3_DFA		73RT3_0FA		73RT3_EFA			
615	200	200	500	—	336	3RW4455-6BC34	73ST3_BFA		73ST3_DFA		73ST3_0FA		73ST3_EFA			
634	200	250	500	—	373	3RW4456-6BC34	73TT3_BFA		73TT3_DFA		73TT3_0FA		73TT3_EFA			
650	200	250	550	—	410	3RW4457-6BC34	73WT3_BFA		73WT3_DFA		73WT3_0FA		73WT3_EFA			
880	300	350	700	—	522	3RW4465-6BC34	73YT3_BFA				73YT3_0FA					
940	300	350	750	—	559	3RW4466-6BC34	73ZT3_BFA				73ZT3_0FA					
						200V	6		6		6		6		6	
						230V	2		2		2		2		2	
						380V	3		3		3		3		3	
						460V	4		4		4		4		4	
26	—	—	15	20	—	3RW4422-1BC35	73AT35BFA		73AT35DFA		73AT350FA		73AT35EFA		73AT35WFA	
32	—	—	20	25	—	3RW4423-1BC35	73BT35BFA		73BT35DFA		73BT350FA		73BT35EFA		73BT35WFA	
42	—	—	25	30	—	3RW4424-1BC35	73CT35BFA		73CT35DFA		73CT350FA		73CT35EFA		73CT35WFA	
51	—	—	30	40	—	3RW4425-1BC35	73DT35BFA		73DT35DFA		73DT350FA		73DT35EFA		73DT35WFA	
68	—	—	50	50	—	3RW4426-1BC35	73ET35BFA		73ET35DFA		73ET350FA		73ET35EFA		73ET35WFA	
82	—	—	60	75	—	3RW4427-1BC35	73FT35BFA		73FT35DFA		73FT350FA		73FT35EFA		73FT35WFA	
97	—	—	60	75	—	3RW4434-6BC35	73GT35BFA		73GT35DFA		73GT350FA		73GT35EFA		73GT35WFA	
113	—	—	75	100	—	3RW4435-6BC35	73HT35BFA		73HT35DFA		73HT350FA		73HT35EFA		73HT35WFA	
134	—	—	75	125	—	3RW4436-6BC35	73JT35BFA		73JT35DFA		73JT350FA		73JT35EFA		73JT35WFA	
175	—	—	100	150	—	3RW4443-6BC35	73KT35BFA		73KT35DFA		73KT350FA		73KT35EFA		73KT35WFA	
195	—	—	125	200	—	3RW4444-6BC35	73LT35BFA		73LT35DFA		73LT350FA		73LT35EFA		73LT35WFA	
243	—	—	150	200	—	3RW4445-6BC35	73MT35BFA		73MT35DFA		73MT350FA		73MT35EFA		73MT35WFA	
263	—	—	200	250	—	3RW4446-6BC35	73NT35BFA		73NT35DFA		73NT350FA		73NT35EFA		73NT35WFA	
326	—	—	250	300	—	3RW4447-6BC35	73PT35BFA		73PT35DFA		73PT350FA		73PT35EFA		73PT35WFA	
494	—	—	400	500	—	3RW4453-6BC35	73QT35BFA		73QT35DFA		73QT350FA		73QT35EFA			
551	—	—	450	550	—	3RW4454-6BC35	73RT35BFA		73RT35DFA		73RT350FA		73RT35EFA			
615	—	—	500	600	—	3RW4455-6BC35	73ST35BFA		73ST35DFA		73ST350FA		73ST35EFA			
693	—	—	500	650	—	3RW4456-6BC35	73TT35BFA		73TT35DFA		73TT350FA		73TT35EFA			
780	—	—	550	700	—	3RW4457-6BC35	73WT35BFA		73WT35DFA		73WT350FA		73WT35EFA			
880	—	—	700	850	—	3RW4465-6BC35	73YT35BFA				73YT350FA					
940	—	—	750	900	—	3RW4466-6BC35	73ZT35BFA				73ZT350FA					

① Starter size is dependent on the nameplate Full Load Amps (FLA) rating of the motor. HPs are for reference only. Enclosed ratings are at 40°C.

② Starter selection is dependent on type of application. Im = FLA rating of motor.

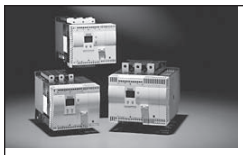

3RW44 Enclosed features:
- Available in NEMA 1, 12, 3R, 4, and 4 stainless steel
- Compact size
- Built-in bypass contactor
- Multiple starting/stopping techniques including torque control
- Internal overload class 5, 10, 15, 20, or 30
- Built-in graphical LCD keypad
- Internal self protection
- Fault monitoring
- 3 parameter sets
- Communication capable via opt. Profibus module
- Programmable inputs and outputs
- External keypad available

Ordering Information

- ► Enclosed devices should be ordered by the FLA of the motor.
- ► The 3RW44 is designed for normal starting applications.
- ► For factory modifications see page 17-237.
- ► For complete derating and application info see page 17-264.
- ► For dimensional drawings see page 17-289.
- ► For stocked versions see page 7/89.

Class 74 non-combination starters include:
- NEMA rated enclosure
- 3RW44 Sirius softstarter with built-in OL and bypass
- Circuit breaker with disconnect
- Control circuit transformer
- Reset button

Ideal applications for 3RW44 enclosed softstarters:
- Fans
- Pumps
- Conveying systems and lifts
- Hydraulics
- Machine tools
- Mills saws
- Crushers and grinders
- Mixers
- HVAC systems

The 3RW44 severe duty rating table should be applied for high inertia applications such rock crushers, chippers, screw compressors, ect.

Class 74 starters are built to UL and CSA standards.

3RW44 For High Feature Applications

Enclosed Combination with Circuit Breaker Disconnect

Rated Operating Current	MAX HP①				KW	Class 10 Light Duty (350% * Im for 10s)②											
	200V	230V	460V	575V	380V	OPEN Style (Starter Only)	NEMA 1	List Price $	NEMA 3R	List Price $	NEMA 12	List Price $	NEMA 4	List Price $	NEMA 4/4X Stainless Steel	List Price $
26	7.5	7.5	15	—	12	3RW4422-1BC34	74AT3_BFAP		74AT3_DFAP		74AT3_0FAP		74AT3_EFAP		74AT3_WFAP	
32	10	10	20	—	15	3RW4423-1BC34	74BT3_BFAP		74BT3_DFAP		74BT3_0FAP		74BT3_EFAP		74BT3_WFAP	
42	10	15	25	—	19	3RW4424-1BC34	74CT3_BFAP		74CT3_DFAP		74CT3_0FAP		74CT3_EFAP		74CT3_WFAP	
51	15	15	30	—	22	3RW4425-1BC34	74DT3_BFAP		74DT3_DFAP		74DT3_0FAP		74DT3_EFAP		74DT3_WFAP	
68	20	25	50	—	37	3RW4426-1BC34	74ET3_BFAP		74ET3_DFAP		74ET3_0FAP		74ET3_EFAP		74ET3_WFAP	
82	25	30	60	—	45	3RW4427-1BC34	74FT3_BFAP		74FT3_DFAP		74FT3_0FAP		74FT3_EFAP		74FT3_WFAP	
100	30	30	75	—	56	3RW4434-6BC34	74GT3_BFAP		74GT3_DFAP		74GT3_0FAP		74GT3_EFAP		74GT3_WFAP	
117	30	40	75	—	56	3RW4435-6BC34	74HT3_BFAP		74HT3_DFAP		74HT3_0FAP		74HT3_EFAP		74HT3_WFAP	
145	40	50	100	—	75	3RW4436-6BC34	74JT3_BFAP		74JT3_DFAP		74JT3_0FAP		74JT3_EFAP		74JT3_WFAP	
180	60	60	125	—	93	3RW4443-6BC34	74KT3_BFAP		74KT3_DFAP		74KT3_0FAP		74KT3_EFAP			
215	60	75	150	—	112	3RW4444-6BC34	74LT3_BFAP		74LT3_DFAP		74LT3_0FAP		74LT3_EFAP			
280	75	100	200	—	149	3RW4445-6BC34	74MT3_BFAP		74MT3_DFAP		74MT3_0FAP		74MT3_EFAP			
315	100	125	250	—	186	3RW4446-6BC34	74NT3_BFAP		74NT3_DFAP		74NT3_0FAP		74NT3_EFAP			
385	125	150	300	—	224	3RW4447-6BC34	74PT3_BFAP		74PT3_DFAP		74PT3_0FAP		74PT3_EFAP			
494	150	200	400	—	298	3RW4453-6BC34	74QT3_BFAT		74QT3_DFAT		74QT3_0FAT		74QT3_EFAT			
551	150	200	450	—	336	3RW4454-6BC34	74RT3_BFAT		74RT3_DFAT		74RT3_0FAT		74RT3_EFAT			
615	200	250	500	—	373	3RW4455-6BC34	74ST3_BFAT		74ST3_DFAT		74ST3_0FAT		74ST3_EFAT			
693	200	250	550	—	410	3RW4456-6BC34	74TT3_BFAT		74TT3_DFAT		74TT3_0FAT		74TT3_EFAT			
780	200	250	600	—	447	3RW4457-6BC34	74WT3_BFAT		74WT3_DFAT		74WT3_0FAT		74WT3_EFAT			
970	350	350	800	—	597	3RW4465-6BC34	74YT3_BFAT				74YT3_0FAT					
1076	350	400	900	—	672	3RW4466-6BC34	74ZT3_BFAT				74ZT3_0FAT					
						200V	6		6		6		6		6	
						230V	2		2		2		2		2	
						380V	3		3		3		3		3	
						460V	4		4		4		4		4	
26	—	—	15	20	—	3RW4422-1BC35	74AT35BFAP		74AT35DFAP		74AT350FAP		74AT35EFAP		74AT35WFAP	
32	—	—	20	25	—	3RW4423-1BC35	74BT35BFAP		74BT35DFAP		74BT350FAP		74BT35EFAP		74BT35WFAP	
42	—	—	25	30	—	3RW4424-1BC35	74CT35BFAP		74CT35DFAP		74CT350FAP		74CT35EFAP		74CT35WFAP	
51	—	—	30	40	—	3RW4425-1BC35	74DT35BFAP		74DT35DFAP		74DT350FAP		74DT35EFAP		74DT35WFAP	
68	—	—	50	50	—	3RW4426-1BC35	74ET35BFAP		74ET35DFAP		74ET350FAP		74ET35EFAP		74ET35WFAP	
82	—	—	60	75	—	3RW4427-1BC35	74FT35BFAP		74FT35DFAP		74FT350FAP		74FT35EFAP		74FT35WFAP	
100	—	—	75	75	—	3RW4434-6BC35	74GT35BFAP		74GT35DFAP		74GT350FAP		74GT35EFAP		74GT35WFAP	
117	—	—	75	100	—	3RW4435-6BC35	74HT35BFAP		74HT35DFAP		74HT350FAP		74HT35EFAP		74HT35WFAP	
145	—	—	100	125	—	3RW4436-6BC35	74JT35BFAP		74JT35DFAP		74JT350FAP		74JT35EFAP		74JT35WFAP	
180	—	—	125	150	—	3RW4443-6BC35	74KT35BFAP		74KT35DFAP		74KT350FAP		74KT35EFAP			
215	—	—	150	200	—	3RW4444-6BC35	74LT35BFAP		74LT35DFAP		74LT350FAP		74LT35EFAP			
280	—	—	200	250	—	3RW4445-6BC35	74MT35BFAP		74MT35DFAP		74MT350FAP		74MT35EFAP			
315	—	—	250	300	—	3RW4446-6BC35	74NT35BFAP		74NT35DFAP		74NT350FAP		74NT35EFAP			
385	—	—	300	400	—	3RW4447-6BC35	74PT35BFAP		74PT35DFAP		74PT350FAP		74PT35EFAP			
494	—	—	400	500	—	3RW4453-6BC35	74QT35BFAT		74QT35DFAT		74QT350FAT		74QT35EFAT			
551	—	—	450	600	—	3RW4454-6BC35	74RT35BFAT		74RT35DFAT		74RT350FAT		74RT35EFAT			
615	—	—	500	700	—	3RW4455-6BC35	74ST35BFAT		74ST35DFAT		74ST350FAT		74ST35EFAT			
693	—	—	550	750	—	3RW4456-6BC35	74TT35BFAT		74TT35DFAT		74TT350FAT		74TT35EFAT			
780	—	—	600	850	—	3RW4457-6BC35	74WT35BFAT		74WT35DFAT		74WT350FAT		74WT35EFAT			
970	—	—	800	1000	—	3RW4465-6BC35	74YT35BFAT				74YT350FAT					
1076	—	—	900	1100	—	3RW4466-6BC35	74ZT35BFAT				74ZT350FAT					

① Starter size is dependent on the nameplate Full Load Amps (FLA) rating of the motor. HPs are for reference only. Enclosed ratings are at 40°C.

② Starter selection is dependent on type of application. Im = FLA rating of motor.

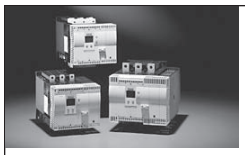

3RW44 Enclosed features:
- Available in NEMA 1, 12, 3R, 4, and 4 stainless steel
- Compact size
- Built-in bypass contactor
- Multiple starting/stopping techniques including torque control
- Internal overload class 5, 10, 15, 20, or 30
- Built-in graphical LCD keypad
- Internal self protection
- Fault monitoring
- 3 parameter sets
- Communication capable via opt. Profibus module
- Programmable inputs and outputs
- External keypad available

Ordering Information

- ► Enclosed devices should be ordered by the FLA of the motor.
- ► The 3RW44 is designed for normal starting applications.
- ► For factory modifications see page 17-237.
- ► For complete derating and application info see page 17-264.
- ► For dimensional drawings see page 17-289.
- ► For stocked versions see page 7/89.

Class 74 non-combination starters include:
- NEMA rated enclosure
- 3RW44 Sirius softstarter with built-in OL and bypass
- Circuit breaker with disconnect
- Control circuit transformer
- Reset button

Ideal applications for 3RW44 enclosed softstarters:
- Fans
- Pumps
- Conveying systems and lifts
- Hydraulics
- Machine tools
- Mills saws
- Crushers and grinders
- Mixers
- HVAC systems

The 3RW44 severe duty rating table should be applied for high inertia applications such rock crushers, chippers, screw compressors, ect.

Class 74 starters are built to UL and CSA standards.

3RW44 For High Feature Applications

Enclosed Combination with Circuit Breaker Disconnect

Rated Operating Current	MAX HP①				KW	Class 20 Severe Duty (350% * Im for 20s)②											
	200V	230V	460V	575V	380V	OPEN Style (Starter Only)	NEMA 1	List Price $	NEMA 3R	List Price $	NEMA 12	List Price $	NEMA 4	List Price $	NEMA 4/4X Stainless Steel	List Price $
26	7.5	7.5	15	—	12	3RW4422-1BC34	74AT3_BFAP		74AT3_DFAP		74AT3_0FAP		74AT3_EFAP		74AT3_WFAP	
32	10	10	20	—	15	3RW4423-1BC34	74BT3_BFAP		74BT3_DFAP		74BT3_0FAP		74BT3_EFAP		74BT3_WFAP	
42	10	15	25	—	19	3RW4424-1BC34	74CT3_BFAP		74CT3_DFAP		74CT3_0FAP		74CT3_EFAP		74CT3_WFAP	
51	15	15	30	—	22	3RW4425-1BC34	74DT3_BFAP		74DT3_DFAP		74DT3_0FAP		74DT3_EFAP		74DT3_WFAP	
68	20	25	50	—	37	3RW4426-1BC34	74ET3_BFAP		74ET3_DFAP		74ET3_0FAP		74ET3_EFAP		74ET3_WFAP	
82	25	30	60	—	45	3RW4427-1BC34	74FT3_BFAP		74FT3_DFAP		74FT3_0FAP		74FT3_EFAP		74FT3_WFAP	
97	30	30	60	—	45	3RW4434-6BC34	74GT3_BFAP		74GT3_DFAP		74GT3_0FAP		74GT3_EFAP		74GT3_WFAP	
113	30	40	75	—	56	3RW4435-6BC34	74HT3_BFAP		74HT3_DFAP		74HT3_0FAP		74HT3_EFAP		74HT3_WFAP	
134	40	50	75	—	56	3RW4436-6BC34	74JT3_BFAP		74JT3_DFAP		74JT3_0FAP		74JT3_EFAP		74JT3_WFAP	
175	50	60	100	—	75	3RW4443-6BC34	74KT3_BFAP		74KT3_DFAP		74KT3_0FAP		74KT3_EFAP			
195	60	75	125	—	93	3RW4444-6BC34	74LT3_BFAP		74LT3_DFAP		74LT3_0FAP		74LT3_EFAP			
243	75	75	150	—	112	3RW4445-6BC34	74MT3_BFAP		74MT3_DFAP		74MT3_0FAP		74MT3_EFAP			
263	75	100	200	—	149	3RW4446-6BC34	74NT3_BFAP		74NT3_DFAP		74NT3_0FAP		74NT3_EFAP			
326	100	125	250	—	186	3RW4447-6BC34	74PT3_BFAP		74PT3_DFAP		74PT3_0FAP		74PT3_EFAP			
494	150	150	400	—	224	3RW4453-6BC34	74QT3_BFAT		74QT3_DFAT		74QT3_0FAT		74QT3_EFAT			
551	150	200	450	—	298	3RW4454-6BC34	74RT3_BFAT		74RT3_DFAT		74RT3_0FAT		74RT3_EFAT			
615	200	200	500	—	336	3RW4455-6BC34	74ST3_BFAT		74ST3_DFAT		74ST3_0FAT		74ST3_EFAT			
634	200	250	500	—	373	3RW4456-6BC34	74TT3_BFAT		74TT3_DFAT		74TT3_0FAT		74TT3_EFAT			
650	200	250	550	—	410	3RW4457-6BC34	74WT3_BFAT		74WT3_DFAT		74WT3_0FAT		74WT3_EFAT			
880	300	350	700	—	522	3RW4465-6BC34	74YT3_BFAT				74YT3_0FAT					
940	300	350	750	—	559	3RW4466-6BC34	74ZT3_BFAT				74ZT3_0FAT					
						200V	6		6		6		6		6	
						230V	2		2		2		2		2	
						380V	3		3		3		3		3	
						460V	4		4		4		4		4	
26	—	—	15	20	—	3RW4422-1BC35	74AT35BFAP		74AT35DFAP		74AT350FAP		74AT35EFAP		74AT35WFAP	
32	—	—	20	25	—	3RW4423-1BC35	74BT35BFAP		74BT35DFAP		74BT350FAP		74BT35EFAP		74BT35WFAP	
42	—	—	25	30	—	3RW4424-1BC35	74CT35BFAP		74CT35DFAP		74CT350FAP		74CT35EFAP		74CT35WFAP	
51	—	—	30	40	—	3RW4425-1BC35	74DT35BFAP		74DT35DFAP		74DT350FAP		74DT35EFAP		74DT35WFAP	
68	—	—	50	50	—	3RW4426-1BC35	74ET35BFAP		74ET35DFAP		74ET350FAP		74ET35EFAP		74ET35WFAP	
82	—	—	60	75	—	3RW4427-1BC35	74FT35BFAP		74FT35DFAP		74FT350FAP		74FT35EFAP		74FT35WFAP	
97	—	—	60	75	—	3RW4434-6BC35	74GT35BFAP		74GT35DFAP		74GT350FAP		74GT35EFAP		74GT35WFAP	
113	—	—	75	100	—	3RW4435-6BC35	74HT35BFAP		74HT35DFAP		74HT350FAP		74HT35EFAP		74HT35WFAP	
134	—	—	75	125	—	3RW4436-6BC35	74JT35BFAP		74JT35DFAP		74JT350FAP		74JT35EFAP		74JT35WFAP	
175	—	—	100	150	—	3RW4443-6BC35	74KT35BFAP		74KT35DFAP		74KT350FAP		74KT35EFAP			
195	—	—	125	200	—	3RW4444-6BC35	74LT35BFAP		74LT35DFAP		74LT350FAP		74LT35EFAP			
243	—	—	150	200	—	3RW4445-6BC35	74MT35BFAP		74MT35DFAP		74MT350FAP		74MT35EFAP			
263	—	—	200	250	—	3RW4446-6BC35	74NT35BFAP		74NT35DFAP		74NT350FAP		74NT35EFAP			
326	—	—	250	300	—	3RW4447-6BC35	74PT35BFAP		74PT35DFAP		74PT350FAP		74PT35EFAP			
494	—	—	400	500	—	3RW4453-6BC35	74QT35BFAT		74QT35DFAT		74QT350FAT		74QT35EFAT			
551	—	—	450	550	—	3RW4454-6BC35	74RT35BFAT		74RT35DFAT		74RT350FAT		74RT35EFAT			
615	—	—	500	600	—	3RW4455-6BC35	74ST35BFAT		74ST35DFAT		74ST350FAT		74ST35EFAT			
693	—	—	500	650	—	3RW4456-6BC35	74TT35BFAT		74TT35DFAT		74TT350FAT		74TT35EFAT			
780	—	—	550	700	—	3RW4457-6BC35	74WT35BFAT		74WT35DFAT		74WT350FAT		74WT35EFAT			
880	—	—	700	850	—	3RW4465-6BC35	74YT35BFAT				74YT350FAT					
940	—	—	750	900	—	3RW4466-6BC35	74ZT35BFAT				74ZT350FAT					

① Starter size is dependent on the nameplate Full Load Amps (FLA) rating of the motor.
HPs are for reference only. Enclosed ratings are at 40°C.
② Starter selection is dependent on type of application. Im = FLA rating of motor.

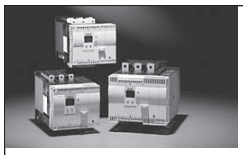

3RW44 Enclosed features:
- Available in NEMA 1, 12, 3R, 4, and 4 stainless steel
- Compact size
- Built-in bypass contactor
- Multiple starting/stopping techniques including torque control
- Internal overload class 5, 10, 15, 20, or 30
- Built-in graphical LCD keypad
- Internal self protection
- Fault monitoring
- 3 parameter sets
- Communication capable via opt. Profibus module
- Programmable inputs and outputs
- External keypad available

Ordering Information

- ► Enclosed devices should be ordered by the FLA of the motor.
- ► The 3RW44 is designed for normal starting applications.
- ► For factory modifications see page 17-237.
- ► For complete derating and application info see page 17-264.
- ► For dimensional drawings see page 17-289.

Class 74 non-combination starters include:
- NEMA rated enclosure
- 3RW44 Sirius softstarter with built-in OL and bypass
- Fusible disconnect
- Control circuit transformer
- Reset button

Ideal applications for 3RW44 enclosed softstarters:
- Fans
- Pumps
- Conveying systems and lifts
- Hydraulics
- Machine tools
- Mills saws
- Crushers and grinders
- Mixers
- HVAC systems

The 3RW44 severe duty rating table should be applied for high inertia applications such rock crushers, chippers, screw compressors, ect.

Class 74 starters are built to UL and CSA standards.

For all technical information, please consult the 2006 Industrial Controls Catalog or contact your local sales support center.

3RW44 For High Feature Applications

Enclosed Combination with Fusible Disconnect

Rated Operating Current	MAX HP①				KW	Class 10 Light Duty② (350% * Im for 10s)											
	200V	230V	460V	575V	380V	OPEN Style (Starter Only)	NEMA 1	List Price $	NEMA 3R	List Price $	NEMA 12	List Price $	NEMA 4	List Price $	NEMA 4/4X Stainless Steel	List Price $
26	7.5	7.5	15	—	12	3RW4422-1BC34	74AT3_BFAF		74AT3_DFAF		74AT3_0FAF		74AT3_EFAF		74AT3_WFAF	
32	10	10	20	—	15	3RW4423-1BC34	74BT3_BFAF		74BT3_DFAF		74BT3_0FAF		74BT3_EFAF		74BT3_WFAF	
42	10	15	25	—	19	3RW4424-1BC34	74CT3_BFAF		74CT3_DFAF		74CT3_0FAF		74CT3_EFAF		74CT3_WFAF	
51	15	15	30	—	22	3RW4425-1BC34	74DT3_BFAF		74DT3_DFAF		74DT3_0FAF		74DT3_EFAF		74DT3_WFAF	
68	20	25	50	—	37	3RW4426-1BC34	74ET3_BFAF		74ET3_DFAF		74ET3_0FAF		74ET3_EFAF		74ET3_WFAF	
82	25	30	60	—	45	3RW4427-1BC34	74FT3_BFAF		74FT3_DFAF		74FT3_0FAF		74FT3_EFAF		74FT3_WFAF	
100	30	30	75	—	56	3RW4434-6BC34	74GT3_BFAF		74GT3_DFAF		74GT3_0FAF		74GT3_EFAF		74GT3_WFAF	
117	30	40	75	—	56	3RW4435-6BC34	74HT3_BFAF		74HT3_DFAF		74HT3_0FAF		74HT3_EFAF		74HT3_WFAF	
145	40	50	100	—	75	3RW4436-6BC34	74JT3_BFAF		74JT3_DFAF		74JT3_0FAF		74JT3_EFAF		74JT3_WFAF	
180	60	60	125	—	93	3RW4443-6BC34	74KT3_BFAF		74KT3_DFAF		74KT3_0FAF		74KT3_EFAF			
215	60	75	150	—	112	3RW4444-6BC34	74LT3_BFAF		74LT3_DFAF		74LT3_0FAF		74LT3_EFAF			
280	75	100	200	—	149	3RW4445-6BC34	74MT3_BFAF		74MT3_DFAF		74MT3_0FAF		74MT3_EFAF			
315	100	125	250	—	186	3RW4446-6BC34	74NT3_BFAF		74NT3_DFAF		74NT3_0FAF		74NT3_EFAF			
385	125	150	300	—	224	3RW4447-6BC34	74PT3_BFAF		74PT3_DFAF		74PT3_0FAF		74PT3_EFAF			
494	150	200	400	—	298	3RW4453-6BC34	74QT3_BFAF				74QT3_0FAF					
551	150	200	450	—	336	3RW4454-6BC34	74RT3_BFAF				74RT3_0FAF					
615	200	250	500	—	373	3RW4455-6BC34	74ST3_BFAF				74ST3_0FAF					
693	200	250	550	—		3RW4456-6BC34	74TT3_BFAF				74TT3_0FAF					
780	200	250	600	—	447	3RW4457-6BC34	74WT3_BFAF				74WT3_0FAF					
						200V	6		6		6		6		6	
						230V	2		2		2		2		2	
						380V	3		3		3		3		3	
						460V	4		4		4		4		4	
26	—	—	15	20	—	3RW4422-1BC35	74AT35BFAF		74AT35DFAF		74AT350FAF		74AT35EFAF		74AT35WFAF	
32	—	—	20	25	—	3RW4423-1BC35	74BT35BFAF		74BT35DFAF		74BT350FAF		74BT35EFAF		74BT35WFAF	
42	—	—	25	30	—	3RW4424-1BC35	74CT35BFAF		74CT35DFAF		74CT350FAF		74CT35EFAF		74CT35WFAF	
51	—	—	30	40	—	3RW4425-1BC35	74DT35BFAF		74DT35DFAF		74DT350FAF		74DT35EFAF		74DT35WFAF	
68	—	—	50	50	—	3RW4426-1BC35	74ET35BFAF		74ET35DFAF		74ET350FAF		74ET35EFAF		74ET35WFAF	
82	—	—	60	75	—	3RW4427-1BC35	74FT35BFAF		74FT35DFAF		74FT350FAF		74FT35EFAF		74FT35WFAF	
100	—	—	75	75	—	3RW4434-6BC35	74GT35BFAF		74GT35DFAF		74GT350FAF		74GT35EFAF		74GT35WFAF	
117	—	—	75	100	—	3RW4435-6BC35	74HT35BFAF		74HT35DFAF		74HT350FAF		74HT35EFAF		74HT35WFAF	
145	—	—	100	125	—	3RW4436-6BC35	74JT35BFAF		74JT35DFAF		74JT350FAF		74JT35EFAF		74JT35WFAF	
180	—	—	125	150	—	3RW4443-6BC35	74KT35BFAF		74KT35DFAF		74KT350FAF		74KT35EFAF			
215	—	—	150	200	—	3RW4444-6BC35	74LT35BFAF		74LT35DFAF		74LT350FAF		74LT35EFAF			
280	—	—	200	250	—	3RW4445-6BC35	74MT35BFAF		74MT35DFAF		74MT350FAF		74MT35EFAF			
315	—	—	250	300	—	3RW4446-6BC35	74NT35BFAF		74NT35DFAF		74NT350FAF		74NT35EFAF			
385	—	—	300	400	—	3RW4447-6BC35	74PT35BFAF		74PT35DFAF		74PT350FAF		74PT35EFAF			
494	—	—	400	500	—	3RW4453-6BC35	74QT35BFAF				74QT350FAF					
551	—	—	450	600	—	3RW4454-6BC35	74RT35BFAF				74RT350FAF					
615	—	—	500	700	—	3RW4455-6BC35	74ST35BFAF				74ST350FAF					
693	—	—	550	750	—	3RW4456-6BC35	74TT35BFAF				74TT350FAF					
780	—	—	600	850	—	3RW4457-6BC35	74WT35BFAF				74WT350FAF					

① Starter size is dependent on the nameplate Full Load Amps (FLA) rating of the motor. HPs are for reference only. Enclosed ratings are at 40°C.

② Starter selection is dependent on type of application. Im = FLA rating of motor.

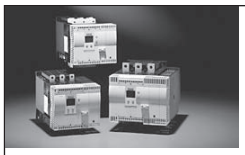

3RW44 Enclosed features:
- Available in NEMA 1, 12, 3R, 4, and 4 stainless steel
- Compact size
- Built-in bypass contactor
- Multiple starting/stopping techniques including torque control
- Internal overload class 5, 10, 15, 20, or 30
- Built-in graphical LCD keypad
- Internal self protection
- Fault monitoring
- 3 parameter sets
- Communication capable via opt. Profibus module
- Programmable inputs and outputs
- External keypad available

Ordering Information

- ► Enclosed devices should be ordered by the FLA of the motor.
- ► The 3RW44 is designed for normal starting applications.
- ► For factory modifications see page 17-237.
- ► For complete derating and application info see page 17-264.
- ► For dimensional drawings see page 17-289.

Class 74 non-combination starters include:
- NEMA rated enclosure
- 3RW44 Sirius softstarter with built-in OL and bypass
- Fusible disconnect
- Control circuit transformer
- Reset button

Ideal applications for 3RW44 enclosed softstarters:
- Fans
- Pumps
- Conveying systems and lifts
- Hydraulics
- Machine tools
- Mills saws
- Crushers and grinders
- Mixers
- HVAC systems

The 3RW44 severe duty rating table should be applied for high inertia applications such rock crushers, chippers, screw compressors, ect.

Class 74 starters are built to UL and CSA standards.

For all technical information, please consult the 2006 Industrial Controls Catalog or contact your local sales support center.

3RW44 For High Feature Applications

Enclosed Combination with Fusible Disconnect

Rated Operating Current	MAX HP①				KW	Class 20 Severe Duty (350% * Im for 20s)②											
	200V	230V	460V	575V	380V	OPEN Style (Starter Only)	NEMA 1	List Price $	NEMA 3R	List Price $	NEMA 12	List Price $	NEMA 4	List Price $	NEMA 4/4X Stainless Steel	List Price $
26	7.5	7.5	15	—	12	3RW4422-1BC34	74AT3_BFAF		74AT3_DFAF		74AT3_0FAF		74AT3_EFAF		74AT3_WFAF	
32	10	10	20	—	15	3RW4423-1BC34	74BT3_BFAF		74BT3_DFAF		74BT3_0FAF		74BT3_EFAF		74BT3_WFAF	
42	10	15	25	—	19	3RW4424-1BC34	74CT3_BFAF		74CT3_DFAF		74CT3_0FAF		74CT3_EFAF		74CT3_WFAF	
51	15	15	30	—	22	3RW4425-1BC34	74DT3_BFAF		74DT3_DFAF		74DT3_0FAF		74DT3_EFAF		74DT3_WFAF	
68	20	25	50	—	37	3RW4426-1BC34	74ET3_BFAF		74ET3_DFAF		74ET3_0FAF		74ET3_EFAF		74ET3_WFAF	
82	25	30	60	—	45	3RW4427-1BC34	74FT3_BFAF		74FT3_DFAF		74FT3_0FAF		74FT3_EFAF		74FT3_WFAF	
97	30	30	60	—	45	3RW4434-6BC34	74GT3_BFAF		74GT3_DFAF		74GT3_0FAF		74GT3_EFAF		74GT3_WFAF	
113	30	40	75	—	56	3RW4435-6BC34	74HT3_BFAF		74HT3_DFAF		74HT3_0FAF		74HT3_EFAF		74HT3_WFAF	
134	40	50	75	—	56	3RW4436-6BC34	74JT3_BFAF		74JT3_DFAF		74JT3_0FAF		74JT3_EFAF		74JT3_WFAF	
175	50	60	100	—	75	3RW4443-6BC34	74KT3_BFAF		74KT3_DFAF		74KT3_0FAF		74KT3_EFAF			
195	60	75	125	—	93	3RW4444-6BC34	74LT3_BFAF		74LT3_DFAF		74LT3_0FAF		74LT3_EFAF			
243	75	75	150	—	112	3RW4445-6BC34	74MT3_BFAF		74MT3_DFAF		74MT3_0FAF		74MT3_EFAF			
263	75	100	200	—	149	3RW4446-6BC34	74NT3_BFAF		74NT3_DFAF		74NT3_0FAF		74NT3_EFAF			
326	100	125	250	—	186	3RW4447-6BC34	74PT3_BFAF		74PT3_DFAF		74PT3_0FAF		74PT3_EFAF			
494	150	150	400	—	298	3RW4453-6BC34	74QT3_BFAF				74QT3_0FAF					
551	150	200	450	—	336	3RW4454-6BC34	74RT3_BFAF				74RT3_0FAF					
615	200	200	500	—	373	3RW4455-6BC34	74ST3_BFAF				74ST3_0FAF					
634	200	250	500	—	373	3RW4456-6BC34	74TT3_BFAF				74TT3_0FAF					
650	200	250	550	—	373	3RW4457-6BC34	74WT3_BFAF				74WT3_0FAF					
						200V	6		6		6		6		6	
						230V	2		2		2		2		2	
						380V	3		3		3		3		3	
						460V	4		4		4		4		4	
26	—	—	15	20	—	3RW4422-1BC35	74AT35BFAF		74AT35DFAF		74AT350FAF		74AT35EFAF		74AT35WFAF	
32	—	—	20	25	—	3RW4423-1BC35	74BT35BFAF		74BT35DFAF		74BT350FAF		74BT35EFAF		74BT35WFAF	
42	—	—	25	30	—	3RW4424-1BC35	74CT35BFAF		74CT35DFAF		74CT350FAF		74CT35EFAF		74CT35WFAF	
51	—	—	30	40	—	3RW4425-1BC35	74DT35BFAF		74DT35DFAF		74DT350FAF		74DT35EFAF		74DT35WFAF	
68	—	—	50	50	—	3RW4426-1BC35	74ET35BFAF		74ET35DFAF		74ET350FAF		74ET35EFAF		74ET35WFAF	
82	—	—	60	75	—	3RW4427-1BC35	74FT35BFAF		74FT35DFAF		74FT350FAF		74FT35EFAF		74FT35WFAF	
97	—	—	60	75	—	3RW4434-6BC35	74GT35BFAF		74GT35DFAF		74GT350FAF		74GT35EFAF		74GT35WFAF	
113	—	—	75	100	—	3RW4435-6BC35	74HT35BFAF		74HT35DFAF		74HT350FAF		74HT35EFAF		74HT35WFAF	
134	—	—	75	125	—	3RW4436-6BC35	74JT35BFAF		74JT35DFAF		74JT350FAF		74JT35EFAF		74JT35WFAF	
175	—	—	100	150	—	3RW4443-6BC35	74KT35BFAF		74KT35DFAF		74KT350FAF		74KT35EFAF			
195	—	—	125	200	—	3RW4444-6BC35	74LT35BFAF		74LT35DFAF		74LT350FAF		74LT35EFAF			
243	—	—	150	200	—	3RW4445-6BC35	74MT35BFAF		74MT35DFAF		74MT350FAF		74MT35EFAF			
263	—	—	200	250	—	3RW4446-6BC35	74NT35BFAF		74NT35DFAF		74NT350FAF		74NT35EFAF			
326	—	—	250	300	—	3RW4447-6BC35	74PT35BFAF		74PT35DFAF		74PT350FAF		74PT35EFAF			
494	—	—	400	500	—	3RW4453-6BC35	74QT35BFAF				74QT350FAF					
551	—	—	450	550	—	3RW4454-6BC35	74RT35BFAF				74RT350FAF					
615	—	—	500	600	—	3RW4455-6BC35	74ST35BFAF				74ST350FAF					
693	—	—	550	650	—	3RW4456-6BC35	74TT35BFAF				74TT350FAF					
780	—	—	600	700	—	3RW4457-6BC35	74WT35BFAF				74WT350FAF					

① Starter size is dependent on the nameplate Full Load Amps (FLA) rating of the motor. HPs are for reference only. Enclosed ratings are at 40°C.

② Starter selection is dependent on type of application. Im = FLA rating of motor.

Modification **Available modifications in STANDARD enclosure**	**3RW Version**	**Enclosed Style**	**Enclosure NEMA Type**	**Mod Suffix**	**List Price Adder $**
Push Buttons					
Start/Stop	3RW40/44	73/74	ALL	A1	
Emergency Stop	3RW40/44	73/74	ALL	ES	
Selector Switches					
Hand-Off-Auto	3RW40/44	73/74	ALL	A3	
Hand-Off-Auto w/ start pushbutton	3RW40/44	73/74	ALL	S3	
Off-On	3RW40/44	73/74	ALL	A4	
Pilot Light					
Red 'On'	3RW40/44	73/74	ALL	FA	
Green 'On'	3RW40/44	73/74	ALL	FB	
Red 'Run'	3RW40/44	73/74	ALL	FC	
Green 'Run'	3RW40/44	73/74	ALL	FD	
LED Bulb Upgrade ⑤	3RW40/44	73/74	ALL	FE	
Red 'Off'	3RW40/44	73/74	ALL	FJ	
Green 'Off'	3RW40/44	73/74	ALL	FK	
Amber 'Fault'	3RW40/44	73/74	ALL	FL	
White 'Control Power On'	3RW40/44	73/74	ALL	FW	
Red, 'On' Push-to-Test	3RW40/44	73/74	ALL	FS	
Green 'On' Push-to-Test	3RW40/44	73/74	ALL	FT	
Green 'Off' Push-to-Test	3RW40/44	73/74	ALL	FU	
Custom pilot light (state color and nameplate text)	3RW40/44	73/74	ALL	FZ	
Through the Door Metering					
External keypad for 3RW44	3RW44	73/74	1,12	K1	
Elapse time meter	3RW40/44	73/74	1,12 (120V)	M5	
Control Options					
Profibus Communication Module (installed-connection cable not supplied)	3RW44	73/74	ALL	P1	
Profinet Communication Module (installed-connection cable not supplied)	3RW44	73/74	ALL	P2	
Ground Lug - 1 Conductor	3RW40/44	73/74	ALL	L10	
Alarm Package (horn, light, relay & push button)	3RW40/44	73/74	1,3R,12	M7	
Electronic 8 function timing relay (.05s - 100h) 24V/100-127V supplied mounted and unwired	3RW40/44	73/74	ALL	TR	
Control Relay supplied mounted and unwired (4 pole max)	3RW40/44	73/74	ALL	R04	
				R22	
				R40	
Circuit Breaker Shunt Trip (included std in 3RW40 versions)	3RW44	74	ALL	L6	
Function identification plate w/ marking as specified	3RW40/44	73/74	ALL	N1	
Service Entrance Labeled	3RW40/44	74	ALL	N3	
Terminal Block 3 point	3RW40/44	73/74	ALL	TC3	
Terminal Block 6 point	3RW40/44	73/74	ALL	TC6	
Terminal Block 9 point	3RW40/44	73/74	ALL	TC9	
Terminal Block 12 point	3RW40/44	73/74	ALL	TC12	

Emergency HP Rated Bypass Starter	**3RW Version**	**Class**	**Enclosure NEMA Type**	**Mod Suffix**	**Amp Rating (3rd character of catalog number)** **List price Adder $**								
	3RW40 new	73/74	1/12/3R/4	A12	A,B	C,D,E	FGH	J	—	—	—	—	—
									—	—	—	—	—
	3RW40 ②	73/74	1/12/3R/4	A12	—	—	A	B,C	D	E,F	—	—	—
					—	—					—	—	—
	3RW44	73	1/12/3R/4	A12	A,B,C ④	D,E ④	F,G,H	J,K,L	M	N,P	Q	R,S,T,W	Y,Z ①)
	3RW44	74	1/12/3R/4	A12	A,B,C	D,E	F,G,H	J,K,L	M	N,P	Q	R,S,T,W	Y,Z ①

Available Modifications **Requiring the MODIFIED OPTIONS Box Size** **(to be used with the selections ending in GA*)**	**3RW Version**	**Class**	**Enclosure NEMA Type**	**Mod Suffix**	**Amp Rating (3rd character of catalog number)** **List price Adder $**								
	3RW40				—	—	A	B,C	D	E,F	—	—	—
	3RW44				A,B,C	D,E	F,G,H	J,K,L	M	N,P	Q	R,S,T,W	Y,Z ①
Isolation Contactor ③	3RW40/44	73/74	1/12/3R/4	IC									
100 VA Extra CPT Capacity	3RW40/44	73/74	ALL	CA									
Space Heater (120V separate control)	3RW40/44	73/74	ALL	SH									
Space Heater w/ T-stat (120V separate control)	3RW40/44	73/74	ALL	ST									
Lightning Arrestor	3RW40/44	73/74	ALL	L									

① (A) For sizes 73YT & 73ZT, mods IC & A12 are available and can have both either individually or both at the same time; (B) For sizes 74YT & 74ZT (combination w\CB), mods IC & A12 are only available individually (NOT both at the same time); (C) For sizes 74YT & 74ZT (combination w\ fusible disc), mods IC & A12 are NOT available individually or both.
② An isolation contactor is included for 3RW40 version with bypass.
③ An isolation contactor is standard on all 3RW40 new styles
④ Includes mod box price, change 8th character to G.
⑤ Pilot lights are transformer type as standard. For LED type bulbs, order suffix FE in addition to the standard device suffix(es). For example, to order red "ON" and green "OFF" pilot lights with LED bulbs, order FA, FK and FE.

Overview

The SIRIUS 3RW30 soft starters reduce the motor voltage through variable phase control and increase it in ramp-like mode from a selectable starting voltage up to mains voltage. During starting, these devices limit the torque as well as the current and prevent the shocks which arise during direct starts or wye-delta starts. In this way, mechanical loads and mains voltage dips can be reliably reduced.

Soft starting reduces the stress on the connected equipment and results in lower wear and therefore longer periods of trouble-free production. The selectable start value means that the soft starters can be adjusted individually to the requirements of the application in question and unlike wye-delta starters are not restricted to two-stage starting with fixed voltage ratios.

The SIRIUS 3RW30 soft starters are characterized above all by their small space requirements. Integrated bypass contacts mean that no power loss has to be taken into the bargain at the power semiconductors (thyristors) after the motor has started up. This cuts down on heat losses, enabling a more compact design and making external bypass circuits superfluous.

Various versions of the SIRIUS 3RW30 soft starters are available:

- Standard version for fixed-speed three-phase motors, sizes S00, S0, S2 and S3, with integrated bypass contact system
- Version for fixed-speed three-phase motors in a 22.5 mm enclosure without bypass

Soft starters rated up to 75Hp (at 460 V) for standard applications in three-phase networks are available. Extremely small sizes, low power losses and simple commissioning are just three of the many advantages of this soft starter.

Function

The space required by the compact SIRIUS 3RW30 soft starter is often only about one third of that required by a contactor assembly for wye-delta starting of comparable rating. This not only saves space in the control cabinet and on the standard mounting rail but also does away completely with the wiring work needed for wye-delta starters. This is notable in particular for higher motor ratings which are only rarely available as fully wired solutions.

At the same time the number of cables from the starter to the motor is reduced from six to three. Compact dimensions, short start-up times, easy wiring and fast commissioning make themselves felt as clear-cut cost advantages.

The bypass contacts of these soft starters are protected during operation by an integrated solid-state arc quenching system. This prevents damage to the bypass contacts in the event of a fault, e. g. brief disconnection of the control voltage, mechanical shocks or life-related component defects on the coil operating mechanism or main contact spring.

The new series of devices comes with the "polarity balancing" control method, which is designed to prevent direct current components in two-phase controlled soft starters. On two-phase controlled soft starters the current resulting from superimposition of the two controlled phases flows in the uncontrolled phase. This results for physical reasons in an asymmetric distribution of the three phase currents during the motor ramp-up. This phenomenon cannot be influenced, but in most applications it is non-critical.

Controlling the power semiconductors results not only in this unbalance, however, but also in the previously mentioned direct current components which can cause severe noise generation on the motor at starting voltages of less than 50 %. The control method used for these soft starters eliminates these direct current components during the ramp-up phase and prevents the braking torque which they can cause.

It creates a motor ramp-up that is uniform in speed, torque and current rise, thus permitting a particularly gentle, two-phase starting of the motors. At the same time the acoustic quality of the starting operation comes close to the quality of a three-phase controlled soft starter. This is made possible by the ongoing dynamic harmonizing and balancing of current half-waves of different polarity during the motor ramp-up. Hence the name "polarity balancing".

- Soft starting with voltage ramp; the starting voltage setting range U_s is 40 % to 100 % and the ramp time t_R can be set from 0 s to 20 s
- Integrated bypass contact system to minimize power loss
- Setting with two potentiometers
- Simple mounting and commissioning
- Mains voltages at 50/60 Hz, 200 to 480 V
- Two control voltage versions 24 V AC/DC and 110 to 230 V AC/DC
- Wide temperature range from -25 °C to +60 °C
- The built-in auxiliary contact ensures user-friendly control and possible further processing within the system (for status graphs see page 17-248)

Technical specifications

Type				3RW30 1., 3RW30 2.		3RW30 3., 3RW30 4.	
Control electronics							
Rated values		Terminal					
Rated control supply voltage		A1/A2	V	24	110 ... 230	24	110 ... 230
• Tolerance			%	±20	-15/+10	±20	-15/+10
Rated control supply current							
• STANDBY			mA	< 50	6	20	< 50
• During pick-up			mA	< 100	15	< 4000	< 500
• ON			mA	< 100	15	20	< 50
Rated frequency			Hz	50/60			
• Tolerance			%	±10			
Control input							
IN				ON/OFF			
Power consumption with version							
• 24 V DC			mA	Approx. 12			
• 110/230 V AC			mA	AC: 3/6; DC: 1.5/3			
Relay outputs							
Output 1	ON	13/14		Operating indication (NO)			
Rated operational current			A A	3 AC-15/AC-14 at 230 V, 1 DC-13 at 24 V			
Protection against overvoltages				Protection by means of varistor through contact			
Short-circuit protection				4 A gL/gG operational class; 6 A quick (fuse is not included in scope of supply)			
Operating indications			LEDs	**DEVICE**	**STATE/BYPASSED/ FAILURE**	**DEVICE**	**STATE/BYPASSED/ FAILURE**
Off				Green	Off	Green	Off
Start				Green	Green flashing	Green	Green flashing
Bypass				Green	Green	Green	Green
Error signals							
• 24 V DC: $U < 0.75 \times U_s$ or $U > 1.25 \times U_s$				Off	Red	Off	Red
• 110 ... 230 V AC: $U < 0.75 \times U_s$ or $U > 1.15 \times U_s$				Off	Red	Off	Red
Electrical overloading of bypass (reset by removing IN command)				Yellow	Red	--	--
Missing mains voltage, phase failure, missing load				Green	Red	Green	Red
Device fault				Red	Red	Red	Red

Type			3RW30 1. ... 3RW30 4.	Factory default
Control times and parameters				
Control times				
Closing time (with connected control voltage)		ms	< 50	
Closing time (automatic/mains contactor mode)		ms	< 300	
Mains failure bridging time				
Control supply voltage		ms	50	
Mains failure response time[1]				
Load circuit		ms	500	
Starting parameters				
• Starting time		s	0 ... 20	7.5
• Starting voltage		%	40 ... 100	40
Start-up detection			No	
Operating mode output 13/14				
Rising edge at	Start command		ON	
Falling edge at	Off command			

[1] Mains failure detection only in standby state, not during operation.

Type		3RW30 1.-.BB.4 ... 3RW30 4.-.BB.4
Power electronics		
Rated operational voltage Tolerance	V AC %	200 ... 480 -15/+10
Rated frequency Tolerance	Hz %	50/60 ±10
Uninterrupted duty at 40 °C (% of I_e)	%	115
Minimum load (% of I_e)	%	10 (at least 2 A)
Maximum cable length between soft starter and motor	m	300
Permissible installation height	m	5000 (derating from 1000, see characteristic curves); higher on request
Permissible mounting position (auxiliary fan not available)		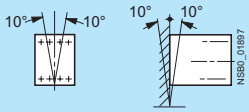
Permissible ambient temperature Operation Storage	 °C °C	 -25 ... +60; (derating from +40) -40 ... +80
Degree of protection		IP20 for 3RW30 1. and 3RW30 2.; IP00 for 3RW30 3. and 3RW30 4.

Type		3RW30 13	3RW30 14	3RW30 16	3RW30 17	3RW30 18
Power electronics		40 °C/**50 °C**/60 °C				
Load rating with rated operational current I_e • Acc. to IEC and UL/CSA[1], for individual mounting at 40/50/60 °C, AC-53a	A	3.6/**3.3**/3	6.5/**6**/5.5	9/**8**/7	12.5/**12**/11	17.6/**17**/14
Power loss • In operation after completed starting with uninterrupted rated operational current (40 °C) approx. • During starting with 300 % I_M (40 °C)	W W	0.25 6	0.5 13	1 20	2 20	4 29
Permissible rated motor current and starts per hour for normal starting (Class 10)						
- Rated motor current I_M[2], starting time 10 s - Starts per hour[3]	A 1/h	3.6/**3.3**/3 200/**150**/70	6.5/**6**/5.5 87/**60**/50	9/**8**/7 50	12.5/**12**/11 85/**70**/60	17.6/**17**/14 62/**46**/60
- Rated motor current I_M[2], starting time 20 s - Starts per hour[3]	A 1/h	3.6/**3.3**/3 150/**100**/50	6.5/**6**/5.5 64/**46**/28	9/**8**/7 35	12.5/**12**/11 62/**47**/37	17.6/**17**/14 45/**32**/43

1) Measurement at 60 °C according to UL/CSA not required.

2) With 300 % I_M.

3) For intermittent duty S4 with ON period = 30 %, T_u = 40 °C, stand-alone installation vertical. The quoted switching frequencies do not apply for automatic mode.

Type		3RW30 26	3RW30 27	3RW30 28
Power electronics		40 °C/**50 °C**/60 °C		
Load rating with rated operational current I_e • Acc. to IEC and UL/CSA[1], for individual mounting at 40/50/60 °C, AC-53a	A	25.3/**23**/21	32.2/**29**/26	38/**34**/31
Power loss • In operation after completed starting with uninterrupted rated operational current (40 °C) approx. • During starting with 300 % I_M (40 °C)	W W	8 47	13 55	19 64
Permissible rated motor current and starts per hour for normal starting (Class 10)				
- Rated motor current I_M[2], starting time 10 s - Starts per hour[3]	A 1/h	25/**23**/21 23	32/**29**/26 23	38/**34**/31 19
- Rated motor current I_M[2], starting time 20 s - Starts per hour[3]	A 1/h	25/**23**/21 15	32/**29**/26 16	38/**34**/31 12

1) Measurement at 60 °C according to UL/CSA not required.

2) With 300 % I_M.

3) For intermittent duty S4 with ON period = 30 %, T_u = 40 °C, stand-alone installation vertical. The quoted switching frequencies do not apply for automatic mode.

Type		3RW30 36	3RW30 37	3RW30 38	3RW30 46	3RW30 47
Power electronics		40 °C/**50 °C**/60 °C				
Load rating with rated operational current I_e						
• Acc. to IEC and UL/CSA[1], for individual mounting at 40/50/60 °C, AC-53a	A	45/**42**/39	63/**58**/53	72/**63**/60	80/**73**/66	106/**98**/90
Power loss						
• In operation after completed starting with uninterrupted rated operational current (40 °C) approx.	W	6	12	15	12	21
• During starting with 300 % I_M (40 °C)	W	79	111	125	144	192
Permissible rated motor current and starts per hour for normal starting (Class 10)						
- Rated motor current I_M[2], starting time 10 s	A	45/**42**/39	63/**58**/53	72/**63**/60	80/**73**/66	106/**98**/90
- Starts per hour[3]	1/h	38	23	22	22	15
- Rated motor current I_M[2], starting time 20 s	A	45/**42**/39	63/**58**/53	72/**63**/60	80/**73**/66	106/**98**/90
- Starts per hour[3]	1/h	26	15	15	15	10

1) Measurement at 60 °C according to UL/CSA not required.

2) With 300 % I_M.

3) For intermittent duty S4 with ON period = 30 %, T_u = 40 °C, stand-alone installation vertical. The quoted switching frequencies do not apply for automatic mode.

Soft starters	Type		3RW30 1.	3RW30 2.	3RW30 3.	3RW30 4.
Conductor cross-sections						
Screw terminals	**Main conductors**					
Front clamping point connected NSB00479	• Solid	mm^2	2 x (1 ... 2.5); 2 x (2.5 ... 6) acc. to IEC 60947	2 x (1 ... 2.5); 2 x (2.5 ... 6) acc. to IEC 60947; max. 1 x 10	2 x (1.5 ... 16)	2 x (2.5 ... 16)
	• Finely stranded with end sleeve	mm^2	2 x (1.5 ... 2.5); 2 x (2.5 ... 6)	2 x (1 ... 2.5); 2 x (2.5 ... 6)	1 x (0.75 ... 25)	1 x (2.5 ... 35)
	• Stranded	mm^2	--	--	1 x (0.75 ... 35)	1 x (4 ... 70)
	• AWG cables					
	- Solid	AWG	2 x (16 ... 12)	2 x (16 ... 12)		
	- Solid or stranded	AWG	2 x (14 ... 10)	2 x (14 ... 10)	1 x (18 ... 2)	1 x (10 ... 2/0)
	- Stranded	AWG	1 x 8	1 x 8	--	--
Rear clamping point connected	• Solid	mm^2	--	--	2 x (1.5 ... 16)	2 x (2.5 ... 16)
	• Finely stranded with end sleeve	mm^2	--	--	1 x (1.5 ... 25)	1 x (2.5 ... 50)
NSB00480	• Stranded	mm^2	--	--	1 x (1.5 ... 35)	1 x (10 ... 70)
	• AWG cables					
	- Solid or stranded	AWG	--	--	1 x (16 ... 2)	1 x (10 ... 2/0)
Both clamping points connected	• Solid	mm^2	--	--	2 x (1.5 ... 16)	2 x (2.5 ... 16)
	• Stranded	mm^2	--	--	2 x (1.5 ... 25)	2 x (10 ... 50)
	• Finely stranded with end sleeve	mm^2	--	--	2 x (1.5 ... 16)	2 x (2.5 ... 35)
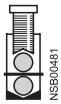 NSB00481	• AWG cables					
	- Solid or stranded	AWG	--	--	2 x (16 ... 2)	2 x (10 ... 1/0)
	• Tightening torque	NM lb.in	2 ... 2.5 18 ... 22	2 ... 2.5 18 ... 22	4.5 40	6.5 58
	Tools		PZ 2	PZ 2	PZ 2	Allen screw 4 mm
	Degree of protection		IP20	IP20	IP20 (IP00 terminal compartment)	IP20 (IP00 terminal compartment)
Spring-type terminals	**Main conductors**					
	• Solid	mm^2	1 ... 4	1 ... 10	--	--
	• Finely stranded with end sleeve	mm^2	1 ... 2.5	1 ... 6, end sleeves without plastic collar	--	--
	• AWG cables					
	- Solid or stranded (finely stranded)	AWG	16 ... 14	16 ... 10	--	--
	- Stranded	AWG	16 ... 12	1 x 8	--	--
	Tools		DIN ISO 2380-1A0; 5 x 3	DIN ISO 2380-1A0; 5 x 3	--	--
	Degree of protection		IP20	IP20	--	--
Busbar connections	**Main conductors**					
	• With cable lug acc. to DIN 46234 or max. 20 mm wide					
	- Stranded	mm^2	--	--	--	2 x (10 ... 70)
	- Finely stranded	mm^2	--	--	--	2 x (10 ... 50)
	• AWG cables, solid or stranded	AWG	--	--	--	2 x (7 ... 1/0)

Soft starters	Type		3RW30 1. ... 3RW30 4.
Conductor cross-sections			
Auxiliary conductors (1 or 2 conductors can be connected)**:**			
	Screw terminals		
	• Solid	mm^2	2 x (0.5 ... 2.5)
	• Finely stranded with end sleeve	mm^2	2 x (0.5 ... 1.5)
	• AWG cables		
	- Solid or stranded	AWG	2 x (20 ... 14)
	- Finely stranded with end sleeve	AWG	2 x (20 ... 16)
	• Terminal screws		
	- Tightening torque	NM lb.in	0.8 ... 1.2 7 ... 10.3
	Spring-type terminals		
	• Solid	mm^2	2 x (0.25 ... 2.5)
	• Finely stranded with end sleeve	mm^2	2 x (0.25 ... 1.5)
	• AWG cables, solid or stranded	AWG	2 x (24 ... 14)

Type		3RW30 03
Control electronics		
Rated values		
Rated control supply voltage	V	24 ... 230 AC/DC
• Tolerance	%	± 10
Rated control supply current	mA	25 ... 4
Rated frequency at AC	Hz	50/60
• Tolerance	%	± 10
Starting time	s	0.1 ... 20 (adjustable)
Starting voltage	%	40 ... 100 (adjustable)
Ramp-down time	s	0 ... 20 (adjustable)
Power electronics		
Rated operational voltage	V AC	200 ... 400
Tolerance	%	± 10
Rated frequency	Hz	50/60
Tolerance	%	±10
Uninterrupted duty (% of I_e)	%	100
Minimum load[1] (% of I_e); at 40 °C	%	9
Maximum conductor length between soft starter and motor	m	100[2]
Degree of protection acc. to IEC 60529		IP20 (IP00 terminal compartment)
Permissible installation height	m	5000 (derating from 1000, see characteristic curves); higher on request
Permissible mounting position		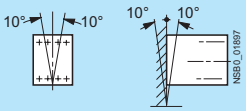
Permissible ambient temperature		
Operation	°C	-25 ... +60; (derating from +40)
Storage	°C	-40 ... +80
Load rating with rated operational current I_e		
• Acc. to IEC and UL/CSA[1], for individual mounting, AC-53a		
- At 40 °C	A	3
- At 50 °C	A	2.6
- At 60 °C	A	2.2
• Acc. to IEC and UL/CSA[1], for butt-mounting, AC-53a		
- At 40 °C	A	2.6
- At 50 °C	A	2.2
- At 60 °C	A	1.8
Power loss		
• In operation after completed starting with uninterrupted rated operational current (40 °C) approx.	W	6.5
• At utilization of max. switching frequency	W	3
Permissible starts per hour		
• For intermittent duty S4, T_u = 40 °C, stand-alone installation vertical	1/h	1500
• ON period = 70 %	% I_e/s	300/0.2
Conductor cross-sections		
Screw terminals (1 or 2 conductors connectable) For standard screwdriver size 2 and Pozidriv 2		
• **Main conductors**		
- Solid	mm²	1 x (0.5 ... 4); 2 x (0.5 ... 2.5)
- Finely stranded with end sleeve	mm²	1 x (0.5 ... 2.5); 2 x (0.5 ... 1.5)
- Stranded	mm²	--
- AWG cables, solid or stranded	AWG	2 x (20 ... 14)
- Terminal screws		M3, PZ2
- Tightening torque	NM	0.8 ... 1.2
	lb.in	7.1 ... 8.9
• **Auxiliary conductors**		
- Solid	mm²	1 x (0.5 ... 4); 2 x (0.5 ... 2.5)
- Finely stranded with end sleeve	mm²	1 x (0.5 ... 2.5); 2 x (0.5 ... 1.5)
- AWG cables, solid or stranded	AWG	2 x (20 ... 14)
- Terminal screws		M3, PZ2
- Tightening torque	NM	0.8 ... 1.2
	lb.in	7 ... 8.9
Spring-type terminals — **Main and auxiliary conductors**		
• Solid	mm²	2 x (0.25 ... 1.5)
• Finely stranded with end sleeve	mm²	2 x (0.25 ... 1)
• AWG cables, solid or stranded	mm²	2 x (24 ... 16)

[1] The rated motor current (specified on the motor's name plate) should at least amount to the specified percentage of the SIRIUS soft starter unit's rated operational current I_e.

[2] If this value is exceeded, problems with line capacities may arise, which can result in false firing.

	Standard	Parameters
Electromagnetic compatibility Acc. to EN 60947-4-2		
EMC interference immunity		
Electrostatic discharge (ESD)	EN 61000-4-2	±4 kV contact discharge, ±8 kV air discharge
Electromagnetic RF fields	EN 61000-4-3	Frequency range: 80 ... 2000 MHz with 80 % at 1 kHz Degree of severity 3: 10 V/m
Conducted RF interference	EN 61000-4-6	Frequency range: 150 kHz ... 80 MHz with 80 % at 1 kHz Interference 10 V
RF voltages and RF currents on cables		
• Burst	EN 61000-4-4	±2 kV/5 kHz
• Surge	EN 61000-4-5	±1 kV line to line ±2 kV line to earth
EMC interference emission		
EMC interference field strength	EN 55011	Limit value of Class A at 30 ... 1000 MHz, limit value of Class B for 3RW30 2.; 24 V AC/DC
Radio interference voltage	EN 55011	Limit value of Class A at 0.15 ... 30 MHz, limit value of Class B for 3RW30 2.; 24 V AC/DC
Radio interference suppression filters		
Degree of noise suppression A (industrial applications)	Not required	
Degree of noise suppression B (applications for residential areas) Control voltage • 230 V AC/DC • 24 V AC/DC	Not available[1)] Not required for 3RW30 1. and 3RW30 2.; required for 3RW30 3. and 3RW30 4. (see Table)	

[1)] Degree of noise suppression B cannot be obtained through the use of filters as the strength of the electromagnetic field is not attenuated by the filter.

Soft starter type	Rated current	Recommended filters[1)]		
	Soft starters	**Voltage range 200 ... 480 V**		
		Filter type	Rated current filters	Terminals
	A		A	mm^2
3RW30 36	45	4EF1512-1AA10	50	16
3RW30 37	63	4EF1512-2AA10	66	25
3RW30 38	72	4EF1512-3AA10	90	25
3RW30 46	80	4EF1512-3AA10	90	25
3RW30 47	106	4EF1512-4AA10	120	50

[1)] The radio interference suppression filter is used to remove the conducted interference from the main circuit. The field-related emissions comply with degree of noise suppression B. Filter selection applies under standard conditions: 10 starts per hour, start time 4 s at 300 % I_e.

Type Number	Max. Fuse Class K5, RK5, RK1	Max. Fuse Class J	Short Voltage Circuit	Voltage
Standard short circuit ratings 3RW30				
3RW30 13	--	15 A	5 kA	480 V
3RW30 14	--	25 A	5 kA	480 V
3RW30 16	--	36 A	5 kA	480 V
3RW30 17	--	50 A	5 kA	480 V
3RW30 18	--	60 A	5 kA	480 V
3RW30 26	100 A	100 A	5 kA	480 V
3RW30 27	125 A	125 A	5 kA	480 V
3RW30 28	125 A	125 A	5 kA	480 V
3RW30 36	175 A	175 A	10 kA	480 V
3RW30 37	250 A	250 A	10 kA	480 V
3RW30 38	250 A	250 A	10 kA	480 V
3RW30 46	--	300 A	10 kA	480 V
3RW30 47	--	350 A	10 kA	480 V
High capacity short circuit ratings 3RW30				
3RW30 13	--	15 A	42 kA	480 V
3RW30 14	--	25 A	42 kA	480 V
3RW30 16	--	25 A	42 kA	480 V
3RW30 17	--	25 A	42 kA	480 V
3RW30 18	--	25 A	42 kA	480 V
3RW30 26	60 A	100 A	42 kA	480 V
3RW30 27	60 A	125 A	42 kA	480 V
3RW30 28	60 A	125 A	42 kA	480 V
3RW30 36	100 A	175 A	30 kA	480 V
3RW30 37	100 A	200 A	30 kA	480 V
3RW30 38	100 A	200 A	30 kA	480 V
3RW30 46	110 A	200 A	42 kA	480 V
3RW30 47	110 A	200 A	42 kA	480 V

For solid-state motor controller, Type 3RW301: Applicable in an enclosure with minimum overall dimensions of 200 by 120 by 200 mm.
For solid-state motor controller, Type 3RW302: Applicable in an enclosure with minimum overall dimensions of 370 by 175 by 195 mm.
For solid-state motor controller, Type 3RW303: Applicable in an enclosure with minimum overall dimensions of 450 by 220 by 235 mm.
For solid-state motor controller, Type 3RW304: Applicable in an enclosure with minimum overall dimensions of 450 by 220 by 235 mm.

Fuse assignment

The type of coordination to which the motor feeder with soft starter is mounted depends on the application-specific requirements. Normally, fuseless mounting (combination of motor starter protector/circuit breaker and soft starter) is sufficient.

If type of coordination "2" is to be fulfilled, semiconductor fuses must be fitted in the motor feeder.

Fused version (line protection only)

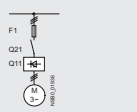

Soft starters ToC 1	Rated current	Line protection, maximum	Rated current	Size	Line contactors (optional)
Q11 Type	A	F1 Type	A		Q21
Type of coordination "1"[1]: I_q = 65 kA at 480 V 10 %					
3RW30 03[2]	3	3NA3 805[3]	20	000	3RT10 15
3RW30 13	3.6	3NA3 803-6	10	000	3RT10 15
3RW30 14	6.5	3NA3 805-6	16	000	3RT10 15
3RW30 16	9	3NA3 807-6	20	000	3RT10 16
3RW30 17	12.5	3NA3 810-6	25	000	3RT10 24
3RW30 18	17.6	3NA3 814-6	35	000	3RT10 26
3RW30 26	25	3NA3 822-6	63	00	3RT10 26
3RW30 27	32	3NA3 824-6	80	00	3RT10 34
3RW30 28	38	3NA3 824-6	80	00	3RT10 35
3RW30 36	45	3NA3 130-6	100	1	3RT10 36
3RW30 37	63	3NA3 132-6	125	1	3RT10 44
3RW30 38	72	3NA3 132-6	125	1	3RT10 45
3RW30 46	80	3NA3 136-6	160	1	3RT10 45
3RW30 47	106	3NA3 136-6	160	1	3RT10 46

1) The types of coordination are explained in more detail under "3RA1 Fuseless Load Feeders".
The type of coordination "1" refers only to soft starters in combination with the stipulated protective device (motor starter protector/circuit breaker/fuse), not to any additional components in the feeder.

2) I_q = 50 kA at 400 V.

3) 3NA3 805-1 (LV HRC00), 5SB2 61 (DIAZED), 5SE2 201-6 (NEOZED)

Fused version with 3NE1 SITOR fuses (semiconductor and line protection)

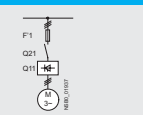

For matching fuse bases see Catalog LV 1 under "SENTRON Switching and Protection Devices for Power Distribution" —> "Switch Disconnectors", and Catalog ET B1 under "BETA Protecting" —> "SITOR Semiconductor Fuses" or go to www.siemens.com/sitor —>"Products" —>"BETA Protecting"—>"SITOR"

Soft starters ToC 2	Rated current	All-range fuses	Rated current	Size	Line contactors (optional)
Q11 Type	A	F'1 Type	A		Q21
Type of coordination "2"[1]: I_q = 65 kA at 480 V 10 %					
3RW30 03[2]	3	3NE1 813-0[3]	16	000	3RT10 15
3RW30 13	3.6	3NE1 813-0	16	000	3RT10 15
3RW30 14	6.5	3NE1 813-0	16	000	3RT10 15
3RW30 16	9	3NE1 813-0	16	000	3RT10 16
3RW30 17	12.5	3NE1 813-0	16	000	3RT10 24
3RW30 18	17.6	3NE1 814-0	20	000	3RT10 26
3RW30 26	25	3NE1 803-0	35	000	3RT10 26
3RW30 27	32	3NE1 020-2	80	00	3RT10 34
3RW30 28	38	3NE1 020-2	80	00	3RT10 35
3RW30 36	45	3NE1 020-2	80	00	3RT10 36
3RW30 37	63	3NE1 820-0	80	000	3RT10 44
3RW30 38	72	3NE1 820-0	80	000	3RT10 45
3RW30 46	80	3NE1 021-0	100	00	3RT10 45
3RW30 47	106	3NE1 022-0	125	00	3RT10 46

1) The types of coordination are explained in more detail under "3RA1 Fuseless Load Feeders".
The type of coordination "2" refers only to soft starters in combination with the stipulated protective device (motor starter protector/circuit breaker/fuse), not to any additional components in the feeder.

2) I_q = 50 kA at 400 V.

3) No SITOR fuse required!
Alternatively: 3NA3 803 (LV HRC00), 5SB2 21 (DIAZED), 5SE2 206 (NEOZED).

ToC 1	Type of coordination "1"
ToC 2	Type of coordination "2"
	The types of coordination are explained in more detail under "3RA1 Fuseless Load Feeders".
	These types of coordination are indicated in the Technical specifications by gray backgrounds.

Fused version with 3NE3 SITOR fuses (semiconductor protection by fuse, line and overload protection by motor starter protector; alternatively, installation with contactor and overload relay possible)

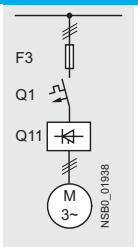

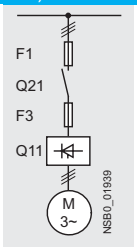

For matching fuse bases see Catalog LV 1 under "SENTRON Switching and Protection Devices for Power Distribution" —> "Switch Disconnectors", and Catalog ET B1 under "BETA Protecting" —> "SITOR Semiconductor Fuses" or go to www.siemens.com/sitor —>"Products" —>"BETA Protecting" —>"SITOR"

Soft starters		Semiconductor fuses, minimum			Semiconductor fuses, maximum			Semiconductor fuses, minimum		
ToC 2	Rated current		Rated current	Size		Rated current	Size		Rated current	Size
Q11 Type	A	F3 Type	A		F3 Type	A		F3 Type	A	
Type of coordination "2"[1]: I_q = 65 kA at 480 V 10 %										
3RW30 03[2]	3	--	--	--	--	--	--			
3RW30 13	3.6	--	--	--	--	--	--	3NE4 101	32	0
3RW30 14	6.5	--	--	--	--	--	--	3NE4 101	32	0
3RW30 16	9	--	--	--	--	--	--	3NE4 101	32	0
3RW30 17	12.5	--	--	--	--	--	--	3NE4 101	32	0
3RW30 18	17.6	--	--	--	3NE3 221	100	1	3NE4 101	32	0
3RW30 26	25	--	--	--	3NE3 221	100	1	3NE4 102	40	0
3RW30 27	32	--	--	--	3NE3 222	125	1	3NE4 118	63	0
3RW30 28	38	--	--	--	3NE3 222	125	1	3NE4 118	63	0
3RW30 36	45	--	--	--	3NE3 224	160	1	3NE4 120	80	0
3RW30 37	63	--	--	--	3NE3 225	200	1	3NE4 121	100	0
3RW30 38	72	3NE3 221	100	1	3NE3 227	250	1	--	--	--
3RW30 46	80	3NE3 222	125	1	3NE3 225	200	1	--	--	--
3RW30 47	106	3NE3 224	160	1	3NE3 231	350	1	--	--	--

Soft starters		Semiconductor fuses max.			Semiconductor fuses min.			Semiconductor fuses max.			Cylindrical fuses	
ToC 2	Rated current		Rated current	Size		Rated current	Size		Rated current	Size		Rated current
Q11 Type	A	F3 Type	A		F3 Type	A		F3 Type	A		F3 Type	A
Type of coordination "2"[1]: I_q = 65 kA at 480 V 10 %												
3RW30 03[2]	3	--	--	--	3NE8 015-1	25	00	3NE8 015-1	25	00	3NC1 010	10
3RW30 13	3.6	--	--	--	3NE8 015-1	25	00	3NE8 015-1	25	00	3NC2 220	20
3RW30 14	6.5	--	--	--	3NE8 015-1	25	00	3NE8 015-1	25	00	3NC2 220	20
3RW30 16	9	--	--	--	3NE8 015-1	25	00	3NE8 015-1	25	00	3NC2 220	20
3RW30 17	12.5	--	--	--	3NE8 015-1	25	00	3NE8 018-1	63	00	3NC2 250	50
3RW30 18	17.6	--	--	--	3NE8 003-1	35	00	3NE8 021-1	100	00	3NC2 263	63
3RW30 26	25	3NE4 117	50	0	3NE8 017-1	50	00	3NE8 021-1	100	00	3NC2 263	63
3RW30 27	32	3NE4 118	63	0	3NE8 018-1	63	00	3NE8 022-1	125	00	3NC2 280	80
3RW30 28	38	3NE4 118	63	0	3NE8 020-1	80	00	3NE8 022-1	125	00	3NC2 280	80
3RW30 36	45	3NE4 120	80	0	3NE8 020-1	80	00	3NE8 024-1	160	00	3NC2 280	80
3RW30 37	63	3NE4 121	100	0	3NE8 021-1	100	00	3NE8 024-1	160	00	--	--
3RW30 38	72	--	--	--	3NE8 022-1	125	00	3NE8 024-1	160	00	--	--
3RW30 46	80	--	--	--	3NE8 022-1	125	00	3NE8 024-1	160	00	--	--
3RW30 47	106	--	--	--	3NE8 024-1	160	00	3NE8 024-1	160	00	--	--

Soft starters		Line contactors	Motor starter protectors		Line protection, maximum		
ToC 2	Rated current	(optional)	400 V +10 %	Rated current		Rated current	Size
Q11 Type	A	Q21	Q1 Type	A	F1 Type	A	
Type of coordination "2"[1]: I_q = 65 kA at 480 V 10 %							
3RW30 03[2]	3	3RT10 15	3RV10 11-1EA10	4	3NA3 805[3]	20	000
3RW30 13	3.6	3RT10 15	3RV10 21-1FA10	5	3NA3 803-6	10	000
3RW30 14	6.5	3RT10 15	3RV10 21-1HA10	8	3NA3 805-6	16	000
3RW30 16	9	3RT10 16	3RV10 21-1JA10	10	3NA3 807-6	20	000
3RW30 17	12.5	3RT10 24	3RV10 21-1KA10	12.5	3NA3 810-6	25	000
3RW30 18	17.6	3RT10 26	3RV10 21-1BA10	20	3NA3 814-6	35	000
3RW30 26	25	3RT10 26	3RV10 31-4DA10	25	3NA3 822-6	63	00
3RW30 27	32	3RT10 34	3RV10 31-4EA10	32	3NA3 824-6	80	00
3RW30 28	38	3RT10 35	3RV10 31-4FA10	40	3NA3 824-6	80	00
3RW30 36	45	3RT10 36	3RV10 31-4GA10	45	3NA3 130-6	100	1
3RW30 37	63	3RT10 44	3RV10 41-4JA10	63	3NA3 132-6	125	1
3RW30 38	72	3RT10 45	3RV10 41-4KA10	75	3NA3 132-6	125	1
3RW30 46	80	3RT10 45	3RV10 41-4LA10	90	3NA3 136-6	160	1
3RW30 47	106	3RT10 46	3RV10 41-4MA10	100	3NA3 136-6	160	1

1) The types of coordination are explained under "3RA1 Fuseless Load Feeders". The type of coordination "2" refers only to soft starters in combination with the stipulated protective device (motor starter protector/circuit breaker/fuse), not to any additional components in the feeder.

2) I_q = 50 kA at 400 V.

3) 3NA3 805-1 (LV HRC00), 5SB2 61 (DIAZED).

Characteristic curves

Permissible installation height

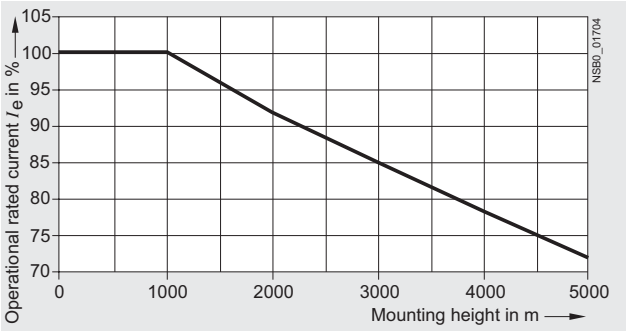

At an installation height above 2000 m, the max. permissible operational voltage is reduced to 460 V.

More information

Application examples for normal starting (Class 10)

Normal starting Class 10 (up to 20 s with 300 % $I_{n\ motor}$),
The soft starter rating can be selected to be as high as the rating of the motor used

Application		Conveyor belt	Roller conveyor	Compressor	Small fan	Pump	Hydraulic pump
Starting parameters							
• Voltage ramp and current limiting							
- Starting voltage	%	70	60	50	40	40	40
- Starting time	s	10	10	20	20	10	10

Note:
These tables present sample set values and device sizes. They are intended only for the purposes of information and are not binding. The set values depend on the application in question and must be optimized during commissioning.
The soft starter dimensions should be checked where necessary with the Win-Soft Starter software or with the help of Technical Assistance.

Configuration

The 3RW solid-state motor controllers are designed for easy starting conditions. In the event of deviating conditions or increased switching frequency, it may be necessary to choose a larger device. For accurate dimensioning, use the Win-Soft Starter selection and simulation program.

If necessary, an overload relay for heavy starting must be selected where long starting times are involved. PTC sensors are recommended.

In the motor feeder between the SIRIUS 3RW soft starter and the motor, no capacitive elements are permitted (e. g. no reactive-power compensation equipment). In addition, neither static systems for reactive-power compensation nor dynamic PFC (Power Factor Correction) must be operated in parallel during starting and ramp-down of the soft starter. This is important to prevent faults arising on the compensation equipment and/or the soft starter.

All elements of the main circuit (such as fuses, controls and overload relays) should be dimensioned for direct starting, following the local short-circuit conditions. Fuses, controls and overload relays must be ordered separately. Please observe the maximum switching frequencies specified in the technical specifications.

Note:
When induction motors are switched on, voltage drops occur as a rule on starters of all types (direct starters, wye-delta starters, soft starters). The infeed transformer must always be dimensioned such that the voltage dip when starting the motor remains within the permissible tolerance. If the infeed transformer is dimensioned with only a small margin, it is best for the control voltage to be supplied from a separate circuit (independently of the main voltage) in order to avoid the potential switching off of the soft starter.

Schematic circuit diagram

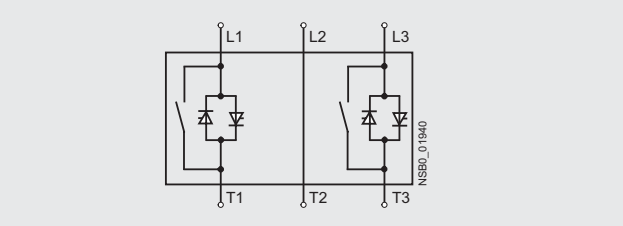

A bypass contact system is already integrated in the 3RW30 soft starter and therefore does not have to be ordered separately.

Status graphs

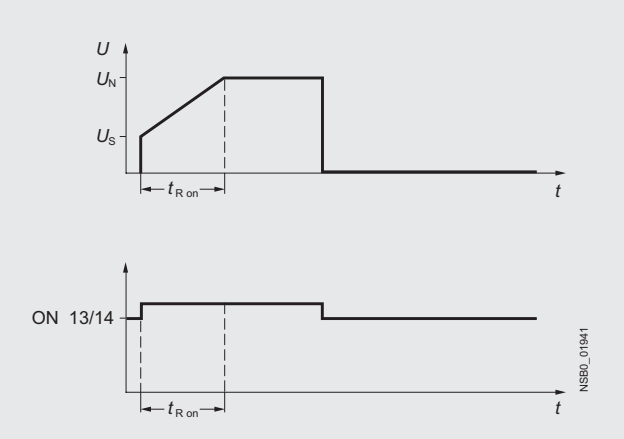

Win-Soft Starter selection and simulation program

With this software, you can simulate and select all Siemens soft starters, taking into account various parameters such as mains properties, motor and load data, and special application requirements.

The software is a valuable tool, which makes complicated, lengthy manual calculations for determining the required soft starters superfluous.

The Win-Soft Starter selection and simulation program can be downloaded from:
www.usa.siemens.com/softstarters > Software

More information can be found on the Internet at:
www.usa.siemens.com/softstarters

Overview

SIRIUS 3RW40 soft starters have all the same advantages as the 3RW30 soft starters.

The SIRIUS 3RW40 soft starters are characterized above all by their small space requirements. Integrated bypass contacts mean that no power loss has to be taken into the bargain at the power semiconductors (thyristors) after the motor has started up. This cuts down on heat losses, enabling a more compact design and making external bypass circuits superfluous.

At the same time this soft starter comes with additional integrated functions such as adjustable current limiting, motor overload and intrinsic device protection, and optional thermistor motor protection. The higher the motor rating, the more important these functions because they make it unnecessary to purchase and install protection equipment such as overload relays.

Internal intrinsic device protection prevents the thermal overloading of the thyristors and the power section defects this can cause. As an option the thyristors can also be protected by semiconductor fuses from short-circuiting.

Thanks to integrated status monitoring and fault monitoring, this compact soft starter offers many different diagnostics options. Up to four LEDs and relay outputs permit differentiated monitoring and diagnostics of the operating mechanism by indicating the operating state as well as for example mains or phase failure, missing load, non-permissible tripping time/class setting, thermal overloading or device faults.

Soft starters rated up to 300 Hp (at 460 V) for standard applications in three-phase networks are available. Extremely small sizes, low power losses and simple start-up are just three of the many advantages of the SIRIUS 3RW40 soft starters.

"Increased safety" type of protection EEx e according to ATEXdirective 94/9/EC

The 3RW40 soft starter sizes S0 to S12 are suitable for the starting of explosion-proof motors with "increased safety" type of protection EEx e.
See "Appendix" –> "Standards and approvals" –> "Type overview of approved devices for potentially explosive areas (ATEX explosion protection)".

Function

The space required by the compact SIRIUS 3RW40 soft starter is often only about one third of that required by a contactor assembly for wye-delta starting of comparable rating. This not only saves space in the control cabinet and on the standard mounting rail but also does away completely with the wiring work needed for wye-delta starters. This is notable in particular for higher motor ratings which are only rarely available as fully wired solutions.

At the same time the number of cables from the starter to the motor is reduced from six to three. Compact dimensions, short start-up times, easy wiring and fast commissioning make themselves felt as clear-cut cost advantages.

The bypass contacts of these soft starters are protected during operation by an integrated solid-state arc quenching system. This prevents damage to the bypass contacts in the event of a fault, e. g. brief disconnection of the control voltage, mechanical shocks or life-related component defects on the coil operating mechanism or main contact spring.

The starting current of particularly powerful operating mechanisms can place an unjustifiable load on the local supply system. Soft starters reduce this starting current by means of their voltage ramp. Thanks to the adjustable current limiting, the SIRIUS 3RW40 soft starter takes even more pressure off the supply system. It leaves the set start ramp during the ramp-up – the ramp gradient is fixed by the starting voltage and the ramp time – as soon as the selected current limit is reached. From this moment the voltage of the soft starter is controlled so that the current supplied to the motor remains constant. This process is ended either by completion of the motor ramp-up or by tripping by the intrinsic device protection or the motor overload protection. As the result of this function the actual motor ramp-up can well take longer than the ramp time selected on the soft starter.

Thanks to the integrated motor overload protection according to IEC 60947-4-2 there is no need of an additional overload relay on the new soft starters. The rated motor current, the setting of the overload tripping time (Class times) and the reset of the motor overload protection function can be adjusted easily and quickly. Using a 4-step rotary potentiometer it is possible to set different overload tripping times on the soft starter. In addition to Class 10, 15 and 20 it is also possible to switch off the motor overload protection if a different motor management control device is to be used for this function, e. g. with connection to PROFIBUS.

Device versions with thermistor motor protection evaluation are available up to a rating of 55 kW (at 400 V). A "Thermoclick" measuring probe can be connected directly, as can a PTC of type A. Thermal overloading of the motor, open circuits and short-circuits in the sensor circuit all result in the direct disconnection of the soft starter. And if ever the soft starter trips, various reset options are available the same as with intrinsic device protection and motor load protection: manually with the reset button, automatically or remotely through brief disconnection of the control voltage.

The new series of devices comes with the "polarity balancing" control method, which is designed to prevent direct current components in two-phase controlled soft starters. On two-phase controlled soft starters the current resulting from superimposition of the two controlled phases flows in the uncontrolled phase. This results for physical reasons in an asymmetric distribution of the three phase currents during the motor ramp-up. This phenomenon cannot be influenced, but in most applications it is non-critical.

Controlling the power semiconductors results not only in this unbalance, however, but also in the previously mentioned direct current components which can cause severe noise generation on the motor at starting voltages of less than 50 %.

The control method used for these soft starters eliminates these direct current components during the ramp-up phase and prevents the braking torque which they can cause. It creates a motor ramp-up that is uniform in speed, torque and current rise, thus permitting a particularly gentle, two-phase starting of the motors. At the same time the acoustic quality of the starting operation comes close to the quality of a three-phase controlled soft starter. This is made possible by the on-going dynamic harmonizing and balancing of current half-waves of different polarity during the motor ramp-up. Hence the name "polarity balancing".

As an option the thyristors can also be protected by SITOR semiconductor fuses from short-circuiting so that the soft starter is still functional after a short-circuit (type of coordination 2). Three LEDs are used to indicate the operating state as well as possible errors, e. g. non-permissible tripping time (CLASS setting), mains or phase failure, missing load, thermal overloading or device faults.

- Soft starting with voltage ramp; the starting voltage setting range U_s is 40 to 100 % and the ramp time t_R can be set from 0 to 20 s.[3)]
- Smooth ramp-down with voltage ramp; the running down time t_{off} can be set between 0 s to 20 s.[3)]
- Solid-state motor overload and intrinsic device protection
- Optional thermistor motor protection (up to size S3)
- Remote reset (integrated up to size S3, optional for size S6 and larger)
- Adjustable current limiting
- Integrated bypass contact system to minimize power loss
- Setting with potentiometers
- Simple mounting and commissioning
- Integrated status monitoring and fault monitoring
- Mains voltages 50/60 Hz, 200 to 600 V
- Various control voltage versions
  - Sizes S0 to S3:
    24 V AC/DC and
    110 to 230 V AC/DC
  - Sizes S6 to S12:
    115 V AC and 230 V AC.
    Control by way of the internal 24 V DC supply and direct control by means of PLC are possible.
- Wide temperature range from -25 to +60 °C
- Built-in auxiliary contacts ensure user-friendly control and possible further processing within the system (for status graphs see page 17-263)

Technical specifications

Type				3RW40 2.		3RW40 3., 3RW40 4.	
Control electronics							
Rated values		Terminal					
Rated control supply voltage		A1/A2	V	24	110 ... 230	24	110 ... 230
• Tolerance			%	±20	-15/+10	±20	-15/+10
Rated control supply current							
• STANDBY			mA	< 150	< 50	< 200	< 50
• During pick-up			mA	< 200	< 100	< 5000	< 1500
• ON without fan			mA	< 250	< 50	< 200	< 50
• ON with fan			mA	< 300	< 70	< 250	< 70
Rated frequency			Hz	50/60			
• Tolerance			%	±10			
Control inputs							
IN				ON/OFF			
Rated operational current							
• AC			mA	Approx. 12	3/6	Approx. 12	3/6
• DC			mA	Approx. 12	1.5/3	Approx. 12	1.5/3
Relay outputs							
Output 1	ON/RUN mode[1)]	13/14		Operating indication (NO)			
Output 2	BYPASSED	23/24		Bypass indication (NO)			
Output 3	OVERLOAD/FAILURE	95/96/98		Overload/error indication (NC/NO)			
Rated operational current			A	3 AC-15/AC-14 at 230 V,			
			A	1 DC-13 at 24 V			
Protection against overvoltages				Protection by means of varistor through contact			
Short-circuit protection				4 A gL/gG operational class; 6 A quick (fuse is not included in scope of supply)			

1) Factory default: ON mode.

Type				3RW40 5.		3RW40 7.	
Control electronics							
Rated values		Terminal					
Rated control supply voltage		A1/A2	V AC	115	230	115	230
• Tolerance			%	-15/+10		-15/+10	
Rated control supply current STANDBY			mA	15		15	
Rated control supply current ON[1)]			mA	440	200	660	360
Rated frequency			Hz	50/60		50/60	
• Tolerance			%	±10		±10	
Control inputs							
IN				ON/OFF			
Rated operational current			mA	Approx. 10 acc. to DIN 19240			
Rated operational voltage			V DC	24 from internal supply dc+ or external DC supply (acc. to DIN 19240) through terminals and IN			
Relay outputs							
Output 1	ON/RUN mode[2)]	13/14		Operating indication (NO)			
Output 2	BYPASSED	23/24		Bypass indication (NO)			
Output 3	OVERLOAD/FAILURE	95/96/98		Overload/error indication (NC/NO)			
Rated operational current			A	3 AC-15/AC-14 at 230 V,			
			A	1 DC-13 at 24 V			
Protection against overvoltages				Protection by means of varistor through contact			
Short-circuit protection				4 A gL/gG operational class; 6 A quick (fuse is not included in scope of supply)			

1) Values for the coil power consumption at +10 % U_n, 50 Hz.

2) Factory default: ON mode.

3) Actual motor start times are load dependent.

Type		3RW40 2., 3RW40 3., 3RW40 4.		
Control electronics				
Operating indications	LEDs	**DEVICE**	**STATE/BYPASSED/FAILURE**	**OVERLOAD**
Off		Green	Off	Off
Start		Green	Green flashing	Off
Bypass		Green	Green	Off
Ramp-down		Green	Green flashing	Off
Alarm signals				
I_e/Class setting not permissible		Green	Not relevant	Red flashing
Start inhibited/thyristors too hot		Yellow flashing	Not relevant	Off
Error signals				
• 24 V: $U < 0.75 \times U_s$ or $U > 1.25 \times U_s$		Off	Red	Off
• 110 ... 230 V: $U < 0.75 \times U_s$ or $U > 1.15 \times U_s$		Off	Red	Off
Non-permissible I_e/Class setting for edge 0 –> 1 on input IN		Green	Red	Red flashing
Motor protection shut-down (overload thermistor)		Green	Off	Red
Thermistor defective (open circuit, short-circuit)		Green	Off	Red flickering
Thermal overloading of the thyristors		Yellow	Red	Off
Missing mains voltage, phase failure, missing load		Green	Red	Off
Device fault		Red	Red	Off

Type		3RW40 5. and 3RW40 7.			
Control electronics					
Operating indications	LEDs	**DEVICE**	**STATE/BYPASSED**	**FAILURE**	**OVERLOAD**
Off		Green	Off	Off	Off
Start		Green	Green flashing	Off	Off
Bypass		Green	Green	Off	Off
Ramp-down		Green	Green flashing	Off	Off
Alarm signals					
I_e/Class setting not permissible		Green	Not relevant	Not relevant	Red flashing
Start inhibited/thyristors too hot		Yellow flashing	Not relevant	Not relevant	Off
Error signals					
$U < 0.75 \times U_s$ or $U > 1.15 \times U_s$		Off	Off	Red	Off
Non-permissible I_e/Class setting for edge 0 –> 1 on input IN		Green	Off	Red	Red flashing
Motor protection shut-down		Green	Off	Off	Red
Thermal overloading of the thyristors		Yellow	Off	Red	Off
Missing mains voltage, phase failure, missing load		Green	Off	Red	Off
Device fault		Red	Off	Red	Off

Type			3RW40 ..	Factory default
Protection functions				
Motor protection functions				
Trips in the event of			Thermal overloading of the motor	
Trip class to IEC 60947-4-1		Class	10/15/20	10
Phase failure sensitivity		%	> 40	
Overload warning			No	
Thermistor protection acc. to IEC 60947-8, type A/IEC 60947-5-1			Yes[1]	
Reset option after tripping			Manual/automatic/remote reset[2] (MAN/AUTO/REMOTE[2])	
Recovery time		min	5	
Device protection functions				
Trips in the event of			Thermal overloading of the thyristors or bypass[3]	
Reset option after tripping			Manual/automatic/remote reset[2] (MAN/AUTO/REMOTE[2])	
Recovery time				
• During overloading of the thyristors		s	30	
• During overloading of the bypass		s	60	
Control times and parameters				
Control times				
Closing time (with connected control voltage)		ms	< 50	
Closing time (automatic/mains contactor mode)		ms	<300	
Recovery time (closing command in active ramp-down)		ms	100	
Mains failure bridging time				
Control supply voltage		ms	50	
Mains failure response time				
Load circuit		ms	500	
Reclosing lockout after overload trip				
Motor protection trip		min	5	
Device protection trip				
• During overloading of the thyristors		s	30	
• During overloading of the bypass		s	60	
Starting parameters				
Starting time		s	0 ... 20	7.5
Starting voltage		%	40 ... 100	40
Starting current limit			1.3 ... 5 x I_e	5 x I_e
Ramp-down parameters				
Ramp-down time		s	0 ... 20	0
Reset mode parameters (for motor/device protection shut-down)				
Manual reset	LEDs		Off	Off
Automatic reset	LEDs		Yellow	
Remote reset (REMOTE)[2]	LEDs		Green	
Start-up detection			Yes	
Operating mode output 13/14				
Rising edge at	Start command			
Falling edge at	Off command		ON	ON
	Ramp-down end		RUN	

[1] Optional up to size S3 (device variant).

[2] Integrated remote reset (REMOTE) available only for 3RW40 2. to 3RW40 4.; remote reset with 3RU19 accessory module available for 3RW40 5. and 3RW40 7..

[3] Bypass protection up to size S3.

Type		3RW40 2.-..B.4, 3RW40 3.-..B.4, 3RW40 4.-..B.4	3RW40 2.-..B.5, 3RW40 3.-..B.5, 3RW40 4.-..B.5	3RW40 5.-.BB.4, 3RW40 7.-.BB.4	3RW40 5.-.BB.5, 3RW40 7.-.BB.5
Power electronics					
Rated operational voltage Tolerance	V AC %	200 ... 480 -15/+10	400 ... 600 -15/+10	200 ... 460 -15/+10	400 ... 600 -15/+10
Maximum blocking voltage (thyristor)	V AC	1600		1400	1800
Rated frequency Tolerance	Hz %	50/60 ±10			
Uninterrupted duty at 40 °C (% of I_e)	%	115			
Minimum load (% of minimum selectable rated motor current I_M)	%	20 (at least 2 A)			
Maximum cable length between soft starter and motor	m	300			
Permissible installation height	m	5000 (derating from 1000, see characteristic curves); higher on request			
Permissible mounting position • With auxiliary fan (for 3RW40 2. ... 3RW40 4.)		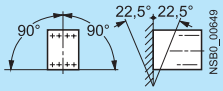			
• Without auxiliary fan (for 3RW40 2. ... 3RW40 4.)		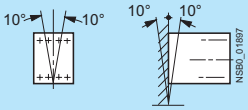		-- (fan integrated in the soft starter)	
Permissible ambient temperature Operation Storage	 °C °C	 -25 ... +60; (derating from +40) -40 ... +80			
Degree of protection		IP20 for 3RW40 2.; IP00 for 3RW40 3. and 3RW40 4.		IP00	

Type		3RW40 24	3RW40 26	3RW40 27	3RW40 28
Power electronics		40 °C/**50 °C**/60 °C			
Load rating with rated operational current I_e • Acc. to IEC and UL/CSA[1], for individual mounting at 40/50/60 °C, AC-53a	A	12.5/**11**/10	25.3/**23**/21	32.2/**29**/26	38/**34**/31
Smallest adjustable rated motor current I_M For the motor overload protection	A	5	10	17	23
Power loss • In operation after completed starting with uninterrupted rated operational current (40 °C) approx.	W	2	8	13	19
• During starting with 300 % I_M (40°C)	W	17	47	55	64
Permissible rated motor current and starts per hour					
• **Normal starting (Class 10)** - Rated motor current I_M[2], starting time 3 s - Starts per hour[3]	 A 1/h	 12.5/**11**/10 50	 25.3/**23**/21 23	 32.2/**29**/26 23	 38/**34**/31 19
- Rated motor current I_M[2][4], starting time 4 s - Starts per hour[3]	A 1/h	12.5/**11**/10 36	25.3/**23**/21 15	32.2/**29**/26 16	38/**34**/31 12
• **Normal starting (Class 15)** - Rated motor current I_M[2], starting time 4.5 s - Starts per hour[3]	 A 1/h	 11/**10**/9 49	 25.3/**23**/21 21	 32.2/**29**/26 18	 38/**34**/31 18
- Rated motor current I_M[2][4], starting time 6 s - Starts per hour[3]	A 1/h	11/**10**/9 36	25.3/**23**/21 14	32.2/**29**/26 13	38/**34**/31 13
• **Normal starting (Class 20)** - Rated motor current I_M[2], starting time 6 s - Starts per hour[3]	 A 1/h	 10/**9**/8 47	 21/**19**/17 21	 27/**24**/21 20	 31/**28**/25 18
- Rated motor current I_M[2][4], starting time 8 s - Starts per hour[3]	A 1/h	10/**9**/8 34	21/**19**/17 15	27/**24**/21 14	31/**28**/25 13

[1] Measurement at 60 °C according to UL/CSA not required.

[2] With 300 % I_M.

[3] For intermittent duty S4 with ON period = 30 %, T_u = 40 °C, stand-alone installation vertical. The quoted switching frequencies do not apply for automatic mode.

[4] Maximum adjustable rated motor current I_M, dependent on CLASS setting.

Type		3RW40 36	3RW40 37	3RW40 38	3RW40 46	3RW40 47
Power electronics		40 °C/**50 °C**/60 °C				
Load rating with rated operational current I_e • Acc. to IEC and UL/CSA[1], for individual mounting at 40/50/60 °C, AC-53a	A	45/**42**/39	63/**58**/53	72/**63**/60	80/**73**/66	106/**98**/90
Smallest adjustable rated motor current I_M For the motor overload protection	A	23	26	35	43	46
Power loss • In operation after completed starting with uninterrupted rated operational current (40 °C) approx.	W	6	12	15	12	21
• During starting with 300 % I_M (40°C)	W	79	111	125	144	192
Permissible rated motor current and starts per hour						
• **Normal starting (Class 10)** - Rated motor current I_M[2], starting time 3 s	A	45/**42**/39	63/**58**/53	72/**63**/60	80/**73**/66	106/**98**/90
- Starts per hour[3]	1/h	38	23	22	22	15
- Rated motor current I_M[2)4)], starting time 4 s	A	45/**42**/39	63/**58**/53	72/**63**/60	80/**73**/66	106/**98**/90
- Starts per hour[3]	1/h	26	15	15	15	10
• **Normal starting (Class 15)** - Rated motor current I_M[2], starting time 4.5 s	A	42/**38**/34	50/**46**/42	56/**52**/46	70/**64**/58	84/**77**/70
- Starts per hour[3]	1/h	30	34	34	24	23
- Rated motor current I_M[2)4)], starting time 6 s	A	42/**38**/34	50/**46**/42	56/**52**/46	70/**64**/58	84/**77**/70
- Starts per hour[3]	1/h	21	24	24	16	17
• **Normal starting (Class 20)** - Rated motor current I_M[2], starting time 6 s	A	38/**34**/30	46/**42**/38	50/**46**/42	64/**58**/52	77/**70**/63
- Starts per hour[3]	1/h	30	31	34	23	23
- Rated motor current I_M[2)4)], starting time 8 s	A	38/**34**/30	46/**42**/38	50/**46**/42	64/**58**/52	77/**70**/63
- Starts per hour[3]	1/h	21	22	24	16	16

1) Measurement at 60 °C according to UL/CSA not required.

2) With 300 % I_M.

3) For intermittent duty S4 with ON period = 30 %, T_u = 40 °C, stand-alone installation vertical. The quoted switching frequencies do not apply for automatic mode.

4) Maximum adjustable rated motor current I_M, dependent on CLASS setting.

Type		3RW40 55	3RW40 56	3RW40 73	3RW40 74	3RW40 75	3RW40 76
Power electronics		40 °C/**50 °C**/60 °C					
Load rating with rated operational current I_e • Acc. to IEC and UL/CSA[1], for individual mounting at 40/50/60 °C, AC-53a	A	134/**117**/100	162/**145**/125	230/**205**/180	280/**248**/215	356/**315**/280	432/**385**/335
Smallest adjustable rated motor current I_M For the motor overload protection	A	59	87	80	130	131	207
Power loss • In operation after completed starting with uninterrupted rated operational current (40 °C) approx.	W	60	75	75	90	125	165
• During starting with 300 %[2] I_M (40°C)	W	1043	1355	2448	3257	3277	3600
Permissible rated motor current and starts per hour							
• **Normal starting (Class 10)** - Rated motor current I_M[2], starting time 10 s	A	134/**117**/100	162/**145**/125	230/**205**/180	280/**248**/215	356/**315**/280	432/**385**/335
- Starts per hour[3]	1/h	20	8	20	20	16	17
- Rated motor current I_M[2)4)], starting time 20 s	A	134/**117**/100	162/**145**/125	230/**205**/180	280/**248**/215	356/**315**/280	432/**385**/335
- Starts per hour[3]	1/h	7	1.4	9	8	5	5
• **Normal starting (Class 15)** - Rated motor current I_M[2], starting time 15 s	A	134/**117**/100	152/**140**/125	210/**200**/180	250/**220**/190	341/**315**/280	402/**385**/335
- Starts per hour[3]	1/h	11	8	11	13	11	12
- Rated motor current I_M[2)4)], starting time 30 s	A	134/**117**/100	152/**140**/125	210/**200**/180	250/**220**/190	341/**315**/280	402/**385**/335
- Starts per hour[3]	1/h	1.2	1.7	1	6	2	2
• **Normal starting (Class 20)** - Rated motor current I_M[2], starting time 20 s	A	124/**112**/100	142/**132**/120	200/**185**/168	230/**205**/180	311/**280**/250	372/**340**/305
- Starts per hour[3]	1/h	12	9	10	10	10	10
- Rated motor current I_M[2)4)], starting time 40 s	A	124/**112**/100	142/**132**/120	200/**185**/168	230/**205**/180	311/**280**/250	372/**340**/305
- Starts per hour[3]	1/h	3	3	1	5	1	1

1) Measurement at 60 °C according to UL/CSA not required.

2) With 300 % I_M.

3) For intermittent duty S4 with ON period = 30 %, T_u = 40 °C, stand-alone installation vertical. The quoted switching frequencies do not apply for automatic mode.

4) Maximum adjustable rated motor current I_M, dependent on CLASS setting.

Soft starters	Type		3RW40 2.	3RW40 3.	3RW40 4.
Conductor cross-sections					
Screw terminals	**Main conductors**				
Front clamping point connected NSB00479	• Solid	mm^2	2 x (1.5 ... 2.5); 2 x (2.5 ... 6) acc. to IEC 60947; max. 1 x 10	2 x (1.5 ... 16)	2 x (2.5 ... 16)
	• With end sleeve	mm^2	2 x (1.5 ... 2.5); 2 x (2.5 ... 6)	1 x (0.75 ... 25)	1 x (2.5 ... 35)
	• Stranded	mm^2	--	1 x (0.75 ... 35)	1 x (4 ... 70)
	• AWG cables				
	- Solid	AWG	2 x (16 ... 12)		
	- Solid or stranded	AWG	2 x (14 ... 10)	1 x (18 ... 2)	2 x (10 ... 1/0)
	- Stranded	AWG	1 x 8	--	--
Rear clamping point connected	• Solid	mm^2	--	2 x (1.5 ... 16)	2 x (2.5 ... 16)
	• With end sleeve	mm^2	--	1 x (1.5 ... 25)	1 x (2.5 ... 50)
NSB00480	• Stranded	mm^2	--	1 x (1.5 ... 35)	1 x (10 ... 70)
	• AWG cables				
	- Solid or stranded	AWG	--	1 x (16 ... 2)	2 x (10 ... 1/0)
Both clamping points connected	• Solid	mm^2	--	2 x (1.5 ... 16)	2 x (2.5 ... 16)
	• With end sleeve	mm^2	--	2 x (1.5 ... 16)	2 x (2.5 ... 35)
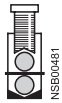 NSB00481	• Stranded	mm^2	--	2 x (1.5 ... 25)	2 x (10 ... 50)
	• AWG cables				
	- Solid or stranded	AWG	--	2 x (16 ... 2)	1 x (10 ... 2/0)
	• Tightening torque	NM lb.in	2 ... 2.5 18 ... 22	4.5 40	6.5 58
	Tools		PZ 2	PZ 2	Allen screw 4 mm
	Degree of protection		IP20	IP20 (IP00 terminal compartment)	IP20 (IP00 terminal compartment)
Spring-type terminals	**Main conductors**				
	• Solid	mm^2	1 ... 10	--	
	• Finely stranded with end sleeve	mm^2	1 ... 6 end sleeves without plastic collar	--	
	• AWG cables				
	- Solid or stranded (finely stranded)	AWG	16 ... 10	--	
	- Stranded	AWG	1 x 8	--	
	Tools		DIN ISO 2380-1A0; 5 x 3	--	
	Degree of protection		IP20	--	
Busbar connections	**Main conductors**				
	• With cable lug acc. to DIN 46234 or max. 20 mm wide				
	- Stranded	mm^2	--		2 x (10 ... 70)
	- Finely stranded	mm^2	--		2 x (10 ... 50)
	• AWG cables, solid or stranded	AWG	--		2 x (7 ... 1/0)

Soft starters	Type		3RW40 5.	3RW40 7.
Conductor cross-sections				
Screw terminals	**Main conductors**			
With box terminal			3RT19 55-4G (55 kW)	3RT19 66-4G
Front clamping point connected NSB00479	• Finely stranded with end sleeve	mm^2	16 ... 70	70 ... 240
	• Finely stranded without end sleeve	mm^2	16 ... 70	70 ... 240
	• Stranded	mm^2	16 ... 70	95 ... 300
	• Ribbon cable conductors (number x width x thickness)	mm	Min. 3 x 9 x 0.8 Max. 6 x 15.5 x 0.8	Min. 6 x 9 x 0.8 Max. 20 x 24 x 0.5
	• AWG cables, solid or stranded	AWG	6 ... 2/0	3/0 ... 600 kcmil
Rear clamping point connected NSB00480	• Finely stranded with end sleeve	mm^2	16 ... 70	120 ... 185
	• Finely stranded without end sleeve	mm^2	16 ... 70	120 ... 185
	• Stranded	mm^2	16 ... 70	120 ... 240
	• Ribbon cable conductors (number x width x thickness)	mm	Min. 3 x 9 x 0.8 Max. 6 x 15.5 x 0.8	Min. 6 x 9 x 0.8 Max. 20 x 24 x 0.5
	• AWG cables, solid or stranded	AWG	6 ... 2/0	250 ... 500 kcmil
Both clamping points connected 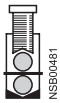 NSB00481	• Finely stranded with end sleeve	mm^2	Max. 1 x 50, 1 x 70	Min. 2 x 50; max. 2 x 185
	• Finely stranded without end sleeve	mm^2	Max. 1 x 50, 1 x 70	Min. 2 x 50; max. 2 x 185
	• Stranded	mm^2	Max. 2 x 70	Max. 2 x 70; max. 2 x 240
	• Ribbon cable conductors (number x width x thickness)	mm	Max. 2 x (6 x 15.5 x 0.8)	Max. 2 x (20 x 24 x 0.5)
	• AWG cables, solid or stranded	AWG	Max. 2 x 1/0	Min. 2 x 2/0 Max. 2 x 500 kcmil
	• Terminal screws - Tightening torque	 NM lb.in	M10 (hexagon socket, A/F4) 10 ... 12 90 ... 110	M12 (hexagon socket, A/F5) 20 ... 22 180 ... 195
Screw terminals	**Main conductors**			
With box terminal			3RT19 56-4G	
Front or rear clamping point connected NSB00479 NSB00480	• Finely stranded with end sleeve	mm^2	16 ... 120	
	• Finely stranded without end sleeve	mm^2	16 ... 120	
	• Stranded	mm^2	16 ... 120	
	• Ribbon cable conductors (number x width x thickness)	mm	Min. 3 x 9 x 0.8 Max. 6 x 15.5 x 0.8	
	• AWG cables, solid or stranded	AWG	6 ... 250 kcmil	
Both clamping points connected 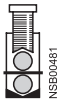 NSB00481	• Finely stranded with end sleeve	mm^2	Max. 1 x 95, 1 x 120	
	• Finely stranded without end sleeve	mm^2	Max. 1 x 95, 1 x 120	
	• Stranded	mm^2	Max. 2 x 120	
	• Ribbon cable conductors (number x width x thickness)	mm	Max. 2 x (10 x 15.5 x 0.8)	
	• AWG cables, solid or stranded	AWG	Max. 2 x 3/0	
Screw terminals	**Main conductors**			
	Without box terminal/busbar connection			
	• Finely stranded with cable lug	mm^2	16 ... 95[1)]	50 ... 240[2)]
	• Stranded with cable lug	mm^2	25 ... 120[1)]	70 ... 240[2)]
	• AWG cables, solid or stranded	AWG	4 ... 250 kcmil	2/0 ... 500 kcmil
	• Connecting bar (max. width)	mm	17	25
	• Terminal screws - Tightening torque	 NM lb.in	M8 x 25 (A/F13) 10 ... 14 89 ... 124	M10 x 30 (A/F17) 14 ... 24 124 ... 210

1) When connecting cable lugs to DIN 46235, use 3RT19 56-4EA1 terminal cover for conductor cross-sections from 95 mm^2 to ensure phase spacing.

2) When connecting cable lugs to DIN 46234, the 3RT19 66-4EA1 terminal cover must be used for cond. cross-sections of 240 mm^2 and more as well as DIN 46235 for cond. cross-sections of 185 mm^2 and more to keep the phase clearance.

Soft starters	Type		3RW40 . .
Conductor cross-sections			
Auxiliary conductors (1 or 2 conductors can be connected)**:**			
	Screw terminals		
	• Solid	mm^2	2 x (0.5 ... 2.5)
	• Finely stranded with end sleeve	mm^2	2 x (0.5 ... 1.5)
	• AWG cables - Solid or stranded - Finely stranded with end sleeve	 AWG AWG	 2 x (20 ... 14) 2 x (20 ... 16)
	• Terminal screws - Tightening torque	 NM lb.in	 0.8 ... 1.2 7 ... 10.3
	Spring-type terminals		
	• Solid - 3RW40 2. ... 3RW40 4. - 3RW40 5., 3RW40 7.	 mm^2 mm^2	 2 x (0.25 ... 2.5) 2 x (0.25 ... 1.5)
	• Finely stranded with end sleeve	mm^2	2 x (0.25 ... 1.5)
	• AWG cables, solid or stranded	AWG	2 x (24 ... 14) for 3RW40 2. ... 3RW40 4.; 2 x (24 ... 16) for 3RW40 5. and 3RW40 7.

	Standard	Parameters
Electromagnetic compatibility acc. to EN 60947-4-2		
EMC interference immunity		
Electrostatic discharge (ESD)	EN 61000-4-2	±4 kV contact discharge, ±8 kV air discharge
Electromagnetic RF fields	EN 61000-4-3	Frequency range: 80 ... 1000 MHz with 80 % at 1 kHz Degree of severity 3: 10 V/m
Conducted RF interference	EN 61000-4-6	Frequency range: 150 kHz ... 80 MHz with 80 % at 1 kHz Interference 10 V
RF voltages and RF currents on cables		
• Burst	EN 61000-4-4	±2 kV/5 kHz
• Surge	EN 61000-4-5	±1 kV line to line ±2 kV line to earth
EMC interference emission		
EMC interference field strength	EN 55011	Limit value of Class A at 30 ... 1000 MHz, limit value of Class B with 3RW40 2. 24 V AC/DC
Radio interference voltage	EN 55011	Limit value of Class A at 0.15 ... 30 MHz, limit value of Class B with 3RW40 2. 24 V AC/DC
Radio interference suppression filters		
Degree of noise suppression A (industrial applications)	Not required	
Degree of noise suppression B (applications for residential areas) Control voltage • 110 ... 230 V AC/DC • 115/230 V AC • 24 V AC/DC	 Not available[1)] Not available[1)] Not required for 3RW40 2.; required for 3RW40 3. and 3RW40 4. (see table)	

[1)] Degree of noise suppression B cannot be obtained through the use of filters as the strength of the electromagnetic field is not attenuated by the filter.

Soft starter type	Rated current	Recommended filters[1)]		
	Soft starters	Voltage range 200 ... 480 V		
		Filter type	Rated current filters	Terminals
	A		A	mm²
3RW40 36	45	4EF1512-1AA10	50	16
3RW40 37	63	4EF1512-2AA10	66	25
3RW40 38	72	4EF1512-3AA10	90	25
3RW40 46	80	4EF1512-3AA10	90	25
3RW40 47	106	4EF1512-4AA10	120	50

[1)] The radio interference suppression filter is used to remove the conducted interference from the main circuit. The field-related emissions comply with degree of noise suppression B. Filter selection applies under standard conditions: 10 starts per hour, start time 4 s at 300 % I_e.

Type Number	Max. Fuse Class K5, RK5, RK1	Max. Fuse Class J	Short Voltage Circuit	Voltage
Standard short circuit ratings 3RW40				
3RW40 24	50 A	60 A	5 kA	600 V
3RW40 26	100 A	100 A	5 kA	600 V
3RW40 27	125 A	125 A	5 kA	600 V
3RW40 28	125 A	125 A	5 kA	600 V
3RW40 36	175 A	175 A	10 kA	600 V
3RW40 37	250 A	250 A	10 kA	600 V
3RW40 38	250 A	250 A	10 kA	600 V
3RW40 46	450 A[1)]	300 A	10 kA	600 V
3RW40 47	450 A[1)]	350 A	10 kA	600 V

[1)] Special purpose fuse Type 3N81333-2 manufactured by Siemens covered in File E167357.

High capacity short circuit ratings 3RW40				
3RW40 24	50 A	50 A	42 kA	600 V
3RW40 26	60 A	100 A	42 kA	600 V
3RW40 27	60 A	125 A	42 kA	600 V
3RW40 28	60 A	125 A	42 kA	600 V
3RW40 36	100 A	175 A	30 kA	600 V
3RW40 37	100 A	200 A	30 kA	600 V
3RW40 38	100 A	200 A	30 kA	600 V
3RW40 46	110 A	200 A	42 kA	600 V
3RW40 47	110 A	200 A	42 kA	600 V

For solid-state motor controller, Type 3RW402: Applicable in an enclosure with minimum overall dimensions of 370 by 190 by 190 mm.
For solid-state motor controller, Type 3RW403: Applicable in an enclosure with minimum overall dimensions of 450 by 210 by 225 mm.
For solid-state motor controller, Type 3RW404: Applicable in an enclosure with minimum overall dimensions of 450 by 220 by 235 mm.

Circuit Breaker SCCR

ToC 1		Circuit Brakers																	
		Thermal Magnetic						Instantaneous Trip						Fuse					
Q11 Type	Rated current	480 V Type	SCCR kA	Max. size A	600 V Type	SCCR kA	Max. size A	480 V Type	SCCR kA	Max. size A	600 V Type	SCCR kA	Max. size A	600 V Type	SCCR kA	Max. size A	600 V Type	SCCR kA	Max. size A
3RW40 24	11																		
3RW40 26	23																		
3RW40 27	29																		
3RW40 28	34																		
3RW40 36	42																		
3RW40 37	58																		
3RW40 38	62																		
3RW40 46	73																		
3RW40 47	98																		
3RW40 55	117	FD63B	100	150	FD63B	50	150	FXD63A	100	150	FXD63A	50	150	RK5	100	200	J	100	400
3RW40 56	145	JD63B	100	200	JD63B	50	250	FXD63A	100	250	FXD63A	50	250	RK5	100	250	J	100	500
3RW40 73	205	JD63B	100	300	JD63B	50	300	JXD63A	100	300	JXD63A	50	300	RK5	100	250			
3RW40 74	248	JD63B	100	400	JD63B	50	400	JXD63A	100	400	JXD63A	50	400	RK5	100	450			
3RW40 75	315	LD63B	100	500	LD63B	50	450	JXD63A	100	400	JXD63A	50	400	RK5	100	600			
3RW40 76	385	LD63B	100	600	LD63B	50	600	LXD63H	100	600	LXD63H	50	600	L	100	700			

Fused version (line protection only)

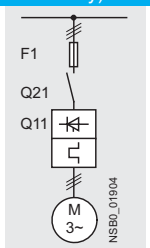

Soft starters ToC 1 Q11 Type	Rated current A	Line protection, maximum F1 Type	Rated current A	Size	Line contactors (optional) Q21
Type of coordination "1"[1]: I_q = 65 kA at 600 V +5 %					
3RW40 24	12.5	3NA3 820-6	50	00	3RT10 24
3RW40 26	25	3NA3 822-6	63	00	3RT10 26
3RW40 27	32	3NA3 824-6	80	00	3RT10 34
3RW40 28	38	3NA3 824-6	80	00	3RT10 35
3RW40 36	45	3NA3 130-6	100	1	3RT10 36
3RW40 37	63	3NA3 132-6	125	1	3RT10 44
3RW40 38	72	3NA3 132-6	125	1	3RT10 45
3RW40 46	80	3NA3 136-6	160	1	3RT10 45
3RW40 47	106	3NA3 136-6	160	1	3RT10 46
3RW40 55	134	3NA3 244-6	250	2	3RT10 55-6A.36
3RW40 56	162	3NA3 244-6	250	2	3RT10 56-6A.36
3RW40 73	230	2 x 3NA3 354-6	2 x 355	3	3RT10 65-6A.36
3RW40 74	280	2 x 3NA3 354-6	2 x 355	3	3RT10 66-6A.36
3RW40 75	356	2 x 3NA3 365-6	2 x 500	3	3RT10 75-6A.36
3RW40 76	432	2 x 3NA3 365-6	2 x 500	3	3RT10 76-6A.36

[1] The types of coordination are explained under "3RA1 Fuseless Load Feeders". The type of coordination "1" refers only to soft starters in combination with the stipulated protective device (motor starter protector/circuit breaker/fuse), not to any additional components in the feeder.

Fused version with 3NE1 SITOR fuses (semiconductor and line protection)

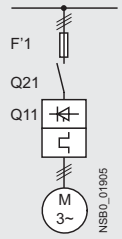

For matching fuse bases see Catalog LV 1 under "SENTRON Switching and Protection Devices for Power Distribution" —> "Switch Disconnectors", and Catalog ET B1 under "BETA Protecting" —> "SITOR Semiconductor Fuses" or go to www.siemens.com/sitor —>"Products" —>"BETA Protecting"—>"SITOR"

Soft starters		All-range fuses			Line contactors
ToC 2	Rated current		Rated current	Size	(optional)
Q11 Type	A	F'1 Type	A		Q21
Type of coordination "2"[1]: I_q = 65 kA at 600 V +5 %					
3RW40 24	12.5	3NE1 814-0	20	000	3RT10 24
3RW40 26	25	3NE1 803-0	35	000	3RT10 26
3RW40 27	32	3NE1 020-2	80	00	3RT10 34
3RW40 28	38	3NE1 020-2	80	00	3RT10 35
3RW40 36	45	3NE1 020-2	80	00	3RT10 36
3RW40 37	63	3NE1 820-0	80	000	3RT10 44
3RW40 38	72	3NE1 820-0	80	000	3RT10 45
3RW40 46	80	3NE1 021-0	100	00	3RT10 45
3RW40 47	106	3NE1 022-0	125	00	3RT10 46
3RW40 55	134	3NE1 227-2	250	1	3RT10 55-6A.36
3RW40 56	162	3NE1 227-2	250	1	3RT10 56-6A.36
3RW40 73	230	3NE1 331-2	350	2	3RT10 65-6A.36
3RW40 74	280	3NE1 333-2	450	2	3RT10 66-6A.36
3RW40 75	356	3NE1 334-2	500	2	3RT10 75-6A.36
3RW40 76	432	3NE1 435-2	560	3	3RT10 76-6A.36

[1] The types of coordination are explained in more detail under "3RA1 Fuseless Load Feeders".
The type of coordination "2" refers only to soft starters in combination with the stipulated protective device (circuit breaker/fuse), not to any additional components in the feeder.

ToC 1	Type of coordination "1"
ToC 2	Type of coordination "2"
	The types of coordination are explained in more detail under "3RA1 Fuseless Load Feeders".
	These types of coordination are indicated in the Technical specifications by gray backgrounds.

Fused version with 3NE3 SITOR fuses (semiconductor protection by fuse, line and overload protection by motor starter protector; alternatively, installation with contactor and overload relay possible)

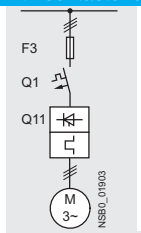

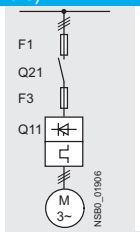

For matching fuse bases see Catalog LV 1 under "SENTRON Switching and Protection Devices for Power Distribution" —> "Switch Disconnectors", and Catalog ET B1 under "BETA Protecting" —> "SITOR Semiconductor Fuses" or go to rwww.siemens.com/sitor —>"Products" —>"BETA Protecting" —>"SITOR"

Soft starters		Semiconductor fuses, minimum			Semiconductor fuses, maximum			Semiconductor fuses, minimum		
ToC 2	Rated current		Rated current	Size		Rated current	Size		Rated current	Size
Q11 Type	A	F3 Type	A		F3 Type	A		F3 Type	A	
Type of coordination "2"[1]: I_q = 65 kA at 600 V +5 %										
3RW40 24	12.5	--	--	--	--	--	--	3NE4 101	32	0
3RW40 26	25	--	--	--	3NE3 221	100	1	3NE4 102	40	0
3RW40 27	32	--	--	--	3NE3 224	160	1	3NE4 118	63	0
3RW40 28	38	--	--	--	3NE3 224	160	1	3NE4 118	63	0
3RW40 36	45	--	--	--	3NE3 224	160	1	3NE4 120	80	0
3RW40 37	63	--	--	--	3NE3 225	200	1	3NE4 121	100	0
3RW40 38	72	3NE3 221	100	1	3NE3 227	250	1	--	--	--
3RW40 46	80	3NE3 222	125	1	3NE3 225	200	1	--	--	--
3RW40 47	106	3NE3 224	160	1	3NE3 231	350	1	--	--	--
3RW40 55	134	3NE3 227	250	1	3NE3 335	560	2	--	--	--
3RW40 56	162	3NE3 227	250	1	3NE3 335	560	2	--	--	--
3RW40 73	230	3NE3 232-0B	400	1	3NE3 333	450	2	--	--	--
3RW40 74	280	3NE3 233	450	1	3NE3 336	630	2	--	--	--
3RW40 75	356	3NE3 335	560	2	3NE3 336	630	2	--	--	--
3RW40 76	432	3NE3 337-8	710	2	3NE3 340-8	900	2	--	--	--

Soft starters		Semiconductor fuses max.			Semiconductor fuses min.			Semiconductor fuses max.			Cylindrical fuses	
ToC 2	Rated current		Rated current	Size		Rated current	Size		Rated current	Size		Rated current
Q11 Type	A	F3 Type	A		F3 Type	A		F3 Type	A		F3 Type	A
Type of coordination "2"[1]: I_q = 65 kA at 600 V +5 %												
3RW40 24	12.5	3NE4 117	50	0	3NE8 015-1	25	00	3NE8 017-1	50	00	3NC2 240	40
3RW40 26	25	3NE4 117	50	0	3NE8 017-1	50	00	3NE8 021-1	100	00	3NC2 263	63
3RW40 27	32	3NE4 118	63	0	3NE8 018-1	63	00	3NE8 022-1	125	00	3NC2 280	80
3RW40 28	38	3NE4 118	63	0	3NE8 020-1	80	00	3NE8 024-1	160	00	3NC2 280	80
3RW40 36	45	3NE4 120	80	0	3NE8 020-1	80	00	3NE8 024-1	160	00	3NC2 280	80
3RW40 37	63	3NE4 121	100	0	3NE8 021-1	100	00	3NE8 024-1	160	00	--	--
3RW40 38	72	--	--	--	3NE8 022-1	125	00	3NE8 024-1	160	00	--	--
3RW40 46	80	--	--	--	3NE8 022-1	125	00	3NE8 024-1	160	00	--	--
3RW40 47	106	--	--	--	3NE8 024-1	160	00	3NE8 024-1	160	00	--	--
3RW40 55	134	--	--	--	--	--	--	--	--	--	--	--
3RW40 56	162	--	--	--	--	--	--	--	--	--	--	--
3RW40 73	230	--	--	--	--	--	--	--	--	--	--	--
3RW40 74	280	--	--	--	--	--	--	--	--	--	--	--
3RW40 75	356	--	--	--	--	--	--	--	--	--	--	--
3RW40 76	432	--	--	--	--	--	--	--	--	--	--	--

Soft starters		Line contactors	Motor starter protectors/circuit breakers				Line protection, maximum		
ToC 2	Rated current	(optional)	400 V +10 %	Rated current	575 V +10 %	Rated current		Rated current	Size
Q11 Type	A	Q21	Q1 Type	A	Q1 Type	A	F1 Type	A	
Type of coordination "2"[1]: I_q = 65 kA at 600 V +5 %									
3RW40 24	12.5	3RT10 24	3RV1 021-4KA10	55	--	--	3NA3 820-6	50	00
3RW40 26	25	3RT10 26	3RV1 021-4DA10	55	--	--	3NA3 822-6	63	00
3RW40 27	32	3RT10 34	3RV1 031-4EA10	55	--	--	3NA3 824-6	80	00
3RW40 28	38	3RT10 35	3RV1 031-4FA10	55	--	--	3NA3 824-6	80	00
3RW40 36	45	3RT10 36	3RV1 031-4GA10	20	--	--	3NA3 130-6	100	1
3RW40 37	63	3RT10 44	3RV1 041-4JA10	20	--	--	3NA3 132-6	125	1
3RW40 38	72	3RT10 45	3RV1 041-4KA10	20	--	--	3NA3 132-6	125	1
3RW40 46	80	3RT10 45	3RV1 041-4LA10	11	--	--	3NA3 136-6	160	1
3RW40 47	106	3RT10 46	3RV1 041-4MA10	11	--	--	3NA3 136-6	160	1
3RW40 55	134	3RT10 55-6A.36	3VL3 720	200	3VL3 720	200	3NA3 244-6	250	2
3RW40 56	162	3RT10 56-6A.36	3VL3 720	200	3VL3 720	200	3NA3 244-6	250	2
3RW40 73	230	3RT10 65-6A.36	3VL4 731	315	3VL5 731	315	2 x 3NA3 354-6	2 x 355	3
3RW40 74	280	3RT10 66-6A.36	3VL4 731	315	3VL5 731	315	2 x 3NA3 354-6	2 x 355	3
3RW40 75	356	3RT10 75-6A.36	3VL4 740	400	3VL5 740	400	2 x 3NA3 365-6	2 x 500	3
3RW40 76	432	3RT10 76-6A.36	3VL5 750	500	3VL5 750	500	2 x 3NA3 365-6	2 x 500	3

[1] The types of coordination are explained under "3RA1 Fuseless Load Feeders". The type of coordination "2" refers only to soft starters in combination with the stipulated protective device (motor starter protector/circuit breaker/fuse), not to any additional components in the feeder.

Characteristic curves

Motor protection tripping characteristics for 3RW40 (with symmetry)

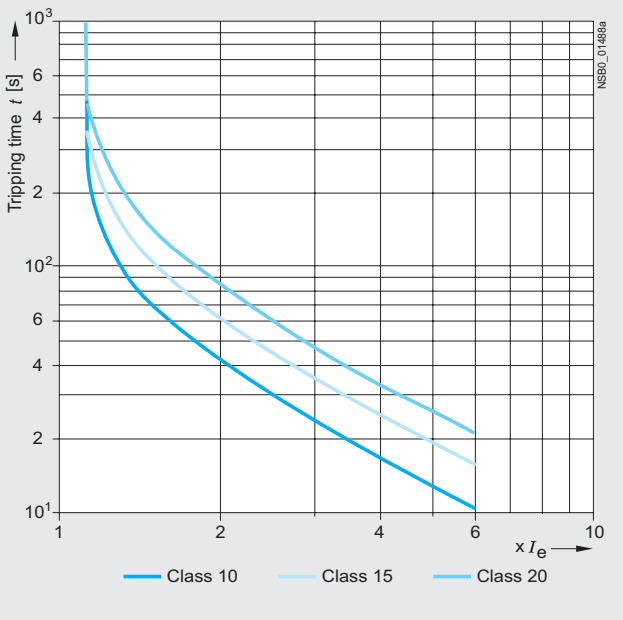

Motor protection tripping characteristics for 3RW40 (with asymmetry)

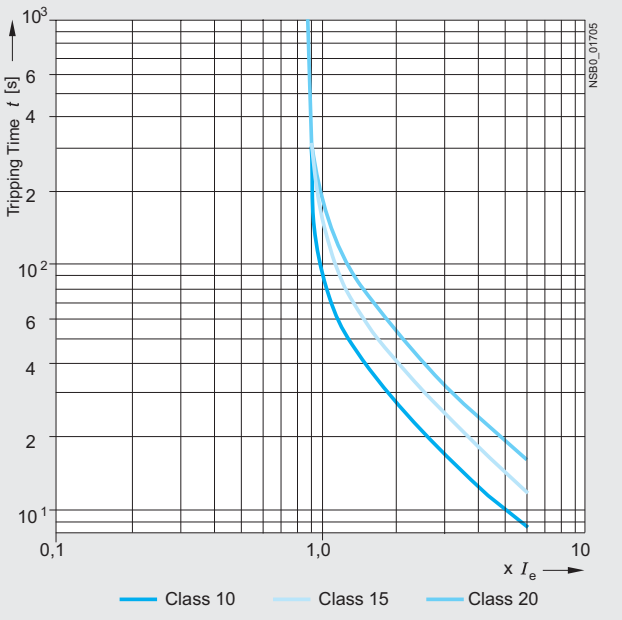

Permissible installation height

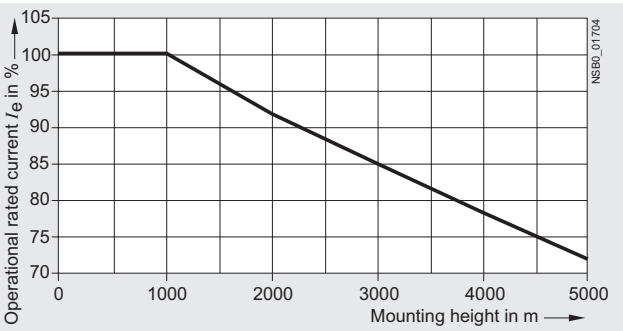

At an installation height above 2000 m, the max. permissible operational voltage is reduced to 460 V.

More information

Application examples for normal starting (Class 10)

Normal starting Class 10 (up to 20 s with 350 % $I_{n\ motor}$),
The soft starter rating can be selected to be as high as the rating of the motor used.

Application		Conveyor belt	Roller conveyor	Small fan	Pump	Hydraulic pump
Starting parameters						
• Voltage ramp and current limiting						
- Starting voltage	%	70	60	40	40	40
- Starting time	s	10	10	10	10	10
- Current limit value		5 x I_M	5 x I_M	4 x I_M	4 x I_M	4 x I_M
Ramp-down time	s	5	5	0	10	0

Application examples for heavy starting (Class 20)

Heavy starting Class 20 (up to 40 s with 350 % $I_{n\ motor}$),
The soft starter has to be selected at least one performance class higher than the motor used.

Application		Stirrer	Compressor	Centrifuge
Starting parameters				
• Voltage ramp and current limiting				
- Starting voltage	%	40	50	40
- Starting time	s	20	10	20
- Current limit value		4 x I_M	4 x I_M	4 x I_M
Ramp-down time		0	0	0

Note:
These tables present sample set values and device sizes. They are intended only for the purposes of information and are not binding. The set values depend on the application in question and must be optimized during commissioning.
The soft starter dimensions should be checked where necessary with the Win-Soft Starter software or with the help of Technical Assistance.

Configuration

The 3RW solid-state soft starters are designed for easy starting conditions. In the event of deviating conditions or increased switching frequency, it may be necessary to choose a larger device. For accurate dimensioning, use the Win-Soft Starter selection and simulation program.

Where long starting times are involved, the integrated solid-state overload relay for heavy starting should not be disconnected. PTC sensors are recommended. This also applies for the smooth ramp-down because during the ramp-down time an additional current loading applies in contrast to free ramp-down.

In the case of high switching frequencies in S4 mode, Siemens recommends the use of PTC sensors. For corresponding device versions with integrated thermistor motor protection or separate thermistor evaluation devices see Catalog LV 1.

In the motor feeder between the SIRIUS 3RW soft starter and the motor, no capacitive elements are permitted (e. g. no reactive-power compensation equipment). In addition, neither static systems for reactive-power compensation nor dynamic PFC (Power Factor Correction) must be operated in parallel during starting and ramp-down of the soft starter. This is important to prevent faults arising on the compensation equipment and/or the soft starter.

All elements of the main circuit (such as fuses and controls) should be dimensioned for direct starting, following the local short-circuit conditions. Fuses, controls and overload relays must be ordered separately. Please observe the maximum switching frequencies specified in the technical specifications.

Note:
When induction motors are switched on, voltage drops occur as a rule on starters of all types (direct starters, wye-delta starters, soft starters). The infeed transformer must always be dimensioned such that the voltage dip when starting the motor remains within the permissible tolerance. If the infeed transformer is dimensioned with only a small margin, it is best for the control voltage to be supplied from a separate circuit (independently of the main voltage) in order to avoid the potential switching off of the soft starter.

Schematic circuit diagram

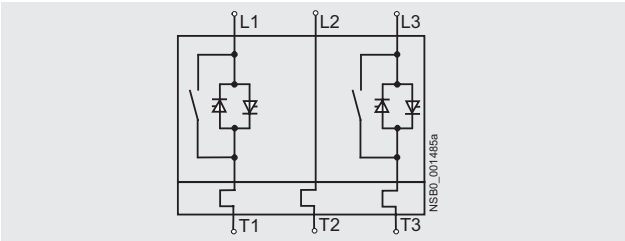

A bypass contact system and solid-state overload relay are already integrated in the 3RW40 soft starter and therefore do not have to be ordered separately.

Status graphs

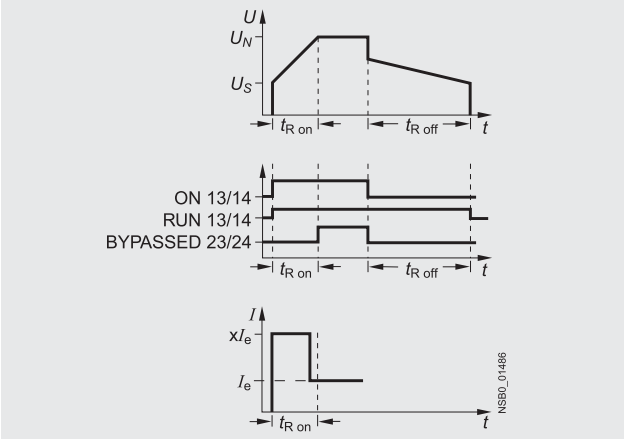

Win-Soft Starter selection and simulation program

With this software, you can simulate and select all Siemens soft starters, taking into account various parameters such as mains properties, motor and load data, and special application requirements.

The software is a valuable tool, which makes complicated, lengthy manual calculations for determining the required soft starters superfluous.

The Win-Soft Starter selection and simulation program can be downloaded from:
www.usa.siemens.com > Software

More information can be found on the Internet at:
www.usa.siemens.com.

Overview

In addition to soft starting and soft ramp-down, the solid-state SIRIUS 3RW44 soft starters provide numerous functions for higher-level requirements. They cover a performance range up to 900 Hp (at 460 V) in the inline circuit and up to 1600 Hp (at 460 V) in the inside-delta circuit.

The SIRIUS 3RW44 soft starters are characterized by a compact design for space-saving and clearly arranged control cabinet layouts. For optimized motor starting and stopping the innovative SIRIUS 3RW44 soft starters are an attractive alternative with considerable savings potential compared to applications with a frequency converter. The new torque control and adjustable current limiting enable the High-Feature soft starters to be used in nearly every conceivable task. They reliably mitagate the sudden torque applications and current peaks during motor starting and stopping. This creates savings potential when calculating the size of the controlgear and when servicing the machinery installed. Be it for inline circuits or inside-delta circuits – the SIRIUS 3RW44 soft starter offers savings especially in terms of size and equipment costs.

The bypass contacts already integrated in the soft starter bypass the thyristors after a motor ramp-up is detected. This results in a further great reduction in the heat loss occuring during operation of the soft starter at rated value.

Combinations of various starting, operating and ramp-down possibilities ensure an optimum adaptation to the application-specific requirements. Operation and commissioning can be performed with the menu-controlled keypad and a menu-prompted, multi-line graphic display with background lighting. The optimized motor ramp-up and ramp-down can be effected quickly, easily and reliably by means of just a few settings with a previously selected language. Four-key operation and plain-text displays for each menu point guarantee full clarity at every moment of the parameterization and operation.

Applicable standards

- IEC 60947-4-2
- UL/CSA

Soft Starter ES parameterization software

Soft Starter ES software is used for the parameterization, monitoring and service diagnostics of SIRIUS 3RW44 High Feature soft starters.
See Catalog LV 1, Chapter 12 "Planning and Configuration with SIRIUS".

Function

Equipped with modern, ergonomic user prompting the SIRIUS 3RW44 soft starters can be commissioned quickly and easily using a keypad and a menu-prompted, multi-line graphic display with background lighting. The optimized motor ramp-up and ramp-down can be effected quickly, easily and reliably by means of just a few settings with a selectable language. Four-key operation and plain-text displays for each menu point guarantee full clarity at every moment of the parameterization and operation. During operation and when control voltage is applied, the display field continuously presents measured values and operating values as well as warnings and fault messages. An external display and operator module can be connected by means of a connection cable to the soft starter, thus enabling active indications and the like to be read directly from the control cabinet door.

The SIRIUS 3RW44 soft starters are equipped with optimum functionality. An integral bypass contact system reduces the power loss of the soft starter during operation.
This reliably prevents heating of the switchgear environment.
The SIRIUS 3RW44 soft starters have internal intrinsic device protection. This prevents thermal overloading of the power section's thyristors, e. g. due to unacceptably high closing operations.

Wiring outlay for installing an additional motor overload relay is no longer needed as the SIRIUS 3RW44 soft starters perform this function too. In addition they offer adjustable trip classes and a thermistor motor protection function. As an option the thyristors can also be protected by SITOR semiconductor fuses from short-circuiting so that the soft starter is still functional after a short-circuit (type of coordination 2). And even inrush current peaks are reliably avoided thanks to adjustable current limiting.

As a further option the SIRIUS 3RW44 soft starters can be upgraded with a PROFIBUS DP module. Thanks to their communication capability and their programmable control inputs and relay outputs the SIRIUS 3RW44 soft starters can be very easily and quickly integrated in higher-level controllers.

In addition a creep speed function is available for positioning and setting jobs. With this function the motor can be controlled in both directions of rotation with reduced torque and an adjustable, low speed.

On the other hand the SIRIUS 3RW44 soft starters offer a new, combined DC braking function for the fast stopping of driving loads.

Highlights

- Soft starting with breakaway pulse, torque control or voltage ramp, adjustable torque or current limiting as well as any combination of these, depending on load type
- Integrated bypass contact system to minimize power loss
- Various setting options for the starting parameters such as starting torque, starting voltage, ramp-up and ramp-down time, and much more in three separate parameter sets
- Start-up detection
- Inside-delta circuit for savings in terms of size and equipment costs
- Various ramp-down modes selectable: free ramp-down, torque-controlled pump ramp-down, combined DC braking
- Solid-state motor overload and intrinsic device protection
- Thermistor motor protection
- Keypad with a menu-prompted, multi-line graphic display with background lighting
- Interface for communication with the PC for more accurate setting of the parameters as well as for control and monitoring
- Simple adaptation to the motor feeder
- Simple mounting and commissioning
- Display of operating states and fault messages
- Connection to PROFIBUS with optional PROFIBUS DP module
- External display and operator module
- Mains voltages from 200 to 690 V, 50 to 60 Hz
- Applicable up to 60 °C (derating from 40 °C)

Type		3RW44 ..-.BC.4	3RW44 ..-.BC.5	3RW44 ..-.BC.6
Power electronics				
Rated operational voltage for inline circuit Tolerance	V AC %	200 ... 460 -15/+10	400 ... 600 -15/+10	400 ... 690 -15/+10
Maximum blocking voltage (thyristor)	V AC	1400	1800	1800
Rated operational voltage for inside-delta circuit Tolerance	V AC %	200 ... 460 -15/+10	400 ... 600 -15/+10	400 ... 600 -15/+10
Rated frequency Tolerance	Hz %	50 ... 60 ±10		
Uninterrupted duty at 40 °C (% of I_e)	%	115		
Minimum load (% of set motor current I_M)	%	8		
Maximum cable length between soft starter and motor	m	500[1]		
Permissible installation height	m	5000 (derating from 1000, see characteristic curves); higher on request		
Permissible mounting position		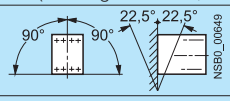		
Installation type		Stand-alone installation 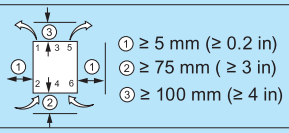		
Permissible ambient temperature Operation Storage	 °C °C	 0 ... +60; (derating from +40) -25 ... +80		
Degree of protection		IP00		

1) At the project configuration stage, it is important to make allowance for the voltage drop on the motor cable up to the motor connection. If necessary, higher values for the rated operational voltage or current must be calculated accordingly for the soft starter.

Type		3RW44 22	3RW44 23	3RW44 24	3RW44 25	3RW44 26	3RW44 27
Power electronics		40 °C/**50 °C**/60 °C					
Load rating with rated operational current I_e • Acc. to IEC and UL/CSA[1], for individual mounting at 40/50/60 °C, AC-53a	A	29/**26**/23	36/**33**/29	47/**42**/37	57/**51**/45	77/**68**/59	93/**82**/72
Smallest adjustable rated motor current I_M For the motor overload protection	A	5	7	9	11	15	18
Power loss • In operation after completed starting with uninterrupted rated operational current (40 °C) approx. • During starting with 300 % I_M (40 °C)	 W W	 8 400	 10 470	 32 600	 36 725	 45 940	 55 1160
Permissible rated motor current and starts per hour							
• **Normal starting (Class 5)**							
- Rated motor current I_M[2], starting time 5 s	A	29/**26**/23	36/**33**/29	47/**42**/37	57/**51**/45	77/**68**/59	93/**82**/72
- Starts per hour[3]	1/h	41	34	41	42	43	44
- Rated motor current I_M[2)4)], starting time 10 s	A	29/**26**/23	36/**33**/29	47/**42**/37	57/**51**/45	77/**68**/59	93/**82**/72
- Starts per hour[3]	1/h	20	15	20	20	20	20
• **Normal starting (Class 10)**							
- Rated motor current I_M[2], starting time 10 s	A	29/**26**/23	36/**33**/29	47/**42**/37	57/**51**/45	77/**68**/59	93/**82**/72
- Starts per hour[3]	1/h	20	15	20	20	20	20
- Rated motor current I_M[2)4)], starting time 20 s	A	29/**26**/23	36/**33**/29	47/**42**/37	57/**51**/45	77/**68**/59	93/**82**/72
- Starts per hour[3]	1/h	10	6	10	10	8	8
• **Normal starting (Class 15)**							
- Rated motor current I_M[2], starting time 15 s	A	29/**26**/23	36/**33**/29	47/**42**/37	57/**51**/45	77/**68**/59	93/**82**/72
- Starts per hour[3]	1/h	13	9	13	13	13	13
- Rated motor current I_M[2)4)], starting time 30 s	A	29/**26**/23	36/**33**/29	47/**42**/37	57/**51**/45	77/**68**/59	93/**82**/72
- Starts per hour[3]	1/h	6	4	6	6	6	6
• **Normal starting (Class 20)**							
- Rated motor current I_M[2], starting time 20 s	A	29/**26**/23	36/**33**/29	47/**42**/37	57/**51**/45	73/**66**/59	88/**80**/72
- Starts per hour[3]	1/h	10	6	10	10	10	10
- Rated motor current I_M[2)4)], starting time 30 s	A	29/**26**/23	36/**33**/29	47/**42**/37	57/**51**/45	73/**66**/59	88/**80**/72
- Starts per hour[3]	1/h	4	2	4	5	1.8	0.8
• **For very heavy starting (Class 30)**							
- Rated motor current I_M[2], starting time 30 s	A	29/**26**/23	36/**33**/29	44/**42**/37	57/**51**/45	65/**60**/54	77/**70**/63
- Starts per hour[3]	1/h	6	4	6	6	6	6
- Rated motor current I_M[2)3)], starting time 60 s	A	29/**26**/23	36/**33**/29	44/**42**/37	57/**51**/45	65/**60**/54	77/**70**/63
- Starts per hour[3]	1/h	1.8	0.8	3.3	1.5	2	1

1) Measurement at 60 °C according to UL/CSA not required.

2) With 300 % I_M.

3) For intermittent duty S4 with ON period = 30 %, T_u = 40 °C, stand-alone installation vertical. The quoted switching frequencies do not apply for automatic mode.

4) Maximum adjustable rated motor current I_M, dependent on CLASS setting.

Type		3RW44 34	3RW44 35	3RW44 36
Power electronics		40 °C/**50 °C**/60 °C		
Load rating with rated operational current I_e • Acc. to IEC and UL/CSA[1], for individual mounting at 40/50/60 °C, AC-53a	A	113/**100**/88	134/**117**/100	162/**145**/125
Smallest adjustable rated motor current I_M For the motor overload protection	A	22	26	32
Power loss				
• In operation after completed starting with uninterrupted rated operational current (40 °C) approx.	W	64	76	95
• During starting with 300 % I_M (40 °C)	W	1350	1700	2460
Permissible rated motor current and starts per hour				
• **Normal starting (Class 5)**				
- Rated motor current I_M[2], starting time 5 s	A	113/**100**/88	134/**117**/100	162/**145**/125
- Starts per hour[3]	1/h	41	39	41
- Rated motor current I_M[2][4], starting time 10 s	A	113/**100**/88	134/**117**/100	162/**145**/125
- Starts per hour[3]	1/h	20	15	20
• **Normal starting (Class 10)**				
- Rated motor current I_M[2], starting time 10 s	A	113/**100**/88	134/**117**/100	162/**145**/125
- Starts per hour[3]	1/h	20	15	20
- Rated motor current I_M[2][4], starting time 20 s	A	113/**100**/88	134/**117**/100	162/**145**/125
- Starts per hour[3]	1/h	9	6	7
• **Normal starting (Class 15)**				
- Rated motor current I_M[2], starting time 15 s	A	113/**100**/88	134/**117**/100	162/**145**/125
- Starts per hour[3]	1/h	13	9	12
- Rated motor current I_M[2][4], starting time 30 s	A	113/**100**/88	134/**117**/100	162/**145**/125
- Starts per hour[3]	1/h	6	6	1
• **Normal starting (Class 20)**				
- Rated motor current I_M[2], starting time 20 s	A	106/**97**/88	125/**113**/100	147/**134**/122
- Starts per hour[3]	1/h	9	9	10
- Rated motor current I_M[2][4], starting time 30 s	A	106/**97**/88	125/**113**/100	147/**134**/122
- Starts per hour[3]	1/h	1.5	2	1
• **For very heavy starting (Class 30)**				
- Rated motor current I_M[2], starting time 30 s	A	91/**84**/76	110/**100**/90	120/**110**/100
- Starts per hour[3]	1/h	6	6	6
- Rated motor current I_M[2][4], starting time 60 s	A	91/**84**/76	110/**100**/90	120/**110**/100
- Starts per hour[3]	1/h	2	2	2

1) Measurement at 60 °C according to UL/CSA not required.

2) With 300 % I_M.

3) For intermittent duty S4 with ON period = 30 %, T_u = 40 °C, stand-alone installation vertical. The quoted switching frequencies do not apply for automatic mode.

4) Maximum adjustable rated motor current I_M, dependent on CLASS setting.

Type		3RW44 43	3RW44 44	3RW44 45	3RW44 46	3RW44 47
Power electronics		40 °C/**50 °C**/60 °C				
Load rating with rated operational current I_e • Acc. to IEC and UL/CSA[1], for individual mounting at 40/50/60 °C, AC-53a	A	203/**180**/156	250/**215**/185	313/**280**/250	356/**315**/280	432/**385**/335
Smallest adjustable rated motor current I_M For the motor overload protection	A	40	50	62	71	86
Power loss • In operation after completed starting with uninterrupted rated operational current (40 °C) approx. • During starting with 300 % I_M (40 °C)	 W W	 89 3350	 110 4000	 145 4470	 174 5350	 232 5860
Permissible rated motor current and starts per hour						
• **Normal starting (Class 5)**						
- Rated motor current I_M[2], starting time 5 s	A	203/**180**/156	250/**215**/185	313/**280**/250	356/**315**/280	432/**385**/335
- Starts per hour[3]	1/h	41	41	41	41	39
- Rated motor current I_M[2)4)], starting time 10 s	A	203/**180**/156	250/**215**/185	313/**280**/250	356/**315**/280	432/**385**/335
- Starts per hour[3]	1/h	20	20	19	17	16
• **Normal starting (Class 10)**						
- Rated motor current I_M[2], starting time 10 s	A	203/**180**/156	250/**215**/185	313/**280**/250	356/**315**/280	432/**385**/335
- Starts per hour[3]	1/h	20	20	19	17	16
- Rated motor current I_M[2)4)], starting time 20 s	A	203/**180**/156	250/**215**/185	313/**280**/250	356/**315**/280	432/**385**/335
- Starts per hour[3]	1/h	9	10	6	4	5
• **Normal starting (Class 15)**						
- Rated motor current I_M[2], starting time 15 s	A	203/**180**/156	240/**215**/185	313/**280**/250	325/**295**/265	402/**385**/335
- Starts per hour[3]	1/h	13	13	10	13	11
- Rated motor current I_M[2)4)], starting time 30 s	A	203/**180**/156	240/**215**/185	313/**280**/250	325/**295**/265	402/**385**/335
- Starts per hour[3]	1/h	3	6	1	2	1
• **Normal starting (Class 20)**						
- Rated motor current I_M[2], starting time 20 s	A	195/**175**/155	215/**195**/180	275/**243**/221	285/**263**/240	356/**326**/295
- Starts per hour[3]	1/h	10	10	10	10	10
- Rated motor current I_M[2)4)], starting time 30 s	A	195/**175**/155	215/**195**/180	275/**243**/221	285/**263**/240	356/**326**/295
- Rtarts per hour[3]	1/h	1	5	1	3	1
• **For very heavy starting (Class 30)**						
- Rated motor current I_M[2], starting time 30 s	A	162/**148**/134	180/**165**/150	220/**201**/182	240/**223**/202	285/**260**/235
- Starts per hour[3]	1/h	6	6	6	6	6
- Rated motor current I_M[2)4)], starting time 60 s	A	162/**148**/134	180/**165**/150	220/**201**/182	240/**223**/202	285/**260**/235
- Starts per hour[3]	1/h	3	3	3	2	1

1) Measurement at 60 °C according to UL/CSA not required.

2) With 300 % I_M.

3) For intermittent duty S4 with ON period = 30 %, T_u = 40 °C, stand-alone installation vertical. The quoted switching frequencies do not apply for automatic mode.

4) Maximum adjustable rated motor current I_M, dependent on CLASS setting.

Type		3RW44 53	3RW44 54	3RW44 55	3RW44 56	3RW44 57	3RW44 58
Power electronics		40 °C/**50 °C**/60 °C					
Load rating with rated operational current I_e • Acc. to IEC and UL/CSA[1], for individual mounting at 40/50/60 °C, AC-53a	A	551/**494**/438	615/**551**/489	693/**615**/551	780/**693**/615	880/**780**/693	970/**850**/760
Smallest adjustable rated motor current I_M For the motor overload protection	A	110	123	138	156	176	194
Power loss • In operation after completed starting with uninterrupted rated operational current (40 °C) approx.	W	159	186	220	214	250	270
• During starting with 300 % I_M (40 °C)	W	7020	8100	9500	11100	13100	15000
Permissible rated motor current and starts per hour							
• **Normal starting (Class 5)**							
- Rated motor current I_M[2], starting time 5 s	A	551/**494**/438	615/**551**/489	693/**615**/551	780/**693**/615	880/**780**/693	970/**850**/760
- Starts per hour[3]	1/h	41	41	37	33	22	17
- Rated motor current I_M[2)4)], starting time 10 s	A	551/**494**/438	615/**551**/489	693/**615**/551	780/**693**/615	880/**780**/693	970/**850**/760
- Starts per hour[3]	1/h	20	20	16	13	8	5
• **Normal starting (Class 10)**							
- Rated motor current I_M[2], starting time 10 s	A	551/**494**/438	615/**551**/489	693/**615**/551	780/**693**/615	880/**780**/693	970/**850**/760
- Starts per hour[3]	1/h	20	20	16	13	8	5
- Rated motor current I_M[2)4)], starting time 20 s	A	551/**494**/438	615/**551**/489	693/**615**/551	780/**693**/615	880/**780**/693	970/**850**/760
- Starts per hour[3]	1/h	10	9	6	4	0.3	0.3
• **Normal starting (Class 15)**							
- Rated motor current I_M[2], starting time 15 s	A	551/**494**/438	615/**551**/489	666/**615**/551	723/**693**/615	780/**710**/650	821/**755**/693
- Starts per hour[3]	1/h	13	13	11	9	8	8
- Rated motor current I_M[2)4)], starting time 30 s	A	551/**494**/438	615/**551**/489	666/**615**/551	723/**693**/615	780/**710**/650	821/**755**/693
- Starts per hour[3]	1/h	6	4	3	1	0.4	0.5
• **Normal starting (Class 20)**							
- Rated motor current I_M[2], starting time 20 s	A	551/**494**/438	591/**551**/489	633/**615**/551	670/**634**/576	710/**650**/590	740/**685**/630
- Starts per hour[3]	1/h	10	10	7	8	8	9
- Rated motor current I_M[2)4)], starting time 30 s	A	551/**494**/438	591/**551**/489	633/**615**/551	670/**634**/576	710/**650**/590	740/**685**/630
- Starts per hour[3]	1/h	4	2	1	1	0.4	1
• **For very heavy starting (Class 30)**							
- Rated motor current I_M[2], starting time 30 s	A	500/**480**/438	525/**489**/455	551/**520**/480	575/**540**/490	600/**550**/500	630/**580**/530
- Starts per hour[3]	1/h	6	6	6	6	6	6
- Rated motor current I_M[2)4)], starting time 60 s	A	500/**480**/438	525/**489**/455	551/**520**/480	575/**540**/490	600/**550**/500	630/**580**/530
- Starts per hour[3]	1/h	2	1	1	1	1.5	1

1) Measurement at 60 °C according to UL/CSA not required.

2) With 300 % I_M.

3) For intermittent duty S4 with ON period = 30 %, T_u = 40 °C, stand-alone installation vertical. The quoted switching frequencies do not apply for automatic mode.

4) Maximum adjustable rated motor current I_M, dependent on CLASS setting.

Type		3RW44 65	3RW44 66
Power electronics		40 °C/**50 °C**/60 °C	
Load rating with rated operational current I_e • Acc. to IEC and UL/CSA[1], for individual mounting at 40/50/60 °C, AC-53a	A	1076/**970**/880	1214/**1076**/970
Smallest adjustable rated motor current I_M For the motor overload protection	A	215	242
Power loss			
• In operation after completed starting with uninterrupted rated operational current (40 °C) approx.	W	510	630
• During starting with 300 % I_M (40 °C)	W	15000	17500
Permissible rated motor current and starts per hour			
• **Normal starting (Class 5)**			
- Rated motor current I_M[2], starting time 5 s	A	1076/**970**/880	1214/**1076**/970
- Starts per hour[3]	1/h	30	20
- Rated motor current I_M[2][4], starting time 10 s	A	1076/**970**/880	1214/**1076**/970
- Starts per hour[3]	1/h	10	6
• **Normal starting (Class 10)**			
- Rated motor current I_M[2], starting time 10 s	A	1076/**970**/880	1214/**1076**/970
- Starts per hour[3]	1/h	11	6
- Rated motor current I_M[2][4], starting time 20 s	A	1076/**970**/880	1214/**1076**/970
- Starts per hour[3]	1/h	3	0.5
• **Normal starting (Class 15)**			
- Rated motor current I_M[2], starting time 15 s	A	1020/**950**/850	1090/**1000**/920
- Starts per hour[3]	1/h	7	5
- Rated motor current I_M[2][4], starting time 30 s	A	1020/**950**/850	1090/**1000**/920
- Starts per hour[3]	1/h	1	1
• **Normal starting (Class 20)**			
- Rated motor current I_M[2], starting time 20 s	A	970/**880**/810	1030/**940**/860
- Starts per hour[3]	1/h	7	5
- Rated motor current I_M[2][4], starting time 30 s	A	970/**880**/810	1030/**940**/860
- Starts per hour[3]	1/h	1	1
• **For very heavy starting (Class 30)**			
- Rated motor current I_M[2], starting time 30 s	A	880/**810**/740	920/**850**/780
- Starts per hour[3]	1/h	6	6
- Rated motor current I_M[2][4], starting time 60 s	A	880/**810**/740	920/**850**/780
- Starts per hour[3]	1/h	1	1

1) Measurement at 60 °C according to UL/CSA not required.

2) With 300 % I_M.

3) For intermittent duty S4 with ON period = 30 %, T_u = 40 °C, stand-alone installation vertical. The quoted switching frequencies do not apply for automatic mode.

4) Maximum adjustable rated motor current I_M, dependent on CLASS setting.

3RW44 27-1BC44

3RW44 36-6BC44

3RW44 47-6BC44

3RW44 58-6BC44

3RW44 66-6BC44

Ambient temperature 40 °C						Ambient temperature 50 °C					DT	Order No.	List Price $ per PU	PU (UNIT, SET, M)	PS*	PG	Weight per PU approx.
Rated operational current I_e 1)	Rated power of induction motors for rated operational voltage U_e					Rated operational current I_e	Rated power of induction motors for rated operational voltage U_e										
	230 V	400 V	500 V	690 V	1000 V		200 V	230 V	460 V	575 V							
A	kW	kW	kW	kW	kW	A	hp	hp	hp	hp							kg
Inside-delta circuits, rated operational voltage 200 ... 460 V 2)																	
50	15	**22**	--	--	--	45	10	15	**30**	--	►	**3RW44 22-□BC□4**		1	1 unit	131	6.500
62	18.5	**30**	--	--	--	55	15	20	**40**	--	►	**3RW44 23-□BC□4**		1	1 unit	131	6.500
81	22	**45**	--	--	--	73	20	25	**50**	--	►	**3RW44 24-□BC□4**		1	1 unit	131	6.500
99	30	**55**	--	--	--	88	25	30	**60**	--	►	**3RW44 25-□BC□4**		1	1 unit	131	6.500
133	37	**75**	--	--	--	118	30	40	**75**	--	►	**3RW44 26-□BC□4**		1	1 unit	131	6.500
161	45	**90**	--	--	--	142	40	50	**100**	--	►	**3RW44 27-□BC□4**		1	1 unit	131	6.500
Order No. supplement for connection types																	
• With spring-type terminals												**3**					
• With screw terminals												**1**					
196	55	**110**	--	--	--	173	50	60	**125**	--	B	**3RW44 34-□BC□4**		1	1 unit	131	7.900
232	75	**132**	--	--	--	203	60	75	**150**	--	B	**3RW44 35-□BC□4**		1	1 unit	131	7.900
281	90	**160**	--	--	--	251	75	100	**200**	--	B	**3RW44 36-□BC□4**		1	1 unit	131	7.900
352	110	**200**	--	--	--	312	100	125	**250**	--	B	**3RW44 43-□BC□4**		1	1 unit	131	11.500
433	132	**250**	--	--	--	372	125	150	**300**	--	B	**3RW44 44-□BC□4**		1	1 unit	131	11.500
542	160	**315**	--	--	--	485	150	200	**400**	--	B	**3RW44 45-□BC□4**		1	1 unit	131	11.500
617	200	**355**	--	--	--	546	150	200	**450**	--	B	**3RW44 46-□BC□4**		1	1 unit	131	11.500
748	250	**400**	--	--	--	667	200	250	**600**	--	B	**3RW44 47-□BC□4**		1	1 unit	131	11.500
954	315	**560**	--	--	--	856	300	350	**750**	--	C	**3RW44 53-□BC□4**		1	1 unit	131	50.000
1065	355	**630**	--	--	--	954	350	400	**850**	--	C	**3RW44 54-□BC□4**		1	1 unit	131	50.000
1200	400	**710**	--	--	--	1065	350	450	**950**	--	C	**3RW44 55-□BC□4**		1	1 unit	131	50.000
1351	450	**800**	--	--	--	1200	450	500	**1050**	--	C	**3RW44 56-□BC□4**		1	1 unit	131	50.000
1524	500	**900**	--	--	--	1351	450	600	**1200**	--	C	**3RW44 57-□BC□4**		1	1 unit	131	50.000
1680	560	**1000**	--	--	--	1472	550	650	**1300**	--	C	**3RW44 58-□BC□4**		1	1 unit	131	50.000
1864	630	**1100**	--	--	--	1680	650	750	**1500**	--	C	**3RW44 65-□BC□4**		1	1 unit	131	78.000
2103	710	**1200**	--	--	--	1864	700	850	**1700**	--	C	**3RW44 66-□BC□4**		1	1 unit	131	78.000
Order No. supplement for connection types																	
• With spring-type terminals												**2**					
• With screw terminals												**6**					
Order No. supplement for the rated control supply voltage U_s 3)																	
• 115 V AC													**3**				
• 230 V AC													**4**				

1) In the selection table, the unit rated current I_e refers to the induction motor's rated operational current in the inside-delta circuit. The actual current of the device is approx. 58 % of this value.

2) 3RW44 2. ... 3RW44 4. soft starters with screw terminals: delivery times ► (preferred type),

3) Control by way of the internal 24 V DC supply and direct control by means of PLC possible.

Note:
Soft starter selection depends on the rated motor current.

The 3RW44 solid-state soft starters are designed for normal starting (Class 10). (Inertia load of the overall operating mechanism $J_{Load} < 10 \times J_{Motor}$; starting current 350 % x I_e for 20 s similar load). For any other conditions of use, the devices should be selected using the Win-Soft Starter selection and simulation program. See Technical specifications for information about rated currents for ambient temperatures > 40 °C and switching frequency.

Ambient temperature 40 °C						Ambient temperature 50 °C					DT	Order No.	List Price $ per PU	PU (UNIT, SET, M)	PS*	PG	Weight per PU approx.
Rated operational current I_e 1)	Rated power of induction motors for rated operational voltage U_e					Rated operational current I_e	Rated power of induction motors for rated operational voltage U_e										
	230 V	400 V	500 V	690 V	1000 V		200 V	230 V	460 V	575 V							
A	kW	kW	kW	kW	kW	A	hp	hp	hp	hp							kg
Inside-delta circuits, rated operational voltage 400 ... 600 V 2)																	
50	--	22	**30**	--	--	45	--	--	30	**40**	A	**3RW44 22-□BC□5**		1	1 unit	131	6.500
62	--	30	**37**	--	--	55	--	--	40	**50**	A	**3RW44 23-□BC□5**		1	1 unit	131	6.500
81	--	45	**45**	--	--	73	--	--	50	**60**	A	**3RW44 24-□BC□5**		1	1 unit	131	6.500
99	--	55	**55**	--	--	88	--	--	60	**75**	A	**3RW44 25-□BC□5**		1	1 unit	131	6.500
133	--	75	**90**	--	--	118	--	--	75	**100**	A	**3RW44 26-□BC□5**		1	1 unit	131	6.500
161	--	90	**110**	--	--	142	--	--	100	**125**	A	**3RW44 27-□BC□5**		1	1 unit	131	6.500
Order No. supplement for connection types																	
• With spring-type terminals												**3**					
• With screw terminals												**1**					
196	--	110	**132**	--	--	173	--	--	125	**150**	B	**3RW44 34-□BC□5**		1	1 unit	131	7.900
232	--	132	**160**	--	--	203	--	--	150	**200**	B	**3RW44 35-□BC□5**		1	1 unit	131	7.900
281	--	160	**200**	--	--	251	--	--	200	**250**	B	**3RW44 36-□BC□5**		1	1 unit	131	7.900
352	--	200	**250**	--	--	312	--	--	250	**300**	B	**3RW44 43-□BC□5**		1	1 unit	131	11.500
433	--	250	**315**	--	--	372	--	--	300	**350**	B	**3RW44 44-□BC□5**		1	1 unit	131	11.500
542	--	315	**355**	--	--	485	--	--	400	**500**	B	**3RW44 45-□BC□5**		1	1 unit	131	11.500
617	--	355	**450**	--	--	546	--	--	450	**600**	B	**3RW44 46-□BC□5**		1	1 unit	131	11.500
748	--	400	**500**	--	--	667	--	--	600	**750**	B	**3RW44 47-□BC□5**		1	1 unit	131	11.500
954	--	560	**630**	--	--	856	--	--	750	**950**	C	**3RW44 53-□BC□5**		1	1 unit	131	50.000
1065	--	630	**710**	--	--	954	--	--	850	**1050**	C	**3RW44 54-□BC□5**		1	1 unit	131	50.000
1200	--	710	**800**	--	--	1065	--	--	950	**1200**	C	**3RW44 55-□BC□5**		1	1 unit	131	50.000
1351	--	800	**900**	--	--	1200	--	--	1050	**1350**	C	**3RW44 56-□BC□5**		1	1 unit	131	50.000
1524	--	900	**1000**	--	--	1351	--	--	1200	**1500**	C	**3RW44 57-□BC□5**		1	1 unit	131	50.000
1680	--	1000	**1200**	--	--	1472	--	--	1300	**1650**	C	**3RW44 58-□BC□5**		1	1 unit	131	50.000
1864	--	1100	**1350**	--	--	1680	--	--	1500	**1900**	C	**3RW44 65-□BC□5**		1	1 unit	131	78.000
2103	--	1200	**1500**	--	--	1864	--	--	1700	**2100**	C	**3RW44 66-□BC□5**		1	1 unit	131	78.000
Order No. supplement for connection types																	
• With spring-type terminals												**2**					
• With screw terminals												**6**					
Order No. supplement for the rated control supply voltage U_s 3)																	
• 115 V AC													**3**				
• 230 V AC													**4**				

1) In the selection table, the unit rated current I_e refers to the induction motor's rated operational current in the inside-delta circuit. The actual current of the device is approx. 58 % of this value.

2) Soft starter with screw terminals:
3RW44 2. ... 3RW44 4. Delivery time A
3RW44 5. ... 3RW44 6. Delivery time B.

3) Control by way of the internal 24 V DC supply and direct control by means of PLC possible.

Note:
Soft starter selection depends on the rated motor current.

The 3RW44 solid-state soft starters are designed for normal starting (Class 10). (Inertia load of the overall operating mechanism $J_{Load} < 10 \times J_{Motor}$; starting current 350 % x I_e for 20 s similar load). For any other conditions of use, the devices should be selected using the Win-Soft Starter selection and simulation program. See Technical specifications for information about rated currents for ambient temperatures > 40 °C and switching frequency.

Technical specifications

Type	Terminal		3RW44 ..-.BC3.	3RW44 ..-.BC4.
Control electronics				
Rated values				
Rated control supply voltage	A1/A2/PE	V	115 AC	230 AC
• Tolerance		%	-15/+10	-15/+10
Rated control supply current STANDBY		mA	30	20
Rated control supply current ON				
• 3RW44 2.		mA	300	170
• 3RW44 3.		mA	500	250
• 3RW44 4.		mA	750	400
• 3RW44 5.		mA	450	200
• 3RW44 6.		mA	650	300
Maximum current (pickup bypass)				
• 3RW44 2.		mA	1000	500
• 3RW44 3.		mA	2500	1250
• 3RW44 4.		mA	6000	3000
• 3RW44 5.		mA	4500	2500
• 3RW44 6.		mA	4500	2500
Rated frequency		Hz	50 ... 60	50 ... 60
• Tolerance		%	±10	±10

Type	Terminal		3RW44..	Factory default
Control electronics				
Control inputs				
Input 1	IN1			Start motor right parameter set 1
Input 2	IN2			No action
Input 3	IN3			No action
Input 4	IN4			Trip reset
Supply	L+/L-			
• Rated operational current		mA	Approx. 10 per input to DIN 19240	
• Rated operational voltage	L+		Internal voltage: 24 V DC from internal supply through terminal L+ to IN1 ... IN4. Maximum load at L+ approx. 55 mA	
	L-		External voltage: DC external voltage (acc. to DIN 19240) through terminals L- and IN1 ... IN4 (min. 12 V DC, max. 30 V DC)	
Thermistor motor protection input				
Input	T1/T2		PTC type A or Thermoclick	Deactivated
Relay outputs (floating auxiliary contacts)				
Output 1	13/14			ON period
Output 2	23/24			No action
Output 3	33/34			No action
Output 4	95/96/98			Group fault
Switching capacity of the relay outputs (auxiliary contacts)				
230 V/AC-15		A	3 at 240 V	
24 V/DC-13		A	1 at 24 V	
Protection against overvoltages			Protection by means of varistor through relay contact	
Short-circuit protection			4 A gL/gG operational class; 6 A quick (fuse is not included in scope of supply)	
Protection functions				
Motor protection functions				
Trips in the event of			Thermal overloading of the motor	
Trip class acc. to IEC 60947-4-1		Class	5/10/15/20/30	10
Phase failure sensitivity		%	>40	
Overload warning			Yes	
Reset and recovery			Manual/Automatic	Manual
Reset option after tripping			Manual/Automatic	Manual
Recovery time		min.	1 ... 30	1
Device protection functions				
Trips in the event of			Thermal overloading of the thyristors	
Reset option after tripping			Manual/Automatic	Manual
Recovery time		min.	0.5	
Bypass protection functions				
Trips in the event of			Thermal overloading of the bypass contacts	
Reset option after tripping			Manual	
Recovery time		min.	1	

Type		3RW44..	Factory default
Control times and parameters			
Control times			
Closing time (with connected control voltage)	ms	<50	
Closing time (automatic mode)	ms	<4000	
Recovery time (closing command in active ramp-down)	ms	<100	
Mains failure bridging time			
Control supply voltage	ms	100	
Mains failure response time			
Load circuit	ms	100	
Reclosing lockout after overload trip			
Motor protection trip	min.	1 ... 30	1
Device protection trip	s	30	
Setting options for starting			
Voltage ramp for starting voltage	%	20 ... 100	30
Torque control for starting torque	%	10 ... 100	10
Torque control for limit torque	%	20 ... 200	150
Starting time	s	0 ... 360[3]	20
Maximum starting time	s	1 ... 1000	Deactivated
Current limit value	%	125 ... 550[1]	450
Breakaway voltage	%	40 ... 100	80
Breakaway time	s	0 ... 2	Deactivated
Motor heat output	%	1 ... 100	20
Creep mode Left/Right running			
Speed factor as function of rated speed ($n = n_{rated}$/factor)		3 ... 21	7
Creep torque[2]	%	20 ... 100	50
Setting options for ramp-down			
Torque control for stopping torque	%	10 ... 100	10
Ramp-down time	s	0 ... 360[3]	10
Dynamic braking torque	%	20 ... 100	50
DC braking torque	%	20 ... 100	50
Operating indications		Test voltage Test mains phases Ready to start Start active Motor running Ramp-down active Emergency start active	
Warnings/error signals		Mains voltage missing Leading-edge phase error Phase failure • L1 • L2 • L3 Missing load phase • T1 • T2 • T3 Failure • Contact element 1 (thyristor) • Contact element 2 (thyristor) • Contact element 3 (thyristor) Flash memory faulty Supply voltage • Below 75 % • Below 85 % • Over 110 % Current unbalance exceeded Thermal motor model overload Prewarning limit exceeded • Motor heating • Time-related trip reserve Bypass element defective Mains voltage too high Device not named Wrong naming version Current measuring range exceeded Bypass element protection disconnection Power section • Overheated • Overheating	

1) Max. current limit value for 3RW44 53 ... 3RW44 57: 500 % and for 3RW44 58 ... 3RW44 66: 450 %.

2) Reference variable depends on the motor used but is always smaller than the rated torque of the motor.

3) Actual motor start times are load dependent.

Type	3RW44 ..	Factory default
Control times and parameters		
Warnings/error signals (continued)	Temperature sensor • Overload • Open circuit • Short-circuit Ground fault • Detected Connection abort in manual operating mode Max. number of starts exceeded I_e limit value overshoot/undershoot Heat sink sensor • Open circuit • Short-circuit Quick-stop active Switching block defective I_e/class setting not permissible No external start-up parameters received PAA fault	
Control inputs		
Input 1		Motor right parameter set 1
Input 2		No action
Input 3		No action
Input 4		Trip reset
Parameterizing options for control inputs 1 ... 4	No action Local manual mode Emergency start Creep speed Quick-stop Trip reset Motor right parameter set 1 Motor left parameter set 1[1)] Motor right parameter set 2 Motor left parameter set 2[1)] Motor right parameter set 3 Motor left parameter set 3[1)]	
Relay outputs		
Output 1		ON period
Output 2		No action
Output 3		No action
Output 4		Group fault
Parameterizing options for relay outputs 1 ... 3	No action PAA output 1 PAA output 2 Input 1 Input 2 Input 3 Input 4 Starting Operation/Bypass Ramp-down ON period Command motor on DC braking contactor Group warning Group fault Bus fault Device fault Power on Ready to start	
Motor temperature sensor	Deactivated Thermoclick PTC type A	

[1)] Parameter motor left possible only in conjunction with creep mode.

Type			3RW44 2.	3RW44 3.	3RW44 4.	3RW44 5. 3RW44 6.
Conductor cross-sections						
Screw terminals	**Main conductors**					
With box terminal				3RT19 55-4G (55 kW)	3RT19 66-4G	--
Front clamping point connected NSB00479	• Finely stranded with end sleeve	mm^2	2.5 ... 35	16 ... 70	70 ... 240	--
	• Finely stranded without end sleeve	mm^2	4 ... 50	16 ... 70	70 ... 240	--
	• Solid	mm^2	2.5 ... 16	--	--	--
	• Stranded	mm^2	4 ... 70	16 ... 70	95 ... 300	--
	• Ribbon cable conductors (number x width x thickness)	mm	6 x 9 x 0.8	Min. 3 x 9 x 0.8 Max. 6 x 15.5 x 0.8	Min. 6 x 9 x 0.8 Max. 20 x 24 x 0.5	--
	• AWG cables, solid or stranded	AWG	10 ... 2/0	6 ... 2/0	3/0 ... 600 kcmil	--
Rear clamping point connected NSB00480	• Finely stranded with end sleeve	mm^2	2.5 ... 50	16 ... 70	120 ... 185	--
	• Finely stranded without end sleeve	mm^2	10 ... 50	16 ... 70	120 ... 185	--
	• Solid	mm^2	2.5 ... 16	--	--	--
	• Stranded	mm^2	10 ... 70	16 ... 70	120 ... 240	--
	• Ribbon cable conductors (number x width x thickness)	mm	6 x 9 x 0.8	Min. 3 x 9 x 0.8 Max. 6 x 15.5 x 0.8	Min. 6 x 9 x 0.8 Max. 20 x 24 x 0.5	--
	• AWG cables, solid or stranded	AWG	10 ... 2/0	6 ... 2/0	250 ... 500 kcmil	--
Both clamping points connected 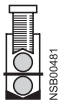 NSB00481	• Finely stranded with end sleeve	mm^2	2 x (2.5 ... 35)	Max. 1 x 50, 1 x 70	Min. 2 x 50 Max. 2 x 185	--
	• Finely stranded without end sleeve	mm^2	2 x (4 ... 35)	Max. 1 x 50, 1 x 70	Min. 2 x 50 Max. 2 x 185	--
	• Solid	mm^2	2 x (2.5 ... 16)	--	--	--
	• Stranded	mm^2	2 x (4 ... 50)	Max. 2 x 70	Max. 2 x 70 Max. 2 x 240	--
	• Ribbon cable conductors (number x width x thickness)	mm	2 x (6 x 9 x 0.8)	Max. 2 x (6 x 15.5 x 0.8)	Max. 2 x (20 x 24 x 0.5)	--
	• AWG cables, solid or stranded	AWG	2 x (10 ... 1/0)	Max. 2 x 1/0	Min. 2 x 2/0 Max. 2 x 500 kcmil	--
	• Terminal screws		M6 (hexagon socket, A/F4)	M10 (hexagon socket, A/F4)	M12 (hexagon socket, A/F5)	--
	- Tightening torque	NM lb.in	4 ... 6 36 ... 53	10 ... 12 90 ... 110	20 ... 22 180 ... 195	-- --
Screw terminals	**Main conductors**					
With box terminal			--	3RT19 56-4G	--	--
Front or rear clamping point connected 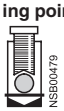 NSB00479 NSB00480	• Finely stranded with end sleeve	mm^2	--	16 ... 120	--	--
	• Finely stranded without end sleeve	mm^2	--	16 ... 120	--	--
	• Stranded	mm^2	--	16 ... 120	--	--
	• Ribbon cable conductors (number x width x thickness)	mm	--	Min. 3 x 9 x 0.8 Max. 6 x 15.5 x 0.8	--	--
	• AWG cables, solid or stranded	AWG	--	6 ... 250 kcmil	--	--
Both clamping points connected 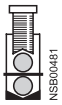 NSB00481	• Finely stranded with end sleeve	mm^2	--	Max. 1 x 95, 1 x 120	--	--
	• Finely stranded without end sleeve	mm^2	--	Max. 1 x 95, 1 x 120	--	--
	• Stranded	mm^2	--	Max. 2 x 120	--	--
	• Ribbon cable conductors (number x width x thickness)	mm	--	Max. 2 x (10 x 15.5 x 0.8)	--	--
	• AWG cables, solid or stranded	AWG	--	Max. 2 x 3/0	--	--
Screw terminals	**Main conductors**					
	Without box terminal/busbar connection					
	• Finely stranded with cable lug	mm^2	--	16 ... 95[1)]	50 ... 240[2)]	50 ... 240[2)]
	• Stranded with cable lug	mm^2	--	25 ... 120[1)]	70 ... 240[2)]	70 ... 240[2)]
	• AWG cables, solid or stranded	AWG	--	4 ... 250 kcmil	2/0 ... 500 kcmil	2/0 ... 500 kcmil
	• Connecting bar (max. width)	mm	--	17	25	60
	• Terminal screws		--	M8 x 25 (A/F13)	M10 x 30 (A/F17)	M12 x 40
	- Tightening torque	NM lb.in	-- --	10 ... 14 89 ... 124	14 ... 24 124 ... 210	20 ... 35 177 ... 310

1) When connecting cable lugs to DIN 46235, use 3RT19 56-4EA1 terminal cover for conductor cross-sections from 95 mm^2 to ensure phase spacing.

2) When connecting cable lugs to DIN 46234, the 3RT19 66-4EA1 terminal cover must be used for conductor cross-sections of 240 mm^2 and more as well as DIN 46235 for conductor cross-sections of 185 mm^2 and more to keep the phase clearance.

Soft starters	Type		3RW44..
Conductor cross-sections			
Auxiliary conductors (1 or 2 conductors can be connected):			
	Screw terminals		
	• Solid	mm^2	2 x (0.5 ... 2.5)
	• Finely stranded with end sleeve	mm^2	2 x (0.5 ... 1.5)
	• AWG cables		
	- Solid or stranded	AWG	2 x (20 ... 14)
	- Finely stranded with end sleeve	AWG	2 x (20 ... 16)
	• Terminal screws		
	- Tightening torque	NM	0.8 ... 1.2
		lb.in	7 ... 10.3
	Spring-type terminals		
	• Solid	mm^2	2 x (0.25 ... 1.5)
	• Finely stranded with end sleeve	mm^2	2 x (0.25 ... 1.5)
	• AWG cables, solid or stranded	AWG	2 x (24 ... 16)

	Standard	Parameters
Electromagnetic compatibility acc. to EN 60947-4-2		
EMC interference immunity		
Electrostatic discharge (ESD)	EN 61000-4-2	±4 kV contact discharge, ±8 kV air discharge
Electromagnetic RF fields	EN 61000-4-3	Frequency range: 80 ... 1000 MHz with 80 % at 1 kHz Degree of severity 3, 10 V/m
Conducted RF interference	EN 61000-4-6	Frequency range: 150 kHz ... 80 MHz with 80 % at 1 kHz Interference 10 V
RF voltages and RF currents on cables • Burst • Surge	 EN 61000-4-4 EN 61000-4-5	 ±2 kV/5 kHz ±1 kV line to line ±2 kV line to ground
EMC interference emission		
EMC interference field strength	EN 55011	Limit value of Class A at 30 ... 1000 MHz
Radio interference voltage	EN 55011	Limit value of Class A at 0.15 ... 30 MHz
Is an RI suppression filter necessary?		
Degree of noise suppression A (industrial applications)	No	

Circuit Breaker SCCR

Soft starters ToC 1		Circuit Brakers																	
		Thermal Magnetic						Instantaneous Trip						Fuse					
Q11 Type	Rated current	480 V Type	SCCR kA	Max. size A	600 V Type	SCCR kA	Max. size A	480 V Type	SCCR kA	Max. size A	600 V Type	SCCR kA	Max. size A	600 V Type	SCCR kA	Max. size A	600 V Type	SCCR kA	Max. size A
3RW44 22	11	ED63B, HEG3G	100	40				ED63A, HEM3M	100	40	ED63A, HEM3M	50	40	RK5	100	50	J	100	100
3RW44 23	23	ED63B, HEG3G	100	50				ED63A, HEM3M	100	50	ED63A, HEM3M	50	50	RK5	100	60	J	100	120
3RW44 24	29	ED63B, HEG3G	100	70				ED63A, HEM3M	100	100	ED63A, HEM3M	50	50	RK5	100	80	J	100	160
3RW44 25	29	ED63B, HEG3G	100	70				ED63A, HEM3M	100	50	ED63A, HEM3M	50	50	RK5	100	80			
3RW44 26	29	ED63B, HEG3G	100	100				ED63A, HEM3M	100	100	ED63A, HEM3M	50	100	RK5	100	125	J	100	250
3RW44 27	34	FD63B	100	150				ED63A, HEM3M	100	100	ED63A, HEM3M	50	125	RK5	100	150	J	100	300
3RW44 34	42	FD63B	100	150	FD63B	50	150	ED63A, HEM3M	100	125	FXD63A	50	150	RK5	100	200	J	100	400
3RW44 35	58	FD63B	100	150	FD63B	50	150	FXD63A	100	150	FXD63A	50	150	RK5	100	200	J	100	400
3RW44 36	62	JD63B	100	200	JD63B	50	250	FXD63A	100	250	FXD63A	50	250	RK5	100	250	J	100	500
3RW44 43	73	JD63B	100	300	JD63B	50	250	FXD63A	100	250	JXD63A	50	300	RK5	100	300	J	100	600
3RW44 44	98	JD63B	100	300	JD63B	50	300	JXD63A	100	300	JXD63A	50	300	RK5	100	350			
3RW44 45	98	JD63B	100	400	JD63B	50	400	JXD63A	100	400	JXD63A	50	400	RK5	100	450			
3RW44 46	98	LD63B	100	500	LD63B	50	450	LXD63H	100	400	JXD63A	50	400	RK5	100	600			
3RW44 47	98	LD63B	100	600	LD63B	50	600	LXD63H	100	600	LXD63H	50	600	L	100	700			
3RW44 53	117	HMD6	65	800/ 800	HMD6	50	800/ 800							L	100	1000			
3RW44 54	145	HND6	100	1200/ 900	HND6	50	1200/ 900							L	100	1000			
3RW44 55	145	HND6	100	1200/ 900	HND6	50	1200/ 900							L	100	1000			
3RW44 56	145	HND6	100	1200/ 1000	HND6	50	1200/ 1000							L	100	1000			
3RW44 57	145	HND6	100	1200/ 1000	HND6	50	1200/ 1000							L	100	1000			
3RW44 58	145	CND6	65	1200	CND6	65	1200												
3RW44 65	205	CND6	42	1600	CND6	42	1600												
3RW44 66	248	CND6	42	1600	CND6	42	1600												

Specified Type	Others permitted
ED63A	HED63A, HHED63A or CED63A
FXD63A	HFXD63A or CFD63A
JXD63A	HJXD63A or CJD63A
ED63B	HED63B, HHED63B or CED63B
FD63B	HFD63B, HHFD63B or CFD63B
JD63B	HJ63B, HHJD63B or CJD63B
HND6	HNXD6 or CND6

Inline circuit fused version with 3NE1 SITOR all-range fuse (semiconductor and line protection)

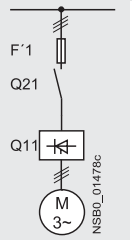

For matching fuse bases see Catalog LV 1 under "SENTRON Switching and Protection Devices for Power Distribution" —> "Switch Disconnectors", and Catalog ET B1 under "BETA Protecting" —> "SITOR Semiconductor Fuses" or go to www.siemens.com/sitor —>"Products" —>"BETA Protecting"—>"SITOR"

Soft starters		All-range fuses				Line contactors up to 400 V	Braking contactors[1)2)] (for example circuit see page 17-264)	
ToC 2	Rated current		Rated current	Voltage	Size	(optional)		
Q11 Type	A	F'1 Type	A	V		Q21 Type	Q91 Type	Q92 Type
Type of coordination "2"[3)]: I_q = 65 kA								
3RW44 22	29	3NE1 020-2	80	690 +5 %	00	3RT10 34	3RT15 26	--
3RW44 23	36	3NE1 020-2	80	690 +5 %	00	3RT10 35	3RT15 26	--
3RW44 24	47	3NE1 021-2	100	690 +5 %	00	3RT10 36	3RT15 35	--
3RW44 25	57	3NE1 022-2	125	690 +5 %	00	3RT10 44	3RT15 35	--
3RW44 26	77	3NE1 022-2	125	690 +5 %	00	3RT10 45	3RT10 24	3RT10 35
3RW44 27	93	3NE1 024-2	160	690 +5 %	1	3RT10 46	3RT10 25	3RT10 36
3RW44 34	113	3NE1 225-2	200	690 +5 %	1	3RT10 54	3RT10 34	3RT10 44
3RW44 35	134	3NE1 227-2	250	690 +5 %	1	3RT10 55	3RT10 36	3RT10 45
3RW44 36	162	3NE1 227-2	250	690 +5 %	1	3RT10 56	3RT10 44	3RT10 45
3RW44 43	203	3NE1 230-2	315	600 +10 %	1	3RT10 64	3RT10 44	3RT10 54
3RW44 44	250	3NE1 331-2	350	460 +10 %	2	3RT10 65	3RT10 44	3RT10 55
3RW44 45	313	3NE1 333-2	450	690 +5 %	2	3RT10 75	3RT10 54	3RT10 56
3RW44 46	356	3NE1 334-2	500	690 +5 %	2	3RT10 75	3RT10 54	3RT10 56
3RW44 47	432	3NE1 435-2	560	690 +5 %	3	3RT10 76	3RT10 55	3RT10 64
3RW44 53	551	2 x 3NE1 334-2	500	690 +10 %	2	3TF68	3RT10 64	3RT10 66
3RW44 54	615	2 x 3NE1 334-2	500	690 +10 %	2	3TF68	3RT10 64	3RT10 75
3RW44 55	693	2 x 3NE1 334-2	500	690 +10 %	2	3TF69	3RT10 65	3RT10 75
3RW44 56	780	2 x 3NE1 435-2	560	690 +10 %	3	3TF69	3RT10 65	3RT10 75
3RW44 57	880	2 x 3NE1 435-2	560	690 +10 %	3		3RT10 75	3RT10 76
3RW44 58	970	2 x 3NE1 435-2	560	690 +10 %	3		3RT10 75	3RT10 76
3RW44 65	1076	3 x 3NE1 334-2	500	690 +10 %	2		3RT10 75	3TF68
3RW44 66	1214	3 x 3NE1 435-2	560	690 +10 %	3		3RT10 76	3TF68

1) If the ramp-down function "Combined braking" is selected, no braking contactor is required.
If the ramp-down function "DC braking" is selected, a braking contactor must be used in addition (see table for type).
For applications with large centrifugal masses ($J_{Load} > J_{Motor}$) we recommend the function "DC braking".

2) Additional auxiliary relay K4:
LZX:RT4A4T30
(3RW44 soft starter with rated control supply voltage 230 V AC),
LZX:RT4A4S15
(3RW44 soft starter with rated control supply voltage 115 V AC).

3) The type of coordination "2" refers only to soft starters in combination with the stipulated protective device (motor starter protector/circuit breaker/fuse), not to any additional components in the feeder.
The types of coordination are explained under "3RA1 Fuseless Load Feeders".

Inline circuit fused version with 3NE or 3NC SITOR semiconductor fuse
(semiconductor protection by fuse, line and overload protection by motor starter protector/circuit breaker)

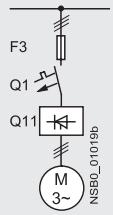

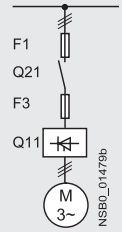

For matching fuse bases see Catalog LV 1 under "SENTRON Switching and Protection Devices for Power Distribution" —> "Switch Disconnectors", and Catalog ET B1 under "BETA Protecting" —> "SITOR Semiconductor Fuses" or go to rwww.siemens.com/sitor —>"Products" —>"BETA Protecting" —>"SITOR"

Soft starters		Semiconductor fuses, minimum			Semiconductor fuses, maximum			Semiconductor fuses (cylinder)		
ToC 2	Rated current	690 V +10 %	Rated current	Size	690 V +10 %	Rated current	Size		Rated current	Size
Q11 Type	A	F3 Type	A		F3 Type	A		F3 Type	A	
Type of coordination "2"[3]: I_q = 65 kA										
3RW44 22	29	3NE4 120	80	0	3NE4 121	100	0	3NC2 280	80	22 x 58
3RW44 23	36	3NE4 121	100	0	3NE4 121	100	0	3NC2 200	100	22 x 58
3RW44 24	47	3NE4 121	100	0	3NE4 122	125	0	3NC2 200	100	22 x 58
3RW44 25	57	3NE4 122	125	0	3NE4 124	160	0			
3RW44 26	77	3NE4 124	160	0	3NE4 124	160	0			
3RW44 27	93	3NE3 224	160	1	3NE3 332-0B	400	2			
3RW44 34	113	3NE3 225	200	1	3NE3 335	560	2			
3RW44 35	134	3NE3 225	200	1	3NE3 335	560	2			
3RW44 36	162	3NE3 227	250	1	3NE3 333	450	2			
3RW44 43	203	3NE3 230-0B	315	1	3NE3 333	450	2			
3RW44 44	250	3NE3 230-0B	315	1	3NE3 333	450	2			
3RW44 45	313	3NE3 233	450	1	3NE3 336	630	2			
3RW44 46	356	3NE3 333	450	2	3NE3 336	630	2			
3RW44 47	432	3NE3 335	560	2	3NE3 338-8	800	2			
3RW44 53	551	2 x 3NE3 335	560	2	3 x 3NE3 334-0B	500	2			
3RW44 54	615	2 x 3NE3 335	560	2	3 x 3NE3 334-0B	500	2			
3RW44 55	693	2 x 3NE3 335	560	2	3 x 3NE3 334-0B	500	2			
3RW44 56	780	2 x 3NE3 336	630	2	2 x 3NE3 340-8	900	2			
3RW44 57	880	2 x 3NE3 336	630	2	2 x 3NE3 340-8	900	2			
3RW44 58	970	2 x 3NE3 336	630	2	2 x 3NE3 340-8	900	2			
3RW44 65	1076	2 x 3NE3 340-8	900	2	3 x 3NE3 338-8	800	2			
3RW44 66	1214	2 x 3NE3 340-8	900	2	3 x 3NE3 338-8	800	2			

Soft starters		Line contactors up to 400 V	Braking contactors[1)2)]		Motor starter protectors/ circuit breakers		Line protection, maximum		
ToC 2	Rated current	(optional)	(for example circuit see page 17-258)		440 V +10 %	Rated current	690 V +5 %	Rated current	Size
Q11 Type	A	Q21 Type	Q91 Type	Q92 Type	Q1 Type	A	F1 Type	A	
Type of coordination "2"[3]: I_q = 65 kA									
3RW44 22	29	3RT10 34	3RT15 26	--	3RV10 41-4HA10	50	3NA3 820-6	50	00
3RW44 23	36	3RT10 35	3RT15 26	--	3RV10 41-4JA10	63	3NA3 822-6	63	00
3RW44 24	47	3RT10 36	3RT15 35	--	3RV10 41-4KA10	75	3NA3 824-6	80	00
3RW44 25	57	3RT10 44	3RT15 35	--	3RV10 41-4LA10	90	3NA3 830-6	100	00
3RW44 26	77	3RT10 45	3RT10 24	3RT10 35	3RV10 41-4MA10	100	3NA3 132-6	125	1
3RW44 27	93	3RT10 46	3RT10 25	3RT10 36	3RV10 41-4MA10	100	3NA3 136-6	160	1
3RW44 34	113	3RT10 54	3RT10 34	3RT10 44	3VL17 16	160	3NA3 244-6	250	2
3RW44 35	134	3RT10 55	3RT10 36	3RT10 45	3VL17 16	160	3NA3 244-6	250	2
3RW44 36	162	3RT10 56	3RT10 44	3RT10 45	3VL37 25	250	3NA3 365-6	500	3
3RW44 43	203	3RT10 64	3RT10 44	3RT10 54	3VL47 31	315	2 x 3NA3 354-6	2 x 355	3
3RW44 44	250	3RT10 65	3RT10 44	3RT10 55	3VL47 31	315	2 x 3NA3 354-6	2 x 355	3
3RW44 45	313	3RT10 75	3RT10 54	3RT10 56	3VL47 40	400	2 x 3NA3 365-6	2 x 500	3
3RW44 46	356	3RT10 75	3RT10 54	3RT10 56	3VL47 40	400	2 x 3NA3 365-6	2 x 500	3
3RW44 47	432	3RT10 76	3RT10 55	3RT10 64	3VL57 50	500	2 x 3NA3 365-6	2 x 500	3
3RW44 53	551	3TF68	3RT10 64	3RT10 66	3VL67 80	800	2 x 3NA3 365-6	2 x 500	3
3RW44 54	615	3TF68	3RT10 64	3RT10 75	3VL67 80	800	2 x 3NA3 365-6	2 x 500	3
3RW44 55	693	3TF69	3RT10 65	3RT10 75	3VL67 80	800	2 x 3NA3 365-6	2 x 500	3
3RW44 56	780	3TF69	3RT10 65	3RT10 75	3VL77 10	1000	2 x 3NA3 365-6	2 x 500	3
3RW44 57	880		3RT10 75	3RT10 76	3VL77 10	1000	2 x 3NA3 365-6	2 x 500	3
3RW44 58	970		3RT10 75	3RT10 76	3VL77 12	1250	3 x 3NA3 365-6	3 x 500	3
3RW44 65	1076		3RT10 75	3TF68	3VL77 12	1250	3 x 3NA3 365-6	3 x 500	3
3RW44 66	1214		3RT10 76	3TF68	3VL77 12	1250	3 x 3NA3 365-6	3 x 500	3

1) If the ramp-down function "Combined braking" is selected, no braking contactor is required. If the ramp-down function "DC braking" is selected, a braking contactor must be used in addition (see table for type).
For applications with large centrifugal masses ($J_{Load} > J_{Motor}$) we recommend the function "DC braking".

2) Additional auxiliary relay K4:
LZX:RT4A4T30
(3RW44 soft starter with rated control supply voltage 230 V AC),
LZX:RT4A4S15
(3RW44 soft starter with rated control supply voltage 115 V AC).

3) The type of coordination "2" refers only to soft starters in combination with the stipulated protective device (motor starter protector/circuit breaker/fuse), not to any additional components in the feeder. The types of coordination are explained under "3RA1 Fuseless Load Feeders".

Inside-delta circuit fused version with 3NE or 3NC SITOR fuses
(semiconductor protection by fuse, lead and overload protection by motor starter protector/circuit breaker)

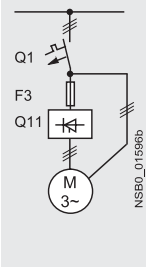

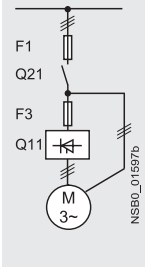

For matching fuse bases see Catalog LV 1 under "SENTRON Switching and Protection Devices for Power Distribution" —> "Switch Disconnectors", and Catalog ET B1 under "BETA Protecting" —> "SITOR Semiconductor Fuses" or go to www.siemens.com/sitor —>"Products" —>"BETA Protecting" —>"SITOR"

Soft starters		Semiconductor fuses, minimum			Semiconductor fuses, maximum			Semiconductor fuses (cylinder)		
ToC 2	Rated current	690 V +10 %	Rated current	Size	690 V +10 %	Rated current	Size		Rated current	Size
Q11 Type	A	F3 Type	A		F3 Type	A		F3 Type	A	
Type of coordination "2" [1]										
3RW44 22	50	3NE4 120	80	0	3NE4 121	100	0	3NC2 280	80	22 x 58
3RW44 23	62	3NE4 121	100	0	3NE4 121	100	0	3NC2 200	100	22 x 58
3RW44 24	81	3NE4 121	100	0	3NE4 122	125	0	3NC2 200	100	22 x 58
3RW44 25	99	3NE4 122	125	0	3NE4 124	160	0			
3RW44 26	133	3NE4 124	160	0	3NE4 124	160	0			
3RW44 27	161	3NE3 224	160	1	3NE3 332-0B	400	2			
3RW44 34	196	3NE3 225	200	1	3NE3 335	560	2			
3RW44 35	232	3NE3 225	200	1	3NE3 335	560	2			
3RW44 36	281	3NE3 227	250	1	3NE3 333	450	2			
3RW44 43	352	3NE3 230-0B	315	1	3NE3 333	450	2			
3RW44 44	433	3NE3 230-0B	315	1	3NE3 333	450	2			
3RW44 45	542	3NE3 233	450	1	3NE3 336	630	2			
3RW44 46	617	3NE3 333	450	2	3NE3 336	630	2			
3RW44 47	748	3NE3 335	560	2	3NE3 338-8	800	2			
3RW44 53	954	2 x 3NE3 335	560	2	3 x 3NE3 334-0B	500	2			
3RW44 54	1065	2 x 3NE3 335	560	2	3 x 3NE3 334-0B	500	2			
3RW44 55	1200	2 x 3NE3 335	560	2	3 x 3NE3 334-0B	500	2			
3RW44 56	1351	2 x 3NE3 336	630	2	2 x 3NE3 340-8	900	2			
3RW44 57	1524	2 x 3NE3 336	630	2	3 x 3NE3 340-8	900	2			
3RW44 58	1680	2 x 3NE3 336	630	2	3 x 3NE3 340-8	900	2			
3RW44 65	1864	2 x 3NE3 340-8	900	2	3 x 3NE3 338-8	800	2			
3RW44 66	2103	2 x 3NE3 340-8	900	2	3 x 3NE3 338-8	800	2			

Soft starters		Line contactors up to 400 V	Motor starter protectors/ circuit breakers		Line protection, maximum		
ToC 2	Rated current	(optional)	440 V +10 %	Rated current	690 V +5 %	Rated current	Size
Q11 Type	A	Q21 Type	Q1 Type	A	F1 Type	A	
Type of coordination "2" [1]							
3RW44 22	50	3RT10 36-1AP04	3RV10 42-4KA10	75	3NA3 824-6	80	00
3RW44 23	62	3RT10 44-1AP04	3RV10 42-4LA10	90	3NA3 830-6	100	00
3RW44 24	81	3RT10 46-1AP04	3RV10 42-4MA10	100	3NA3 132-6	125	1
3RW44 25	99	3RT10 54-1AP36	3VL27 16	160	3NA3 136-6	160	1
3RW44 26	133	3RT10 55-6AP36	3VL27 16	160	3NA3 240-6	200	2
3RW44 27	161	3RT10 56-6AP36	3VL37 20	200	3NA3 244-6	250	2
3RW44 34	196	3RT10 64-6AP36	3VL37 25	250	3NA3 360-6	400	3
3RW44 35	232	3RT10 65-6AP36	3VL47 31	315	3NA3 360-6	400	3
3RW44 36	281	3RT10 66-6AP36	3VL47 40	400	2 x 3NA3 360-6	2 x 400	3
3RW44 43	352	3RT10 75-6AP36	3VL47 40	400	2 x 3NA3 365-6	2 x 500	3
3RW44 44	433	3RT10 76-6AP36	3VL57 50	500	2 x 3NA3 365-6	2 x 500	3
3RW44 45	542	3TF68 44-0CM7	3VL57 63	800	3 x 3NA3 365-6	3 x 500	3
3RW44 46	617	3TF68 44-0CM7	3VL67 80	800	3 x 3NA3 365-6	3 x 500	3
3RW44 47	748	3TF69	3VL67 80	800	3 x 3NA3 365-6	3 x 500	3
3RW44 53	954		3VL77 10	1000	3 x 3NA3 365-6	3 x 500	3
3RW44 54	1065		3VL77 12	1250	3 x 3NA3 365-6	3 x 500	3
3RW44 55	1200		3VL87 16	1600	3 x 3NA3 365-6	3 x 500	3
3RW44 56	1351		3VL87 16	1600	3 x 3NA3 372	3 x 630	3
3RW44 57	1524		3VL87 16	1600	3 x 3NA3 372	3 x 630	3
3RW44 58	1680		3WL12 20	2000	2 x 3NA3 480	2 x 1000	4
3RW44 65	1864		3WL12 25	2500	2 x 3NA3 482	2 x 1250	4
3RW44 66	2103		3WL12 25	2500	2 x 3NA3 482	2 x 1250	4

[1] The type of coordination "2" refers only to soft starters in combination with the stipulated protective device (motor starter protector/circuit breaker/fuse), not to any additional components in the feeder.

The types of coordination are explained under "3RA1 Fuseless Load Feeders".

Characteristic curves

Motor protection tripping characteristics for 3RW44 (with symmetry)

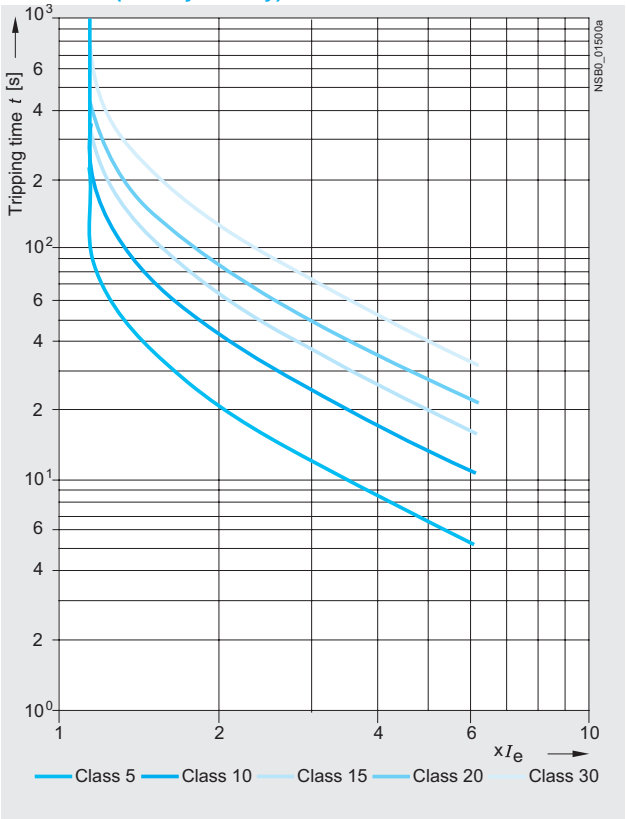

Motor protection tripping characteristics for 3RW44 (with asymmetry)

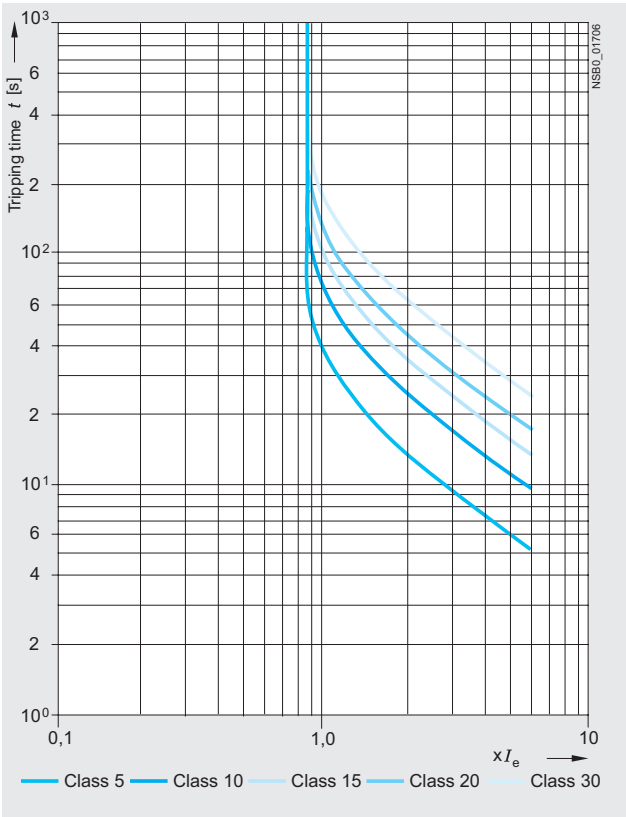

Permissible installation height

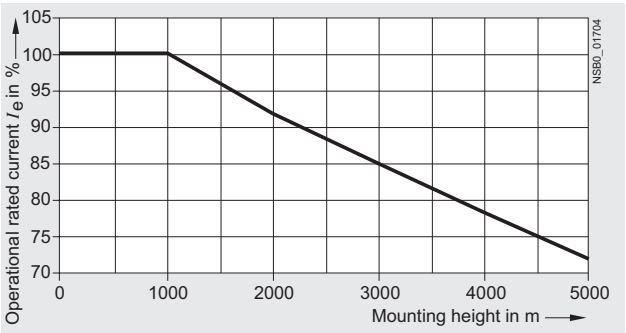

At an installation height above 2000 m, the max. permissible operational voltage is reduced to 460 V.

More information

Application examples for normal starting (Class 10)

Normal starting Class 10 (up to 20 s with 350 % $I_{n\ motor}$),
The soft starter rating can be selected to be as high as the rating of the motor used

Application		Conveyor belt	Roller conveyor	Compressor	Small fan	Pump	Hydraulic pump
Starting parameters							
• Voltage ramp and current limiting							
- Starting voltage	%	70	60	50	30	30	30
- Starting time	s	10	10	10	10	10	10
- Current limit value		Deactivated	Deactivated	4 x I_M	4 x I_M	Deactivated	Deactivated
• Torque ramp							
- Starting torque		60	50	40	20	10	10
- End torque		150	150	150	150	150	150
- Starting time		10	10	10	10	10	10
• Breakaway pulse		Deactivated (0 ms)	Deactivated (0 ms)	Deactivated (0 ms)	Deactivated (0 ms)	Deactivated (0 ms)	Deactivated (0 ms)
Ramp-down mode		Smooth ramp-down	Smooth ramp-down	Free ramp-down	Free ramp-down	Pump ramp-down	Free ramp-down

Application examples for heavy starting (Class 20)

Heavy starting Class 20 (up to 40 s with 350 % $I_{n\ motor}$),
The soft starter has to be selected one performance class higher than the motor used

Application		Stirrer	Centrifuge	Milling machine
Starting parameters				
• Voltage ramp and current limiting				
- Starting voltage	%	30	30	30
- Starting time	s	30	30	30
- Current limit value		4 x I_M	4 x I_M	4 x I_M
• Torque ramp				
- Starting torque		30	30	30
- End torque		150	150	150
- Starting time		30	30	30
• Breakaway pulse		Deactivated (0 ms)	Deactivated (0 ms)	Deactivated (0 ms)
Ramp-down mode		Free ramp-down	Free ramp-down	Free ramp-down or DC braking

Application examples for very heavy starting (Class 30)

Very heavy starting Class 30 (up to 60 s with 350 % $I_{n\ motor}$),
The soft starter has to be selected two performance classes higher than the motor used

Application		Large fan	Mill	Crusher	Circular saw/bandsaw
Starting parameters					
• Voltage ramp and current limiting					
- Starting voltage	%	30	50	50	30
- Starting time	s	60	60	60	60
- Current limit value		4 x I_M	4 x I_M	4 x I_M	4 x I_M
• Torque ramp					
- Starting torque		20	50	50	20
- End torque		150	150	150	150
- Starting time		60	60	60	60
• Breakaway pulse		Deactivated (0 ms)	80 %, 300 ms	80 %, 300 ms	Deactivated (0 ms)
Ramp-down mode		Free ramp-down	Free ramp-down	Free ramp-down	Free ramp-down

Note:
These tables present sample set values and device sizes. They are intended only for the purposes of information and are not binding. The set values depend on the application in question and must be optimized during commissioning.
The soft starter dimensions should be checked where necessary with the Win-Soft Starter software or with the help of Technical Assistance.

Circuit concept

The SIRIUS 3RW44 soft starters can be operated in two different types of circuit.

- Inline circuit
  The controls for isolating and protecting the motor are simply connected in series with the soft starter. The motor is connected to the soft starter with three cables.
- Inside-delta circuit
  The wiring is similar to that of wye-delta starters. The phases of the soft starter are connected in series with the individual motor windings. The soft starter then only has to carry the phase current, amounting to about 58 % of the rated motor current (conductor current).

Comparison of the types of circuit

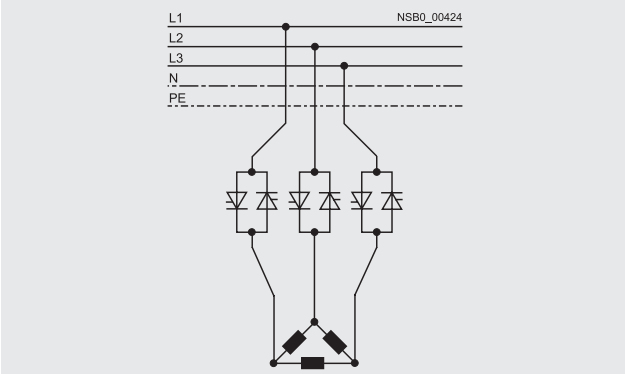

Inline circuit:
Rated current I_e corresponds to the rated motor current I_n,
3 cables to the motor

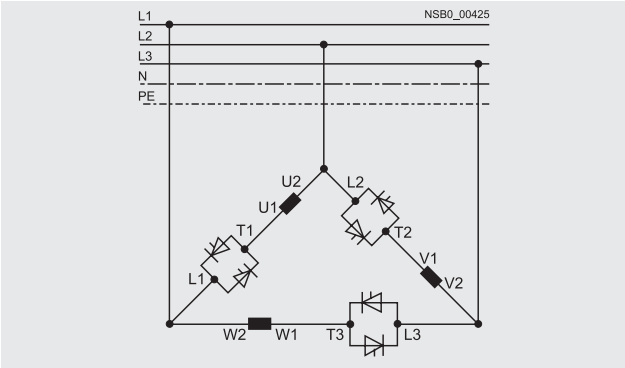

Inside-delta circuit:
Rated current I_e corresponds to approx. 58 % of the rated motor current I_n, 6 cables to the motor (as with wye-delta starters)

Which circuit?

Using the inline circuit involves the lowest wiring outlay. If the soft starter to motor connections are long, this circuit is preferable.
With the inside-delta circuit there is double the wiring complexity but a smaller size of device can be used at the same rating.

Thanks to the choice of operating mode between the inline circuit and inside-delta circuit, it is always possible to select the most favorable solution.

The braking function is possible only in the inline circuit.

Configuration

The 3RW44 solid-state soft starters are designed for normal starting. In case of heavy starting or increased starting frequency, a larger device must be selected.

For long starting times it is recommended to have a PTC sensor in the motor. This also applies for the ramp-down modes smooth ramp-down, pump ramp-down and DC braking, because during the ramp-down time in these modes, an additional current loading applies in contrast to free ramp-down.

In the motor feeder between the SIRIUS 3RW soft starter and the motor, no capacitive elements are permitted (e. g. no reactive-power compensation equipment). In addition, neither static systems for reactive-power compensation nor dynamic PFC (Power Factor Correction) must be operated in parallel during starting and ramp-down of the soft starter. This is important to prevent faults arising on the compensation equipment and/or the soft starter.

All elements of the main circuit (such as fuses and controls) should be dimensioned for direct starting, following the local short-circuit conditions. Fuses, controls and overload relays must be ordered separately.

A bypass contact system and solid-state overload relay are already integrated in the 3RW44 soft starter and therefore do not have to be ordered separately.

The harmonic component load for starting currents must be taken into consideration for the selection of motor starter protectors (selection of release).

Note:
When induction motors are switched on, voltage drops occur as a rule on starters of all types (direct starters, wye-delta starters, soft starters). The infeed transformer must always be dimensioned such that the voltage dip when starting the motor remains within the permissible tolerance. If the infeed transformer is dimensioned with only a small margin, it is best for the control voltage to be supplied from a separate circuit (independently of the main voltage) in order to avoid the potential switching off of the soft starter.

Device interface, PROFIBUS DP communication module, Soft Starter ES parameterizing and operating software

The 3RW44 electronic soft starters have a PC interface for communicating with the Soft Starter ES software or for connecting the external display and operator module. If the optional PROFIBUS communication module is used, the 3RW44 soft starter can be integrated in the PROFIBUS network and communicate using the GSD file or Soft Starter ES Premium software.

The Soft Starter ES parameterizing and operating software can be downloaded from
www.usa.siemens.com > Software with a 14-day trial license.

More information about Soft Starter ES can be found in Chapter 12 of Catalog LV 1.

Manual for SIRIUS 3RW44

Besides containing all important information on configuring, commissioning and servicing, the manual also contains example circuits and the technical specifications for all devices.

Win-Soft Starter selection and simulation program

With this software, you can simulate and select all Siemens soft starters, taking into account various parameters such as mains properties, motor and load data, and special application requirements.

The software is a valuable tool, which makes complicated, lengthy manual calculations for determining the required soft starters superfluous.

The Win-Soft Starter selection and simulation program can be downloaded from: www.usa.siemens.com > Software

More information can be found on the Internet at: www.usa.siemens.com

Dimensional drawings

3RW30 for standard applications

3RW30 1. ... 3RW30 4.

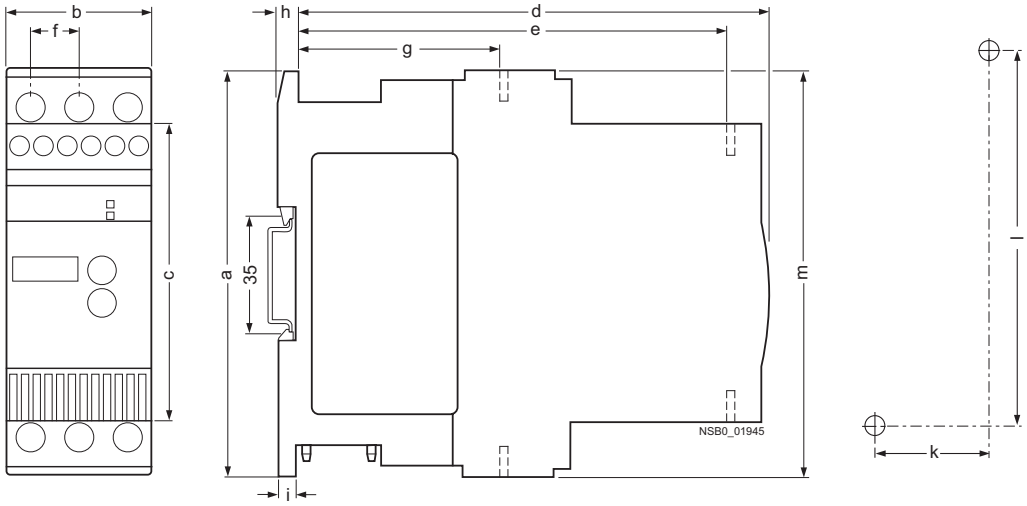

Type/Dimension (mm)	a	b	c	d	e	f	g	h	i	k	l	m
3RW30 1.-1.	95	45	62	146	126	14.4	63	5	6.5	35	85	95
3RW30 1.-2.	95	45	62	146	126	14.4	63	5	6.5	35	85	117.2
3RW30 2.-1.	125	45	92	146	126	14.4	63	5	6.5	35	115	125
3RW30 2.-2.	125	45	92	146	126	14.4	63	5	6.5	35	115	150
3RW30 3.	160	55	110	163	140	18	63	5	6.5	30	150	144
3RW30 4.	170	70	110	181	158	22.5	85	5	10	60	160	160

Clearances to grounded parts (mm)	Lateral	Top	Bottom	Fixing screws	Tightening torques (Nm)
3RW30 1.	5	60	40	M4	1
3RW30 2.	5	60	40	M4	1
3RW30 3.	30	60	40	M4	1
3RW30 4.	30	60	40	M4	2

3RW30 03-1. (screw terminals)

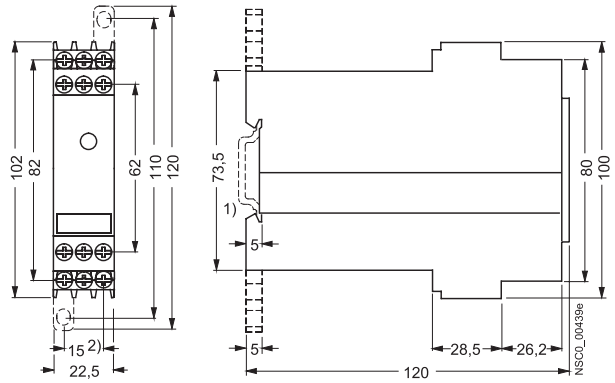

3RW30 03-2. (spring-type terminals)

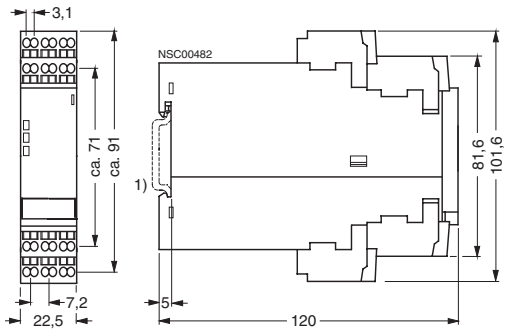

1) For mounting onto standard mounting rail TH 35 according to EN 60715.

2) Dimension for screw fixing.
Screw fixing with two 3RP1 903 push-in lugs per 3RW30 03 device.

3RW40 for standard applications

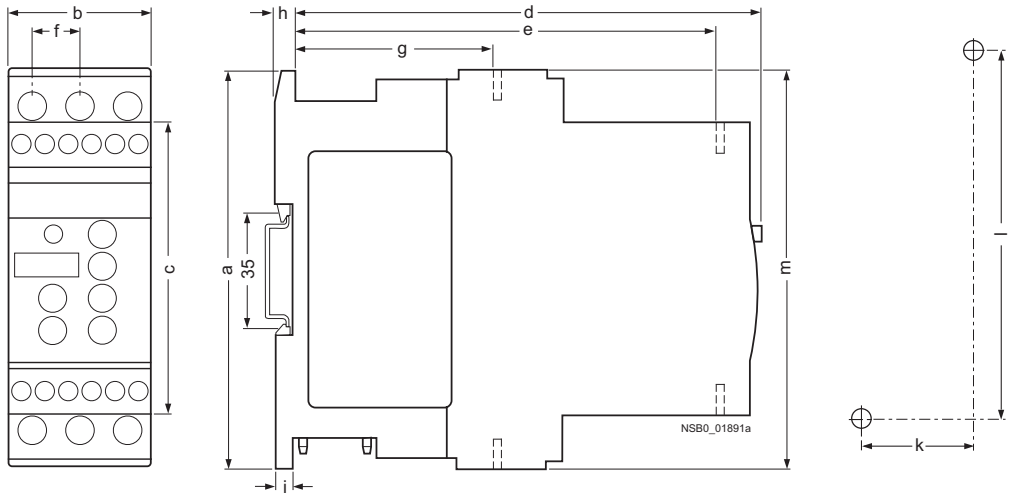

Type/Dimension (mm)	a	b	c	d	e	f	g	h	i	k	l	m
3RW40 2.-1.	125	45	92	149	126	14.4	63	5	6.5	35	115	125
3RW40 2.-2.	125	45	92	149	126	14.4	63	5	6.5	35	115	150
3RW40 3.	170	55	110	165	140	18	63	5	6.5	30	150	144
3RW40 4.	170	70	110	183	158	22.5	85	5	10	60	160	160

Clearances to grounded parts (mm)	Lateral	Top	Bottom	Fixing screws	Tightening torques (Nm)
3RW40 2.	5	60	40	M4	1
3RW40 3.	30	60	40	M4	1
3RW40 4.	30	60	40	M4	2

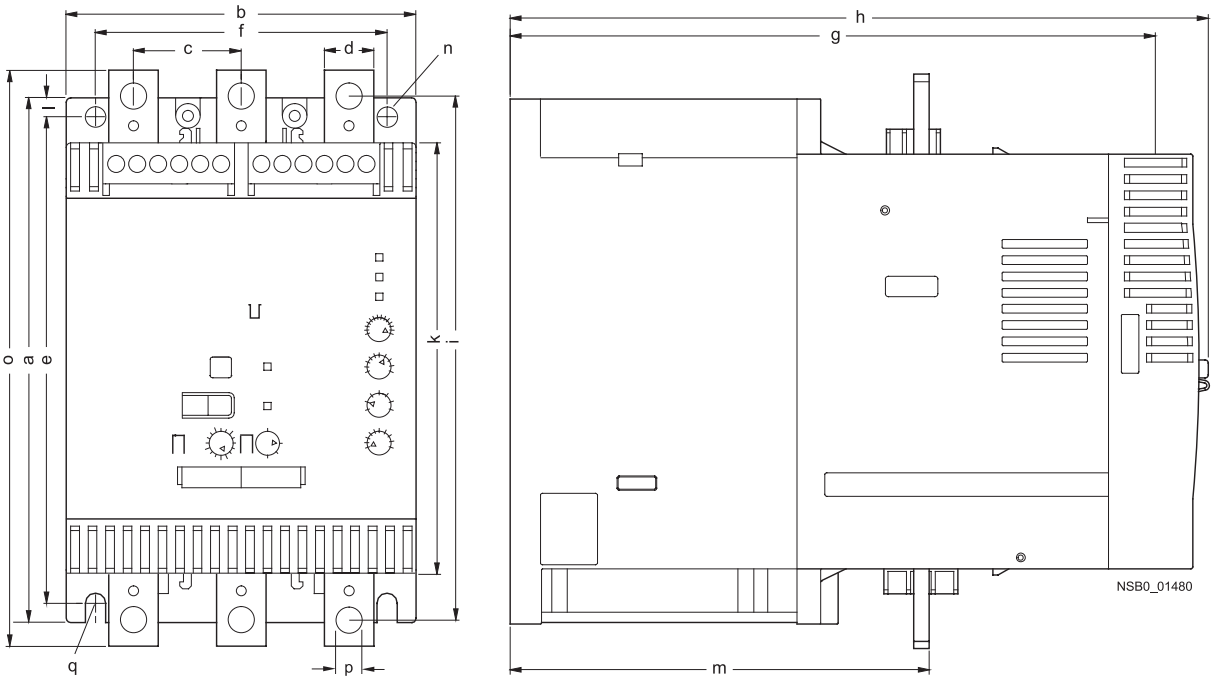

Type/Dimension (mm)	a	b	c	d	e	f	g	h	i	k	l	m	n	o	p	q
3RW40 5.	180	120	37	17	167	100	223	250	180	148	6.5	153	7	198	9	M6, 10 Nm
3RW40 7.	210	160	48	25	190	140	240	278	205	166	10	166	9	230	11	M8, 15 Nm

3RW44 2., 3RW44 3. and 3RW44 4. for High-Feature applications

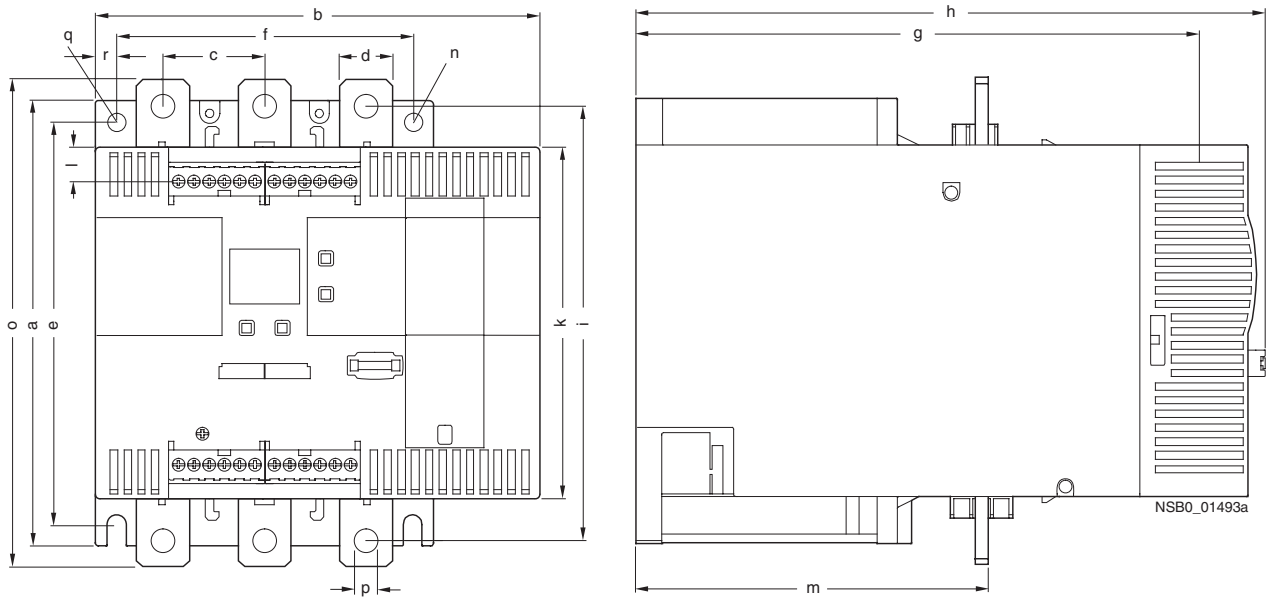

Type/Dimension (mm)	a	b	c	d	e	f	g	h	i	k	l	m	n	o	p	q	r
3RW44 2.	180	170	37	11	167	100	240	270	174	148	7.5	153	7	184	6.6	M6, 10 Nm	10
3RW44 3.	180	170	37	17	167	100	240	270	174	148	7.5	153	7	198	9	M6, 10 Nm	10
3RW44 4.	210	210	48	25	190	140	269	298	205	166	16	166	9	230	11	M8, 15 Nm	10

3RW44 5. and 3RW44 6. for High-Feature applications

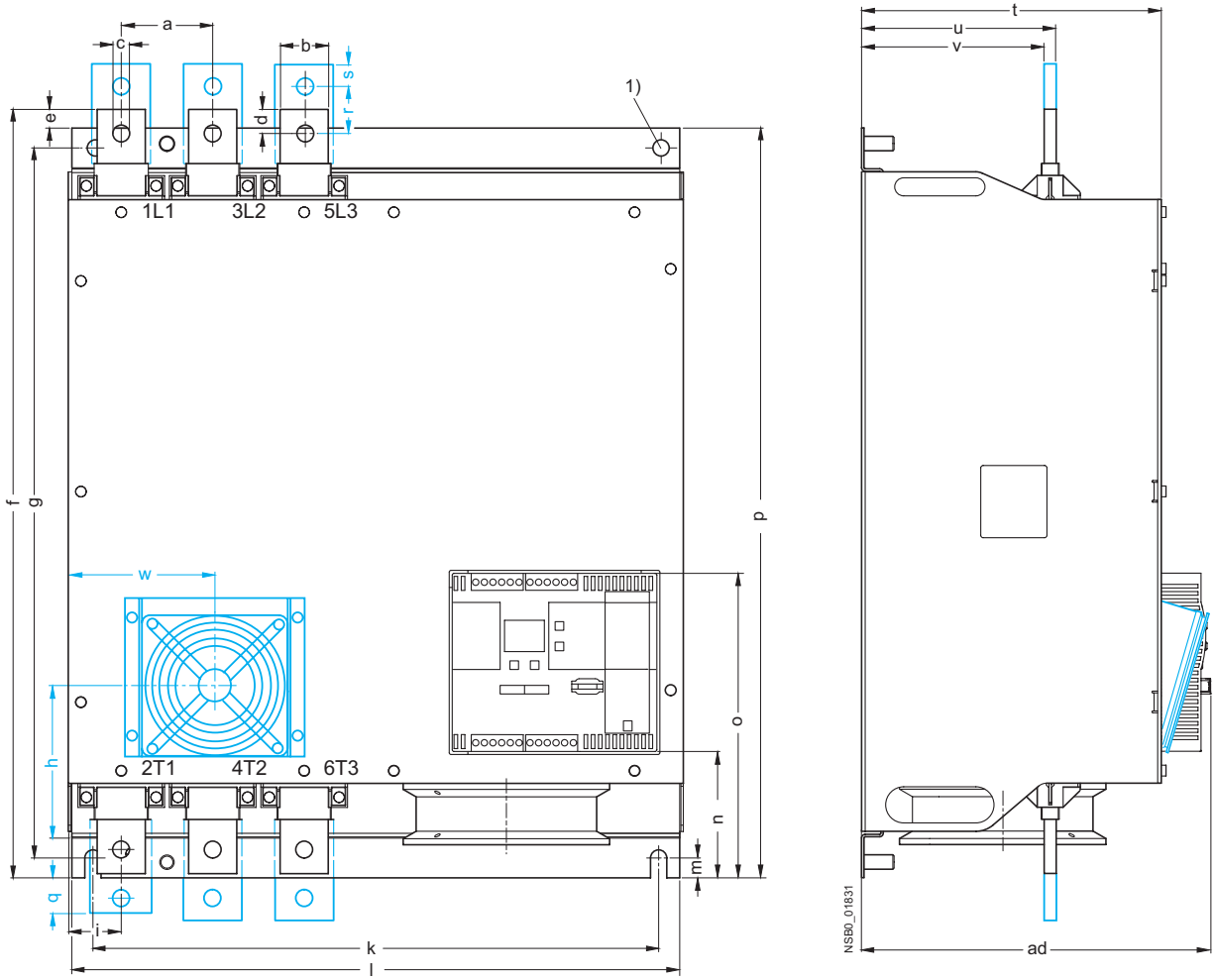

1) For M12 screw, tightening torque max. 35 Nm (310 lb.in).

Type/Dimension (mm)	a	b	c	d	e	f	g	h	i	k	l	m
3RW44 5.	76	40	14	20	15.5	638.5	590	--	44	470	510	16.5
3RW44 6.	85	50	14	--	--	667	660	160	37.5	535	576	16.5

Type/Dimension (mm)	n	o	p	q	r	s	t	u	v	W	ad
3RW44 5.	105	253	623	--	--	--	249	162	152	--	290
3RW44 6.	103	251	693	43.5	40	20	249	162	151.4	123	290

3RW49 00-0AC00 external display and operator module

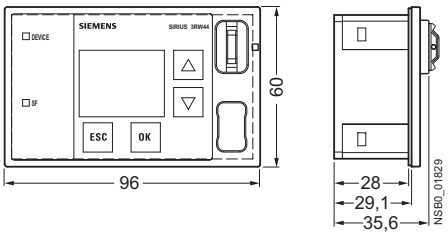

Installation cutout for 3RW49 00-0AC00 external display and operator module

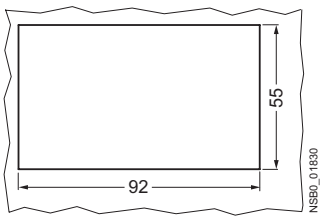

For Operation in the Control Cabinet

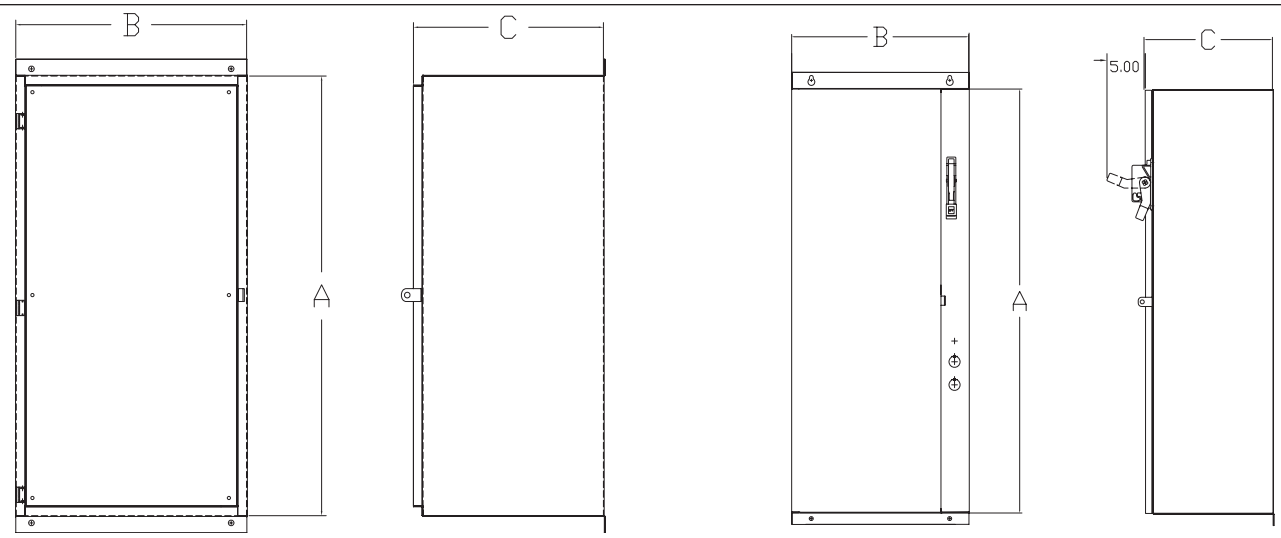

Dimensions are in inches and are for reference only (not for construction). Certain styles may deviate from values indicated.

Non-Combination Class 73

N1, N3R, N12, N4 Standard Enclosure

	Amps	A	B	C
3RW40new	11 - 73	25	18	13
	98	36	23	10
3RW40	117-145	36	18	15
	205-315	36	22	20
	385	54	36	20
3RW44	26 - 68	26	12.5	15
	82 - 117	36	18	15
	145 - 215	36	22	20
	280 - 385	54	36	20
	494 - 780	90	40	20
	970 - 1076	90	50	20

N4X Stainless Steel Standard Enclosure

	Amps	A	B	C
3RW40new	11- 98	55	29	11
3RW40	117	36	18	15
	145 - 205A	36	22	20
	248 - 385	54	36	20
3RW44	26 - 51	26	12.5	15
	68 - 82	36	18	15
	100 - 117	36	22	20
	145 - 385	54	36	20

N1, N3R, N12, N4 Modified Enclosure

	Amps	A	B	C
3RW40	117-385	56	36	20
3RW44	26-51	36	22	20
	68-385	54	36	20

N4X Stainless Steel Modified Enclosure

	Amps	A	B	C
3RW40	117-385	54	36	20
3RW44	26-51	36	22	20
	68-385	54	36	20

① Add 4" for N4.

Combination Type Class 74

N1, N3R, N12, N4 Standard Enclosure

	Amps	A	B	C
3RW40new	11 - 73	36	20	11
	98	46	20	10
3RW40	117	50	25	20
	145 - 205	66	25	20
	248 - 315	90	30	20
	385	90	40	20
3RW44	26 - 68	36	23	15
	82 - 117	50	25	20
	145 - 215	66	25	20
	280	90	30	20
	315 - 384	90	40	20
	494	90	40	20
	551 - 780	90	40①	20
	970 - 1076	90	50	20

N1, N12 Fusible

	Amps	A	B	C
3RW44	494-780	90	50	20

N4X Stainless Steel Standard Enclosure

	Amps	A	B	C
3RW40new	11- 98	55	29	11
3RW40	117 - 145	54	36	20
	205 - 300	90	40	20
3RW44	26 - 42	36	23	15
	51 - 100	50	25	20
	117 - 145	54	36	20
	180 - 385	90	40	20

N1, N3R, N12, N4 Modified Enclosure

	Amps	A	B	C
3RW40	117 - 248	76	30	20
	315	90	30	20
	385	90	40	20
3RW44	26 - 215	76	30	20
	280	90	30	20
	315 - 385	90	40	20

N4X Stainless Steel Modified Enclosure

	Amps	A	B	C
3RW40	117-145	76	30	20
3RW44	26-145	76	30	20

Schematics

3RW30 . . connection examples for control circuit

Control using switches

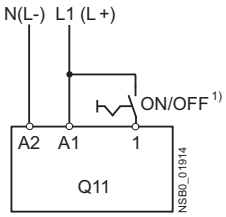

Automatic mode

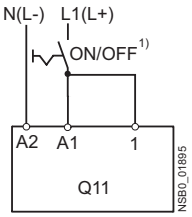

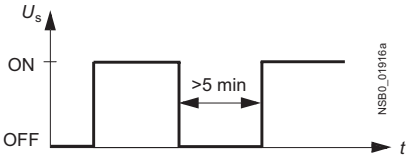

Control by pushbutton

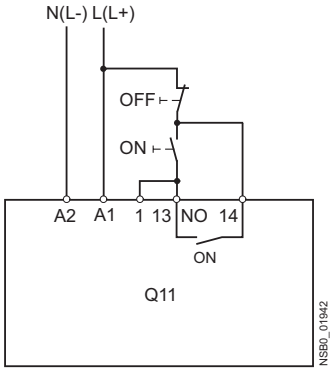

Control of a main contactor

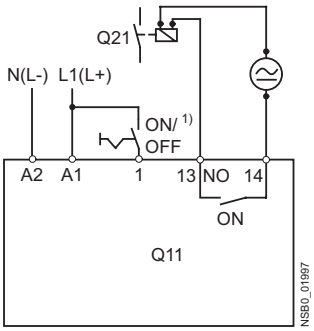

3RW30 connection examples for main circuit[2)]

3RW30 – 3-phase motor with 3NA/3NE fuse

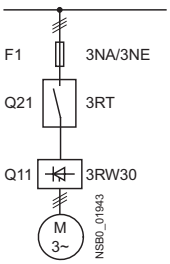

3RV motor starter protector

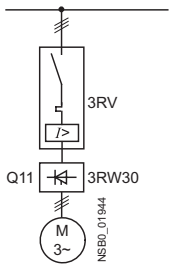

1) **Caution: Risk of restarting!**
When operating with a switch (ON/OFF) a new, automatic restart will take place automatically if the start command is still active at terminal 1.

2) As an alternative, the motor feeder can also be installed as a fuseless or as a fused version. For fuse and switching device coordination, see "Technical specifications".
The wiring diagrams are provided only as examples.

3RW40 2. ... 3RW40 4. connection examples for control circuit

Control using switches

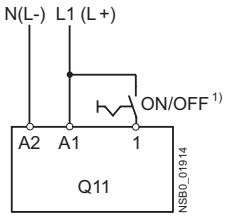

Automatic mode

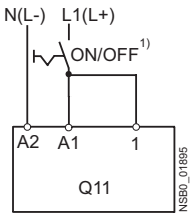

Control with remote reset

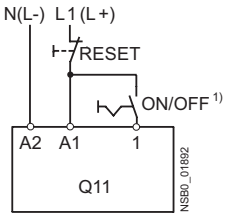

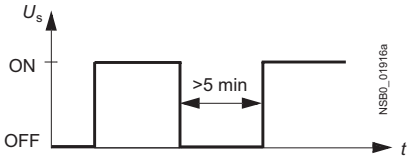

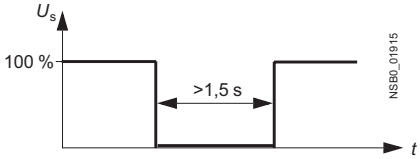

Control of 3RW40 2. ... 3RW40 4. by pushbutton

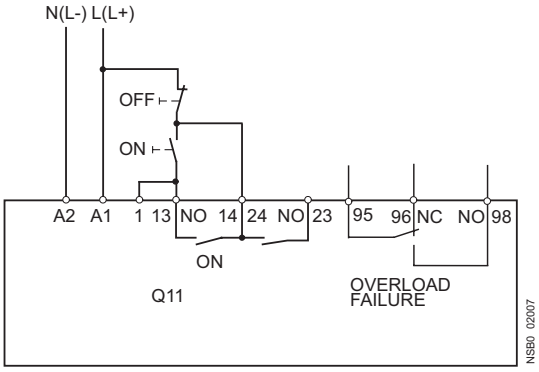

Control of a main contactor

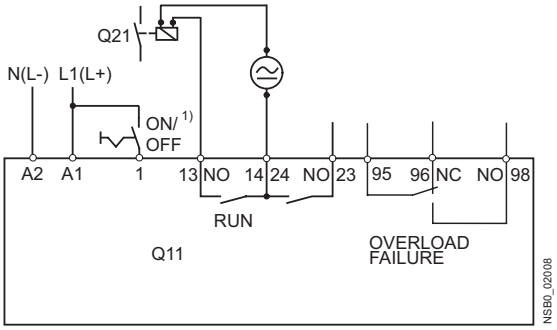

Connection example of 3RW40 2. ... 3RW40 4. for PTC sensors (thermistor motor protection)

Thermoclick

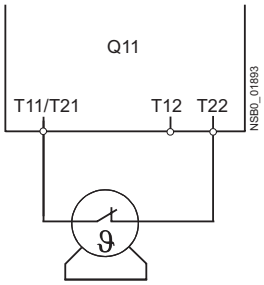

PTC type A

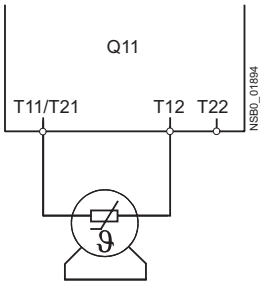

1) **Caution: Risk of restarting!**
When operating with a switch (ON/OFF) a new, automatic restart will take place automatically if the start command is still active at terminal 1.

3RW40 5. and 3RW40 7. connection examples for control circuit

Control by switch using internal 24 V DC supply

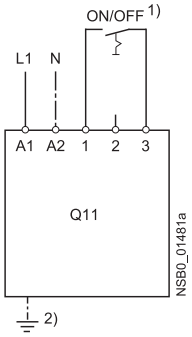

external power supply

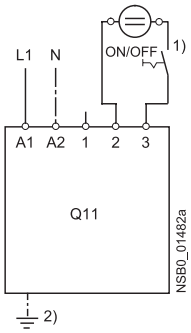

Control by pushbutton

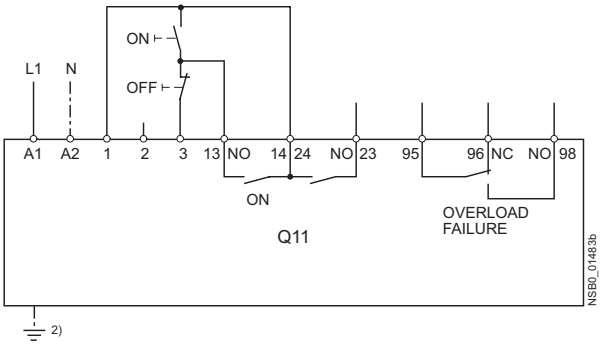

Control of a main contactor

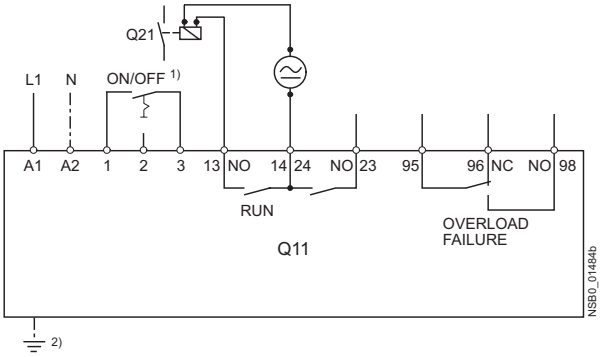

3RW40 connection examples for main circuit[3)]

3RW40 – 3-phase motor with 3NA/3NE fuse

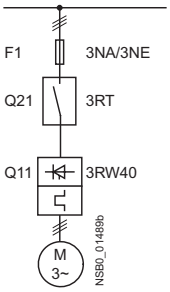

3RV motor starter protector/ 3VL circuit breaker

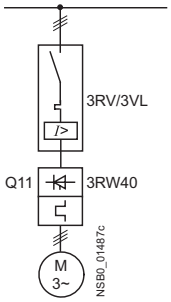

1) **Caution: Risk of restarting!**
When operating with a switch (ON/OFF) a new, automatic restart will take place automatically if the start command is still active at terminal 3.

2) Grounding necessary for fan connection to 3RW40 5...

3) As an alternative, the motor feeder can also be installed as a fuseless or as a fused version. For fuse and switching device coordination, see "Technical specifications".
The wiring diagrams are provided only as examples.

3RW44 connection examples for main and control circuits

Main circuit

Possibility 1a:
Inline circuit with motor starter protector and SITOR fuse (semiconductor protection only)

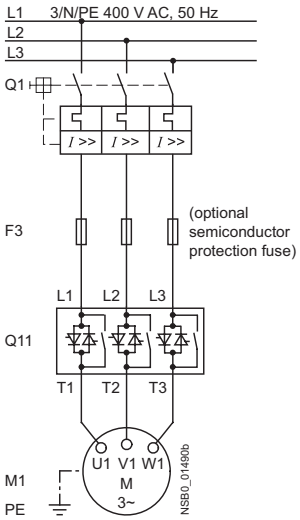

Control circuit

Possibility 1:
Control by pushbutton

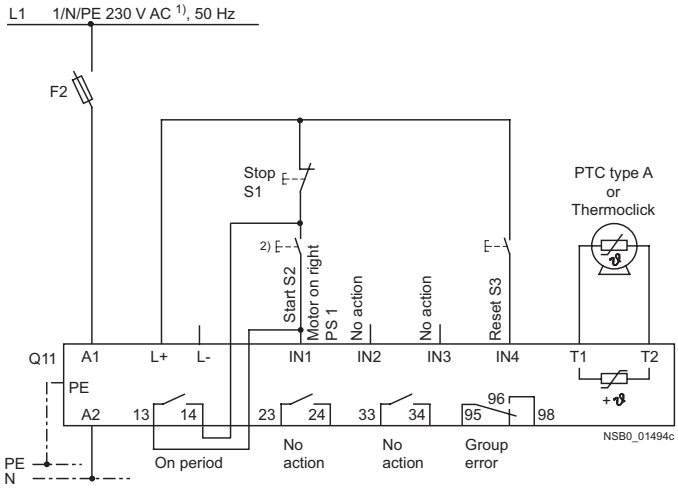

Main circuit

Possibility 1b:
Inline circuit with all-range protection
(line and semiconductor protection)

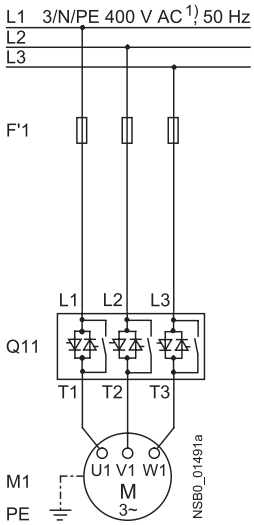

Possibility 1c:
Inline circuit with line and SITOR fuse
(semiconductor protection only)

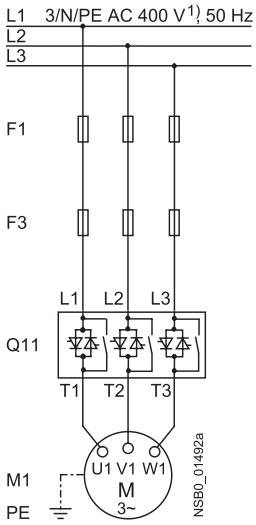

1) Permissible values for main and control voltage, see "Technical specifications".

2) **Caution: Risk of restarting!**
Because the output is parameterized to "Motor ON", the start command is automatically active after the reset command and a new, automatic restart will take place. This applies especially in case of motor protection tripping. For safety reasons we recommend connecting the group error output (terminals 95/96) in series with the output parameterized to "Motor ON".

Main circuit

Possibility 2:
Inline circuit with main contactor

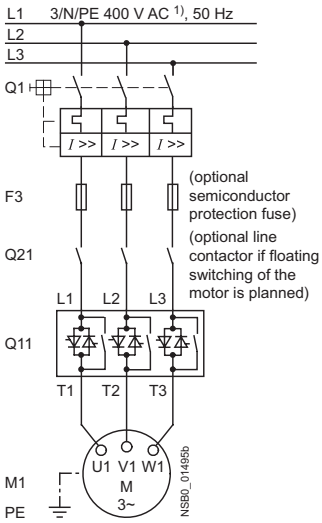

Control circuit

Possibility 2:
Control of a main contactor and control by means of PLC

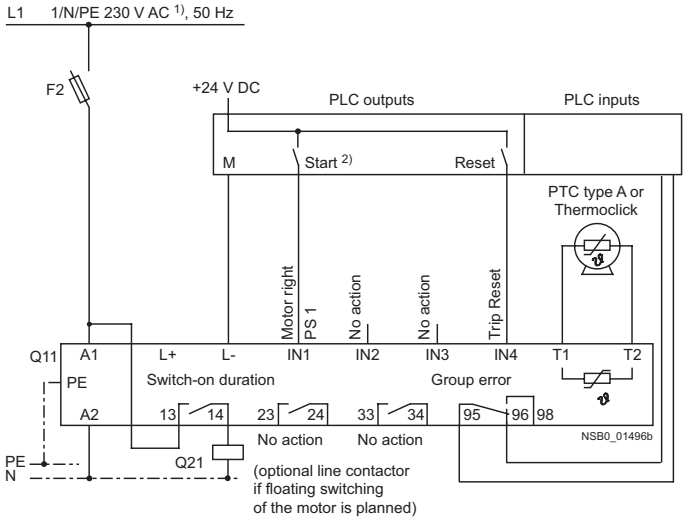

1) Permissible values for main and control voltage, see "Technical specifications".

2) **Caution: Risk of restarting!**
The start command (e. g. from the PLC) must be reset prior to a reset command because a new, automatic restart will take place automatically if a start command is active after the reset command. This applies especially in case of motor protection tripping.
For safety reasons we recommend incorporating the group error output (terminals 95 and 96) in the controller.

Main circuit

Possibility 3a:
Inline circuit with ramp-down function DC braking[3)]
(for device types 3RW44 22 to 3RW44 25)

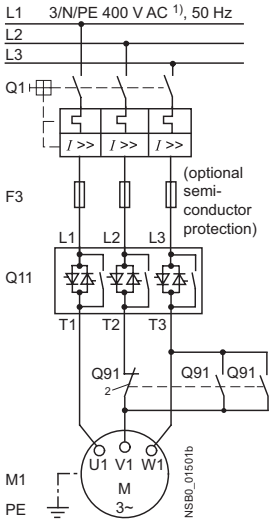

Control circuit

Possibility 3a:
Control of the DC braking contactor[3)]

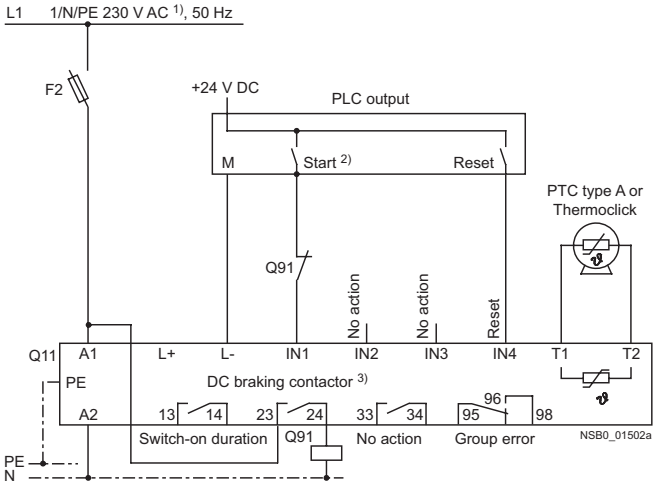

Main circuit

Possibility 3b:
Inline circuit with ramp-down function DC braking[3)]
(for device types 3RW44 26 to 3RW44 47)

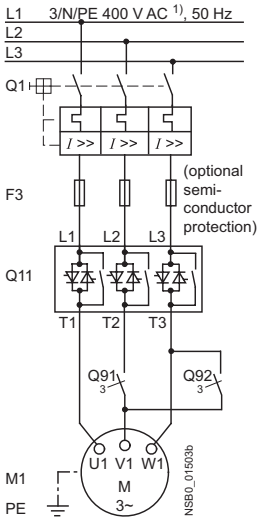

Control circuit

Possibility 3b:
Control of the DC braking contactor[3)]

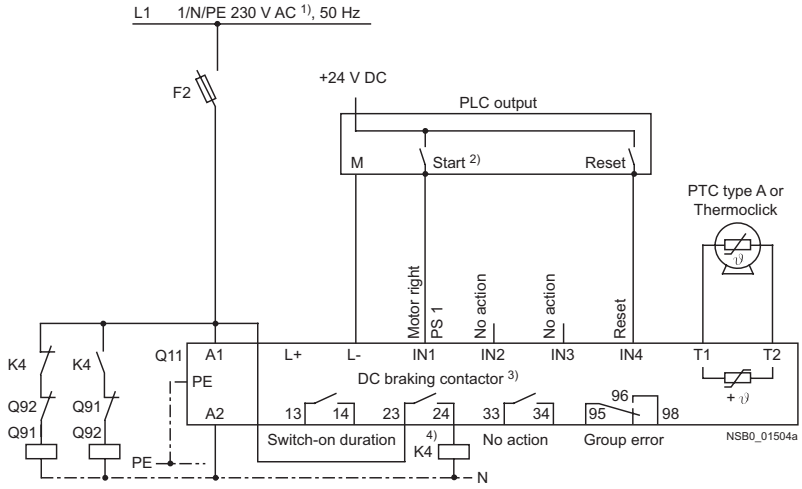

1) Permissible values for main and control voltage, see "Technical specifications".

2) **Caution: Risk of restarting!**
The start command (e. g. from the PLC) must be reset prior to a reset command because a new, automatic restart will take place automatically if a start command is active after the reset command. This applies especially in case of motor protection tripping.
For safety reasons we recommend incorporating the group error output (terminals 95 and 96) in the controller.

3) If the ramp-down function "Combined braking" is selected, no braking contactor is required.
If the ramp-down function "DC braking" is selected, a braking contactor must be used in addition. For type see "Fuse Assignment (Inline Circuit)" on pages 17-241 to 17-243.
For applications with large centrifugal masses ($J_{Load} > J_{Motor}$) we recommend the function "DC braking".
The output 2 must be switched over to "DC braking contactor".

4) Auxiliary relay K4, e. g.:
LZX:RT4A4T30 (230 V AC rated control supply voltage),
LZX:RT4A4S15 (115 V AC rated control supply voltage).

Main circuit

Possibility 4a:
Inside-delta circuit

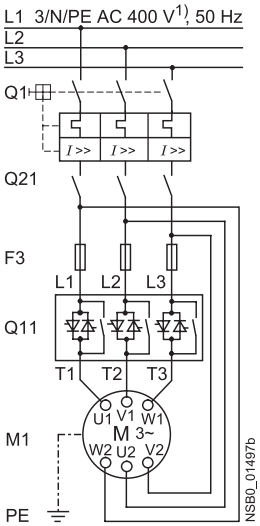

Possibility 4b:
Change of direction of rotation for inside-delta circuit

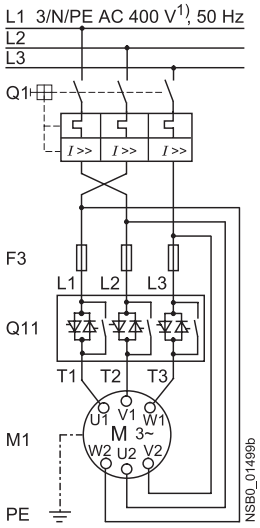

Control circuit

Possibility 4:
Control by means of PLC

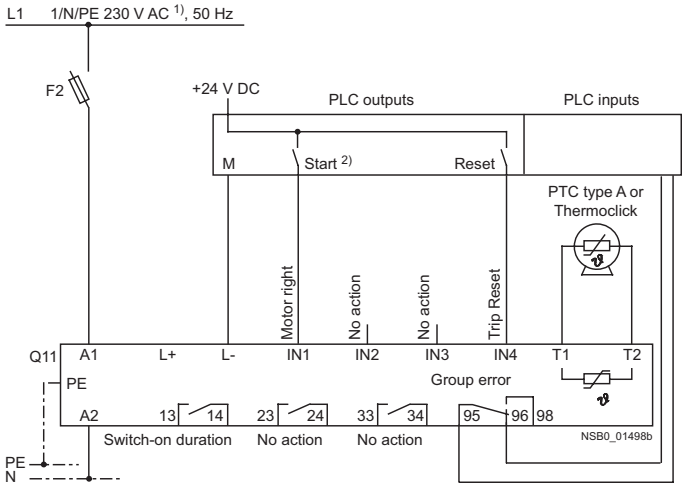

1) Permissible values for main and control voltage, see "Technical specifications".

2) **Caution: Risk of restarting!**
The start command (e. g. from the PLC) must be reset prior to a reset command because a new, automatic restart will take place automatically if a start command is active after the reset command. This applies especially in case of motor protection tripping.
For safety reasons we recommend incorporating the group error output (terminals 95 and 96) in the controller.

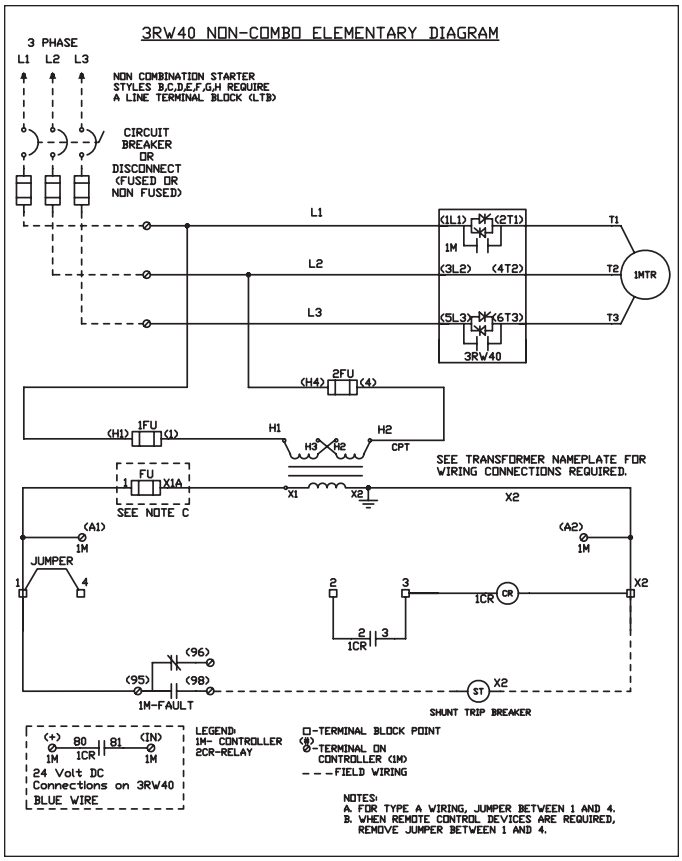
3RW40 NON-COMBO ELEMENTARY DIAGRAM
3 PHASE
L1 L2 L3
NON COMBINATION STARTER STYLES B,C,D,E,F,G,H REQUIRE A LINE TERMINAL BLOCK (LTB)
CIRCUIT BREAKER OR DISCONNECT (FUSED OR NON FUSED)
3RW40
1MTR
2FU
1FU
CPT
SEE TRANSFORMER NAMEPLATE FOR WIRING CONNECTIONS REQUIRED.
SEE NOTE C
JUMPER
1M-FAULT
SHUNT TRIP BREAKER
24 Volt DC Connections on 3RW40 BLUE WIRE
LEGEND: 1M- CONTROLLER 2CR-RELAY
□-TERMINAL BLOCK POINT
-TERMINAL ON CONTROLLER (1M)
- - - FIELD WIRING
NOTES:
A. FOR TYPE A WIRING, JUMPER BETWEEN 1 AND 4.
B. WHEN REMOTE CONTROL DEVICES ARE REQUIRED, REMOVE JUMPER BETWEEN 1 AND 4.

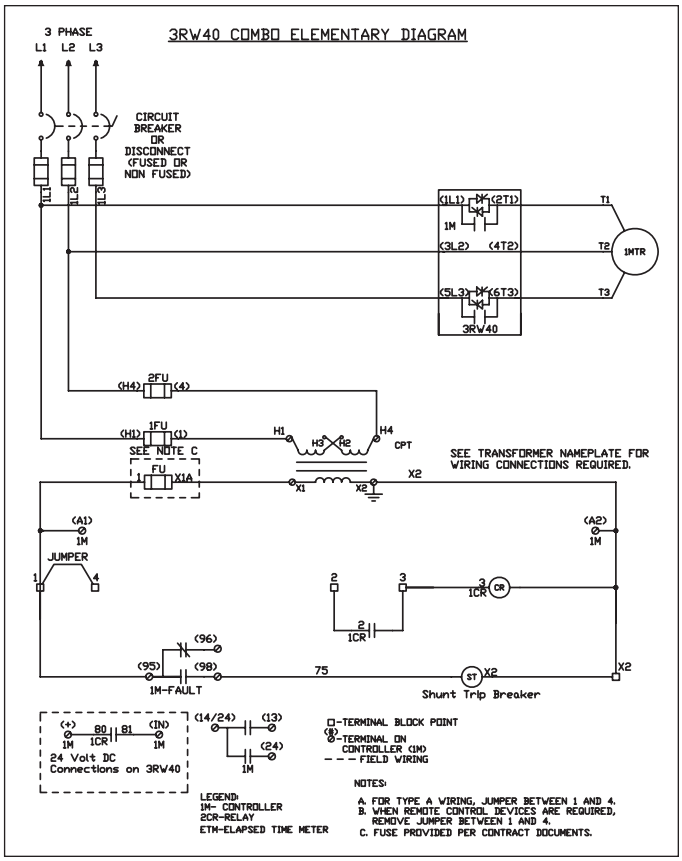
3RW40 COMBO ELEMENTARY DIAGRAM
3 PHASE
L1 L2 L3
CIRCUIT BREAKER OR DISCONNECT (FUSED OR NON FUSED)
3RW40
1MTR
2FU
1FU
CPT
SEE NOTE C
SEE TRANSFORMER NAMEPLATE FOR WIRING CONNECTIONS REQUIRED.
JUMPER
1M-FAULT
Shunt Trip Breaker
24 Volt DC Connections on 3RW40
LEGEND: 1M- CONTROLLER 2CR-RELAY ETM-ELAPSED TIME METER
□-TERMINAL BLOCK POINT
-TERMINAL ON CONTROLLER (1M)
- - - FIELD WIRING
NOTES:
A. FOR TYPE A WIRING, JUMPER BETWEEN 1 AND 4.
B. WHEN REMOTE CONTROL DEVICES ARE REQUIRED, REMOVE JUMPER BETWEEN 1 AND 4.
C. FUSE PROVIDED PER CONTRACT DOCUMENTS.

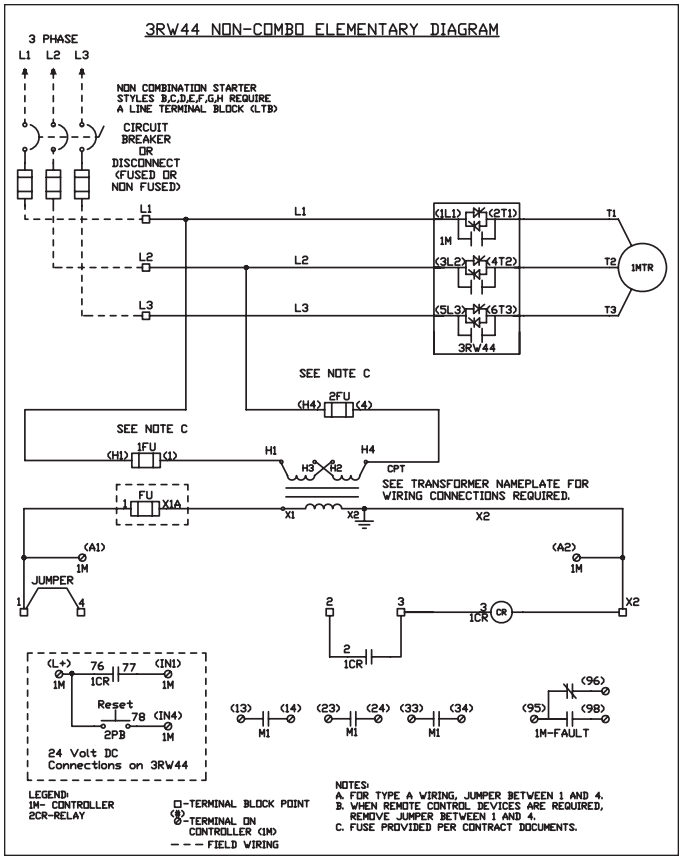
3RW44 NON-COMBO ELEMENTARY DIAGRAM
3 PHASE
L1 L2 L3
NON COMBINATION STARTER STYLES B,C,D,E,F,G,H REQUIRE A LINE TERMINAL BLOCK (LTB)
CIRCUIT BREAKER OR DISCONNECT (FUSED OR NON FUSED)
3RW44
1MTR
SEE NOTE C
2FU
1FU
CPT
SEE TRANSFORMER NAMEPLATE FOR WIRING CONNECTIONS REQUIRED.
JUMPER
Reset
24 Volt DC Connections on 3RW44
1M-FAULT
LEGEND: 1M- CONTROLLER 2CR-RELAY
□-TERMINAL BLOCK POINT
-TERMINAL ON CONTROLLER (1M)
- - - FIELD WIRING
NOTES:
A. FOR TYPE A WIRING, JUMPER BETWEEN 1 AND 4.
B. WHEN REMOTE CONTROL DEVICES ARE REQUIRED, REMOVE JUMPER BETWEEN 1 AND 4.
C. FUSE PROVIDED PER CONTRACT DOCUMENTS.

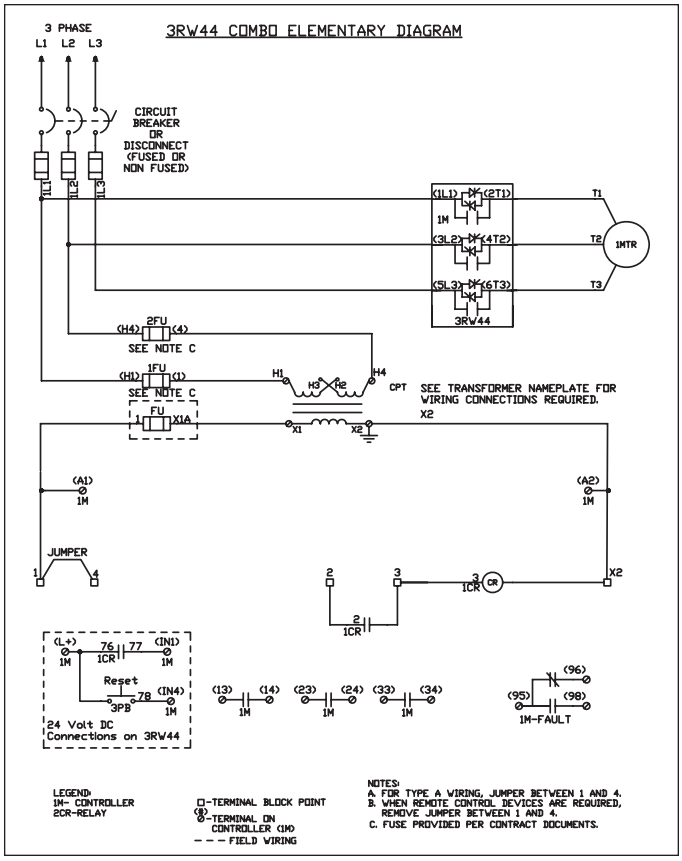
3RW44 COMBO ELEMENTARY DIAGRAM
3 PHASE
L1 L2 L3
CIRCUIT BREAKER OR DISCONNECT (FUSED OR NON FUSED)
3RW44
1MTR
2FU
1FU
CPT
SEE NOTE C
SEE TRANSFORMER NAMEPLATE FOR WIRING CONNECTIONS REQUIRED.
JUMPER
Reset
24 Volt DC Connections on 3RW44
1M-FAULT
LEGEND: 1M- CONTROLLER 2CR-RELAY
□-TERMINAL BLOCK POINT
-TERMINAL ON CONTROLLER (1M)
- - - FIELD WIRING
NOTES:
A. FOR TYPE A WIRING, JUMPER BETWEEN 1 AND 4.
B. WHEN REMOTE CONTROL DEVICES ARE REQUIRED, REMOVE JUMPER BETWEEN 1 AND 4.
C. FUSE PROVIDED PER CONTRACT DOCUMENTS.

Benefits

Design

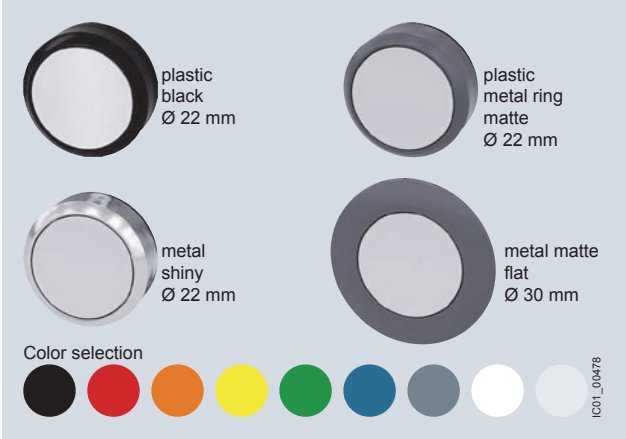

SIRIUS ACT is available in four design lines.

Communication

- Direct connection of the enclosure to AS-Interface or IO-Link
- Direct connection in the control cabinet to PROFINET, IO-Link or AS-Interface
- Can be integrated easily via the TIA Portal

Ruggedness

- Degree of protection IP66, IP67, IP69 (IP69K)

IP66	
6 = Protection against the ingress of dust	6 = Protection against powerful splash-water
IP67	
6 = Protection against the ingress of dust	7 = Protection against temporary immersion
IP69 (IP69K)	
6 = Protection against the ingress of dust	9/9K = Protection against water in high-pressure cleaning (approx. 80 bar) and high water jet temperatures (approx. 80 °C)

- Service life of 100 000 hours thanks to use of LEDs
- Media resistance (chemicals) thanks to solid stainless steel and high-grade plastics
- Mechanical endurance of 10 x 10^6 switching cycles
- Suitable for use in extreme environments
- Reliable, friction-locked fixing with just one screw
- Design stability according to use
- Simple geometry for mounting holes

Easy handling

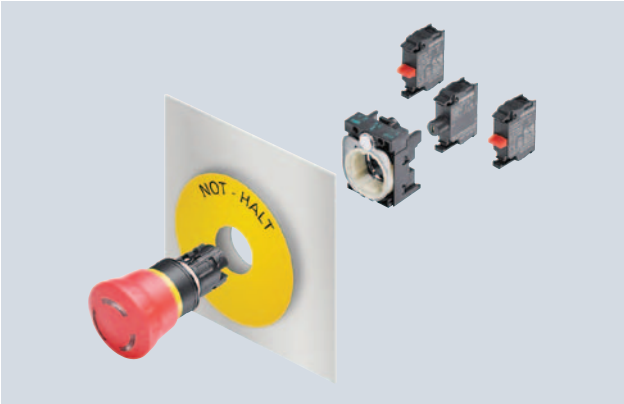

- Self-holding function of the actuator when mounting
- Twist prevention integrated into patented holder design
- Stackable contact modules
- Self-explanatory and fast installation using one hand
- Components can be mounted with holder removed
- No special tools required, simple size 2 screwdriver (cross-tip DIN ISO 87641PZD1, flat-head DIN ISO 2380-1 A/B 1x4.5) is sufficient

These two pages are a brief overview of the SIRIUS ACT 3SU Series. Please consult the Siemens Industrial Control products catalog for a complete listing of products or look for info online at usa.siemens.com/sirius-act

Actuating and signaling elements

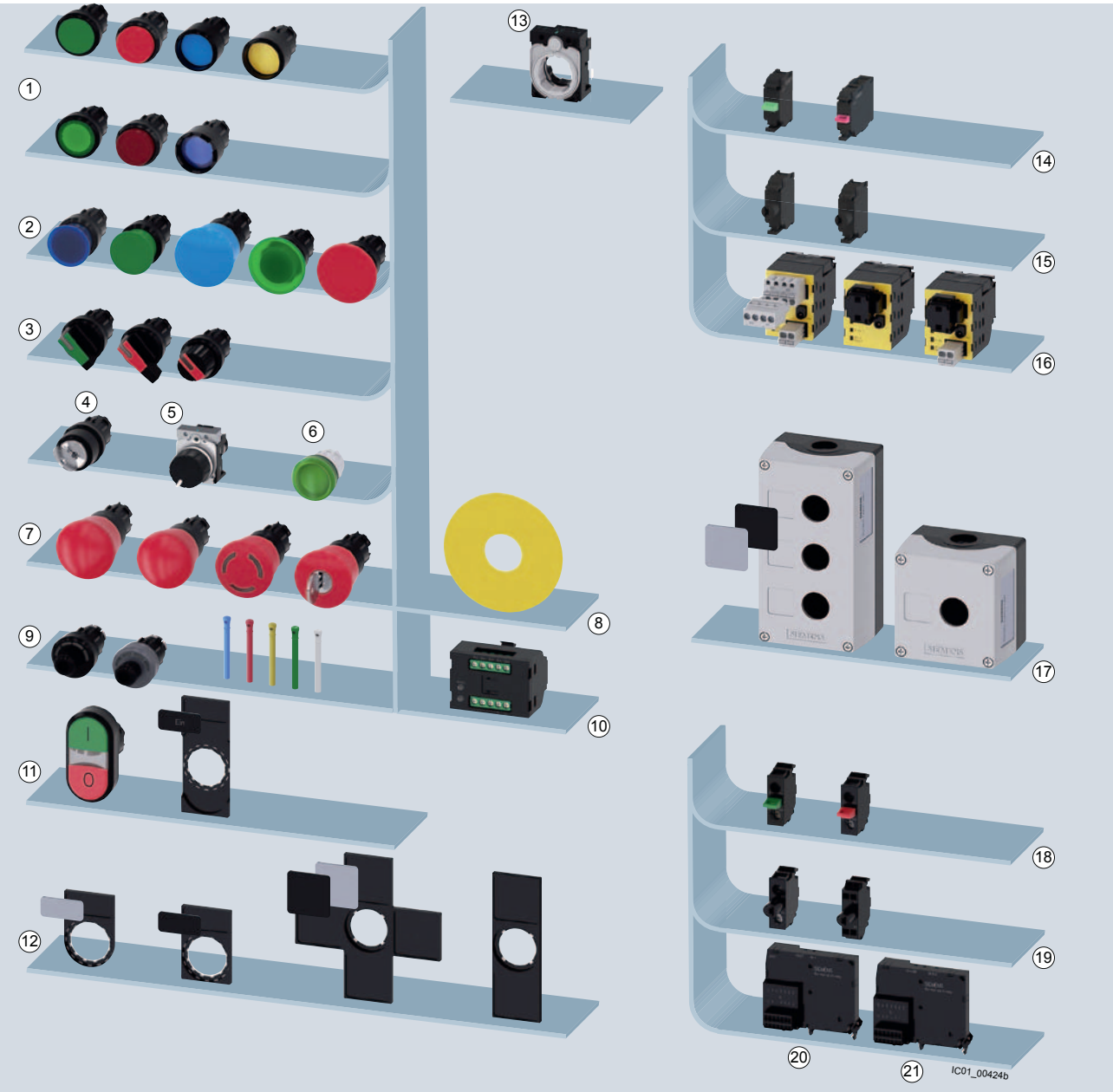

Actuating and signaling elements		Pages
①	Pushbuttons, illuminated pushbuttons	10/37
②	Mushroom pushbuttons	10/39
③	Selector switches	10/40
④⑤⑥	Key-operated switches, potentiometers, indicator lights	10/41
⑦⑧	EMERGENCY STOP mushroom pushbuttons, backing plates	10/39
⑨⑩	ID key-operated switches, ID keys, electronic modules	10/55
⑪	Twin pushbuttons, label holders, labeling plates	10/47
⑫	Label holders, labeling plates	10/122
Holders and labels		**Pages**
⑬	Holders	10/122

Modules for front plate mounting		Pages
⑭	Contact modules	10/104
⑮	LED modules	10/106
⑯	AS-Interface modules	10/108
Enclosures		**Pages**
⑰	Enclosures	10/110
Modules for base mounting		**Pages**
⑱	Contact modules	10/118
⑲	LED modules	10/118
⑳	IO-Link modules	10/120
㉑	AS-Interface modules	10/120

System overview of SIRIUS ACT pushbuttons and indicator lights from the plastic design line.
Pushbuttons and indicator lights available in 4 design lines.

Page links above reference the U.S. Industrial Controls catalog available online

Features

- Snap In Legend Inserts
- Flush and Surface Mounted Types
- Convertible Selector
- Double Break Contacts
- Dual Voltage Pilot Light with Snap In Lens
- Conversion Kits
- UL Listed File #E22655
- CSA Certified File #LR6535

Application

Standard duty control stations are used with magnetic controllers to control the starting, stopping, reversing or speed of applicable motors.

Stations are assembled of one, two or three push button, selector switch or pilot light units in a variety of combinations to provide compact control units for remote control of magnetic starters and contactors.

Station enclosures are available in Type 1 surface mounted, 1B flush plate mounted and 4 watertight.

Features

Type 1 surface mounted bases are constructed of 14 gauge sheet steel, primed and finished in baked gray enamel. The base is predrilled to receive a variety of contact blocks, pilot lights and accessory devices. Covers are of 20 gauge sheet steel, wrap- around construction, primed and finished in baked gray enamel. Siemens Type 4 watertight heavy duty push button stations are supplied with a provision to padlock the stop button in the depressed position. Enclosures are predrilled and tapped for 3/4" conduit.

Contact blocks have double break, fine silver contacts with a NEMA B600 rating. Type 4 stations have a NEMA A600 rating.

The pilot light assembly is dual voltage with clearly marked pressure type terminals for 120 volt or 240 volt connection.

The lens of the pilot light snaps into the cover and is available in both red and green.

Push buttons are equipped with an operator into which a selected legend insert is snapped. Legend inserts are molded thermoplastic and come in a wide variety of legends and colors.

The selector switch operator can be instantly set for two or three positions at any time.

Mushroom Head

50ZMH mounts on any standard push button operator. The Mushroom Head is red molded thermoplastic, 1 1/2" in diameter, and provides a large operator for emergency stop or similar applications.

Mechanical Interlock

50ZAM is a base mounted zinc plate, dichromate dipped, steel assembly. When mounted in conjunction with Duplex Contact Block 50ZAC3 (one NO and one NO) the interlock prevents one contact from being closed while the other contact is closed.

Padlock Attachment Kit

50ZAL can be mounted to any Type 1 surface mounted station by the lower screw which fastens the cover to the station base. Made of heavy steel, chrome plated, the attachment provides for the padlocking of a push button in the depressed position or a selector switch in any position. When used with a push button operator, raised Legend Insert D53493003 (Red Stop) must be used.

Electrical Ratings

NEMA AC Ratings 50/60Hz

Nema B600 5 Continuous Amps

Volts	Make	Break
120	30	3
240	15	1.5
480	7.5	0.75
600	6	0.6
VA	3600	360

Ordering Information

- Legend Inserts see page 17-307.
- Accessories see page 17-307.

2 Push Buttons
Surface Mounting, NEMA 1

2 Push Buttons
Flush Mounting, NEMA 1B

1 Push Button
Surface Mounting

1 Selector Switch
Flush Mounting

2 Push Buttons
1 Selector Switch

1 Pilot Light
2 Push Buttons

Selection and ordering data

	Operator identification	Degree of protection	Contacts / voltage	Number of command points	Order No.	Packs Unit
1 unit surface mount-momentary pushbutton	A = Momentary flush pushbutton green, surface, label "START"	NEMA 1	1NO - 1NC with common jumper (50ZAC1)	1	**50AA3D**	1
	A = Momentary flush pushbutton red, surface, label "STOP"	NEMA 1	1NO - 1NC with common jumper (50ZAC1)	1	**50AA3E**	1
	A = Momentary raised pushbutton red, surface, label "STOP"	NEMA 1	1NO - 1NC with common jumper (50ZAC1)	1	**50AA3F**	1
	A = Momentary mushroom head red, surface, label "STOP"	NEMA 1	1NO - 1NC with common jumper (50ZAC1)	1	**50AA3G**	1
	A = Momentary flush pushbutton less insert, surface	NEMA 1	1NO - 1NC with common jumper (50ZAC1)	1	**50AA3A**	1
	A = 3 position selector switch, surface, label "HAND-OFF-AUTO"	NEMA 1	2 NO 2SPST (50ZAC8)	1	**50AA3C3**	1
	A = 2 position selector switch, surface, label "Off-On"	NEMA 1	2 NO 2SPST (50ZAC8)	1	**50AA3C6**	1
	A = 2/3 selector switch, surface, multiple legends	NEMA 1	2 NO 2SPST (50ZAC8)	1	**50AA3B9**	1
	A = Indicator light, red, surface	NEMA 1	120/240V dual voltage 120PSB lamp	1	**50BA3Y**	1
	A = Indicator light, green, surface	NEMA 1	120/240V dual voltage 120PSB lamp	1	**50BA3Z**	1
	A = Indicator light, less lens, surface	NEMA 1	120/240V dual voltage 120PSB lamp	1	**50BA32**	1
	A = Momentary flush pushbutton green, flush, label "START"	NEMA 1B	1NO - 1NC with common jumper (50ZAC1)	1	**50AA2D**	1
1 unit flush mount-momentary pushbutton	A = Momentary flush pushbutton red, flush, label "STOP"	NEMA 1B	1NO - 1NC with common jumper (50ZAC1)	1	**50AA2E**	1
	A = Momentary raised pushbutton red, flush, label "STOP"	NEMA 1B	1NO - 1NC with common jumper (50ZAC1)	1	**50AA2F**	1
	A = Momentary flush pushbutton less insert, flush	NEMA 1B	1NO - 1NC with common jumper (50ZAC1)	1	**50AA2A**	1
	A = Momentary flush pushbutton less insert, flush, chrome plate	NEMA 1B	1NO - 1NC with common jumper (50ZAC1)	1	**50AA6A**	1
	A = 3 position selector switch, flush, label "HAND-OFF-AUTO"	NEMA 1B	2 NO 2SPST (50ZAC8)	1	**50AA2C3**	1
	A = 3 position selector switch, flush, label "Off-On"	NEMA 1B	2 NO 2SPST (50ZAC8)	1	**50AA2C6**	1
	A = 2/3 selector switch, multiple legends, flush	NEMA 1B	2 NO 2SPST (50ZAC8)	1	**50AA2B9**	1
	A = 2/3 selector switch, multiple legends, chrome plate, flush	NEMA 1B	2 NO 2SPST (50ZAC8)	1	**50AA6B9**	1
	A = Indicator light, red, flush	NEMA 1B	120/240V dual voltage	1	**50BA2Y**	1
	A = Indicator light, green, flush	NEMA 1B	120/240V dual voltage	1	**50BA2Z**	1
	A = Indicator light, less lens, flush	NEMA 1B	120/240V dual voltage	1	**50BA22**	1
	A = Indicator light, less lens, chrome plate, flush	NEMA 1B	120PSB lamp	1	**50BA62**	1
2 unit surface mount-momentary pushbutton	B = Momentary pushbutton green, surface, label "START" A = Momentary pushbutton red, surface, label "STOP"	NEMA 1	1NO, 1NC (50ZAC2)	2	**50CA3DE**	1
	B = Momentary pushbutton green, surface, label "START" A = Momentary raised pushbutton red, surface, label "STOP"	NEMA 1	1NO, 1NC (50ZAC2)	2	**50CA3DF**	1
	B = Momentary pushbutton green, surface, label "START" A = Momentary mushroom head pushbutton red, surface, label "STOP"	NEMA 1	1NO, 1NC (50ZAC2)	2	**50CA3DG**	1
	B = Momentary pushbutton, less insert, surface A = Momentary pushbutton, less insert, surface	NEMA 1	1NO, 1NC (50ZAC2)	2	**50CA3AA**	1
	B = Momentary pushbutton, surface, label "FORWARD" A = Momentary pushbutton, surface, label "REVERSE"	NEMA 1	2 NO (50ZAC3)	2	**50DA3KL**	1

Selection and ordering data

	Operator identification	Degree of protection	Contacts / voltage	Number of command points	Order No.	Packs Unit
2 unit surface mount-momentary pushbutton	B = Momentary pushbutton, surface, label "OPEN" A = Momentary pushbutton, surface, label "CLOSE"	NEMA 1	2 NO (50ZAC3)	2	**50DA3HJ**	1
	B = Momentary pushbutton, surface, label "UP" A = Momentary pushbutton, surface, label "DOWN"	NEMA 1	2 NO (50ZAC3)	2	**50DA3NP**	1
	B = Momentary pushbutton, surface, less insert A = Momentary pushbutton, surface, less insert	NEMA 1	2 NO (50ZAC3)	2	**50DA3AA**	1
	B = Momentary pushbutton, surface, label "FORWARD" A = Momentary pushbutton, surface, label "REVERSE"	NEMA 1	2 NO mechanically inter-locked (50ZA3C w/ 50ZAM)	2	**50RA3KL**	1
	B = Momentary pushbutton, surface, label "OPEN" A = Momentary pushbutton, surface, label "CLOSE"	NEMA 1	2 NO mechanically inter-locked (50ZA3C w/ 50ZAM)	2	**50RA3HJ**	1
	B = Momentary pushbutton, surface, label "UP" A = Momentary pushbutton, surface, label "DOWN"	NEMA 1	2 NO mechanically inter-locked (50ZA3C w/ 50ZAM)	2	**50RA3NP**	1
	B = Momentary pushbutton, surface, label "ON" A = Momentary pushbutton, surface, label "OFF"	NEMA 1	2 NO mechanically inter-locked (50ZA3C w/ 50ZAM)	2	**50RA334**	1
	B = Momentary pushbutton, less insert surface A = Momentary pushbutton, less insert, surface	NEMA 1	2 NO mechanically inter-locked (50ZA3C w/ 50ZAM)	2	**50RA3AA**	1
	B = Momentary pushbutton, surface, label "FORWARD" A = Momentary pushbutton, surface, label "REVERSE"	NEMA 1	2 NO, 2 NC (2 - 50ZAC2)	2	**50EA3KL**	1
	B = Momentary pushbutton, surface, label "OPEN" A = Momentary pushbutton, surface, label "CLOSE"	NEMA 1	2 NO, 2 NC (2 - 50ZAC2)	2	**50EA3HJ**	1
	B = Momentary pushbutton, surface, label "UP" A = Momentary pushbutton, surface, label "DOWN"	NEMA 1	2 NO, 2 NC (2 - 50ZAC2)	2	**50EA3NP**	1
	B = Momentary pushbutton, surface, label "ON" A = Momentary pushbutton, surface, label "OFF"	NEMA 1	2 NO, 2 NC (2 - 50ZAC2)	2	**50EA334**	1
	B = Momentary pushbutton, surface, less insert A = Momentary pushbutton, surface, less insert	NEMA 1	2 NO, 2 NC (2 - 50ZAC2)	2	**50EA3AA**	1
2 unit flush mount-momentary pushbutton	B = Momentary pushbutton green, flush, label "START" A = Momentary pushbutton red, flush, label "STOP"	NEMA 1B	1NO, 1NC (50ZAC2)	2	**50CA2DE**	1
	B = Momentary pushbutton, less insert, flush A = Momentary pushbutton, less insert, flush	NEMA 1B	1NO, 1NC (50ZAC2)	2	**50CA2AA**	1
	B = Momentary pushbutton green, flush, label "START" A = Momentary raised pushbutton red, flush, label "STOP"	NEMA 1B	1NO, 1NC (50ZAC2)	2	**50CA2DF**	1
	B = Momentary pushbutton green, flush, label "START" A = Momentary mushroom head pushbutton red, flush, label "STOP"	NEMA 1B	1NO, 1NC (50ZAC2)	2	**50CA2DG**	1
	B = Momentary pushbutton, less insert, flush A = Momentary pushbutton, less insert, flush	NEMA 1B	1NO, 1NC (50ZAC2)	2	**50CA6AA**	1

Selection and ordering data

	Operator identification	Degree of protection	Contacts / voltage	Number of command points	Order No.	Packs Unit
2 unit flush mount-momentary pushbutton	B = Momentary pushbutton, flush, label "FORWARD" A = Momentary pushbutton, flush, label "REVERSE"	NEMA 1B	2 NO (50ZAC3)	2	**50DA2KL**	1
	B = Momentary pushbutton, flush, label "OPEN" A = Momentary pushbutton, flush, label "CLOSE"	NEMA 1B	2 NO (50ZAC3)	2	**50DA2HJ**	1
	B = Momentary pushbutton, flush, label "UP" A = Momentary pushbutton, flush, label "DOWN"	NEMA 1B	2 NO (50ZAC3)	2	**50DA2NP**	1
	B = Momentary pushbutton, less insert, flush A = Momentary pushbutton, less insert, flush	NEMA 1B	2 NO (50ZAC3)	2	**50DA2AA**	1
	B = Momentary pushbutton, less insert, chrome plate, flush A = Momentary pushbutton, less insert, chrome plate, flush	NEMA 1B	2 NO (50ZAC3)	2	**50DA6AA**	1
	B = Momentary pushbutton, flush, label "FORWARD" A = Momentary pushbutton, flush, label "REVERSE"	NEMA 1B	2 NO mechanically interlocked (50ZA3C w/ 50ZAM)	2	**50RA2KL**	1
	B = Momentary pushbutton, flush, label "OPEN" A = Momentary pushbutton, flush, label "CLOSE"	NEMA 1B	2 NO mechanically interlocked (50ZA3C w/ 50ZAM)	2	**50RA2HJ**	1
	B = Momentary pushbutton, flush, label "UP" A = Momentary pushbutton, flush, label "DOWN"	NEMA 1B	2 NO mechanically interlocked (50ZA3C w/ 50ZAM)	2	**50RA2NP**	1
	B = Momentary pushbutton, flush, label "ON" A = Momentary pushbutton, flush, label "OFF"	NEMA 1B	2 NO mechanically interlocked (50ZA3C w/ 50ZAM)	2	**50RA234**	1
	B = Momentary pushbutton, less insert, flush A = Momentary pushbutton, less insert, flush	NEMA 1B	2 NO mechanically interlocked (50ZA3C w/ 50ZAM)	2	**50RA2AA**	1
	B = Momentary pushbutton, less insert, chrome plate, flush A = Momentary pushbutton, less insert, chrome plate, flush	NEMA 1B	2 NO mechanically interlocked (50ZA3C w/ 50ZAM)	2	**50RA6AA**	1
	B = Momentary pushbutton, flush, label "FORWARD" A = Momentary pushbutton, flush, label "REVERSE"	NEMA 1B	2 NO, 2 NC (2 - 50ZAC2)	2	**50EA2KL**	1
	B = Momentary pushbutton, flush, label "OPEN" A = Momentary pushbutton, flush, label "CLOSE"	NEMA 1B	2 NO, 2 NC (2 - 50ZAC2)	2	**50EA2HJ**	1
	B = Momentary pushbutton, flush, label "UP" A = Momentary pushbutton, flush, label "DOWN"	NEMA 1B	2 NO, 2 NC (2 - 50ZAC2)	2	**50EA2NP**	1
	B = Momentary pushbutton, flush, label "ON" A = Momentary pushbutton, flush, label "OFF"	NEMA 1B	2 NO, 2 NC (2 - 50ZAC2)	2	**50EA234**	1
	B = Momentary pushbutton, less insert, flush A = Momentary pushbutton, less insert, flush	NEMA 1B	2 NO, 2 NC (2 - 50ZAC2)	2	**50EA2AA**	1
	B = Momentary pushbutton, less insert, chrome plate, flush A = Momentary pushbutton, less insert, chrome plate, flush	NEMA 1B	2 NO, 2 NC (2 - 50ZAC2)	2	**50EA6AA**	1

Selection and ordering data

	Operator identification	Degree of protection	Contacts / voltage	Number of command points	Order No.	Packs Unit
2 unit surface mount-momentary pushbutton and selector switch	B = Momentary pushbutton green, surface, label "START" A = Maintained selector switch, surface, label "HAND-OFF-AUTO"	NEMA 1	1NO, 1NC (50ZAC1) 2 NO 2SPDT w/ common jumper (50ZAC8)	2	**50FA3DC3**	1
	B = Momentary pushbutton less insert, surface A = Maintained selector switch, multiple legends, surface	NEMA 1	1NO, 1NC (50ZAC1) 2 NO 2SPDT w/ common jumper (50ZAC8)	2	**50FA3AB9**	1
	B = Indicator light, red, surface A = Maintained selector switch, surface, label "HAND-OFF-AUTO"	NEMA 1	120/240V dual voltage (120PSB lamp) 2 NO 2SPDT w/ common jumper (50ZAC8)	2	**50HA3YC3**	1
2 unit surface mount-momentary pushbutton and indicator light	B = Indicator light, red, surface A = Maintained selector switch, multiple legends, surface	NEMA 1	120/240V dual voltage (120PSB lamp) 2 NO 2SPDT w/ common jumper (50ZAC8)	2	**50HA32B9**	1
	B = Indicator light, green, surface A = Indicator light, red, surface	NEMA 1	120/240V dual voltage (120PSB lamp)	2	**50GA3ZY**	1
	B = Indicator light, less lens, surface A = Indicator light, less lens, surface	NEMA 1	120/240V dual voltage (120PSB lamp)	2	**50GA322**	1
2 unit flush mount-momentary pushbutton and selector switch	B = Momentary pushbutton green, flush, label "START" A = Maintained selector switch, flush, label "HAND-OFF-AUTO"	NEMA 1B	1NO, 1NC (50ZAC1) 2 NO 2SPDT w/ common jumper (50ZAC8)	2	**50FA2DC3**	1
	B = Momentary pushbutton less insert, flush A = Maintained selector switch, multiple legends, flush	NEMA 1B	1NO, 1NC (50ZAC1) 2 NO 2SPDT w/ common jumper (50ZAC8)	2	**50FA2AB9**	1
	B = Momentary pushbutton less insert chrome plate, flush A = Maintained selector switch, multiple legends, flush	NEMA 1B	1NO, 1NC (50ZAC1) 2 NO 2SPDT w/ common jumper (50ZAC8)	2	**50FA6AB9**	1
	B = Indicator light, red, flush A = Maintained selector switch, flush, label "HAND-OFF-AUTO"	NEMA 1B	120/240V dual voltage (120PSB lamp) 2 NO 2SPDT w/ common jumper (50ZAC8)	2	**50HA2YC3**	1
	B = Indicator light, less lens, flush A = Maintained selector switch, multiple legends, flush	NEMA 1B	120/240V dual voltage (120PSB lamp) 2 NO 2SPDT w/ common jumper (50ZAC8)	2	**50HA22B9**	1
	B = Indicator light, less lens, chrome plate, flush A = Maintained selector switch, multiple legends, flush	NEMA 1B	120/240V dual voltage (120PSB lamp) 2 NO 2SPDT w/ common jumper (50ZAC8)	2	**50HA62B9**	1
2 unit flush mount-momentary pushbutton and indicator light	B = Indicator light, green, flush A = Indicator light, red, flush	NEMA 1B	120/240V dual voltage (120PSB lamp)	2	**50GA2ZY**	1
	B = Indicator light, less lens, flush A = Indicator light, less lens, flush	NEMA 1B	120/240V dual voltage (120PSB lamp)	2	**50GA222**	1
	B = Indicator light, less lens, chrome plate, flush A = Indicator light, less lens, chrome plate, flush	NEMA 1B	120/240V dual voltage (120PSB lamp)	2	**50GA622**	1
3 unit surface mount-momentary pushbutton	C = Momentary pushbutton, surface, label "FORWARD" B = Momentary pushbutton, surface, label "REVERSE" A = Momentary pushbutton, surface, label "STOP"	NEMA 1	2 NO, 2 NC (2 - 50ZAC2) 1NO - 1NC with common jumper (50ZAC1)	3	**50MA3KLE**	1
	C = Momentary pushbutton, surface, label "UP" B = Momentary pushbutton, surface, label "DOWN" A = Momentary pushbutton, surface, label "STOP"	NEMA 1	2 NO, 2 NC (2 - 50ZAC2) 1NO - 1NC with common jumper (50ZAC1)	3	**50MA3NPE**	1
	C = Momentary pushbutton, surface, label "OPEN" B = Momentary pushbutton, surface, label "CLOSE" A = Momentary pushbutton, surface, label "STOP"	NEMA 1	2 NO, 2 NC (2 - 50ZAC2) 1NO - 1NC with common jumper (50ZAC1)	3	**50MA3HJE**	1

Selection and ordering data

	Operator identification	Degree of protection	Contacts / voltage	Number of command points	Order No.	Packs Unit
3 unit surface mount-momentary pushbutton	C = Momentary pushbutton, surface, label "FAST" B = Momentary pushbutton, surface, label "SLOW" A = Momentary pushbutton, surface, label "STOP"	NEMA 1	2 NO, 2 NC (2 - 50ZAC2) 1NO - 1NC with common jumper (50ZAC1)	3	**50MA3TUE**	1
	C = Momentary pushbutton, surface, label "START" B = Momentary pushbutton, surface, label "JOG" A = Momentary pushbutton, surface, label "STOP"	NEMA 1	2 NO, 2 NC (2 - 50ZAC2) 1NO - 1NC with common jumper (50ZAC1)	3	**50MA3DME**	1
	C = Momentary pushbutton, surface, label less insert B = Momentary pushbutton, surface, label less insert A = Momentary pushbutton, surface. label less insert	NEMA 1	2 NO, 2 NC (2 - 50ZAC2) 1NO - 1NC with common jumper (50ZAC1)	3	**50MA3AAA**	1
3 unit surface mount-momentary pushbutton and selector switch	C = Momentary pushbutton, surface, label "START" B = Momentary pushbutton, surface, label "STOP" A = Maintained selector switch, surface, label "HAND-OFF-AUTO"	NEMA 1	1 NO, 1 NC (50ZAC2) 2 NO, 2 SPST with common jumper (50ZAC8)	3	**50LA3DEC3**	1
	C = Momentary pushbutton, less insert, surface B = Momentary pushbutton, less insert, surface A = Maintained selector switch, multiple legends, surface	NEMA 1	1 NO, 1 NC (50ZAC2) 2 NO, 2 SPST with common jumper (50ZAC8)	3	**50LA3AAB9**	1
3 unit surface mount-momentary pushbutton and indicator light	C = Indicator light, red, surface B = Momentary pushbutton, surface, label "START" A = Momentary pushbutton, surface, label "STOP"	NEMA 1	120/240V dual voltage (120PSB lamp) 1 NO, 1 NC (50ZAC2)	3	**50JA3YDE**	1
	C = Indicator light, green, surface B = Momentary pushbutton, surface, label "START" A = Momentary pushbutton, surface, label "STOP"	NEMA 1	120/240V dual voltage (120PSB lamp) 1 NO, 1 NC (50ZAC2)	3	**50JA3ZDE**	1
	C = Indicator light, less lens, surface B = Momentary pushbutton, less insert, surface A = Momentary pushbutton, less insert, surface	NEMA 1	120/240V dual voltage (120PSB lamp) 1 NO, 1 NC (50ZAC2)	3	**50JA32AA**	1
	C = Indicator light, green, surface B = Indicator light, red, surface A = Maintained selector switch, surface, label "HAND-OFF-AUTO"	NEMA 1	120/240V dual voltage (120PSB lamp) 2 NO, 2 SPST with common jumper (50ZAC8)	3	**50NA3ZYC3**	1
	C = Indicator light, less lens, surface B = Indicator light, less lens, surface A = Maintained selector switch, multiple legends, surface	NEMA 1	120/240V dual voltage (120PSB lamp) 2 NO, 2 SPST with common jumper (50ZAC8)	3	**50NA322B9**	1

Selection and ordering data

	Operator identification	Degree of protection	Contacts / voltage	Number of command points	Order No.	Packs Unit
	A = Momentary pushbutton green, surface, label "START""	NEMA 4	1NO - 1NC	1	**50HA1E1**	1
	A = Momentary pushbutton red, surface, label "STOP"	NEMA 4	1NO - 1NC	1	**50HA1E2**	1
	A = Momentary pushbutton green, surface, label "RESET"	NEMA 4	1NO - 1NC	1	**50HA1E4**	1
	A = Momentary pushbutton green, surface, label "JOG"	NEMA 4	1NO - 1NC	1	**50HA1E5**	1
	A = Maintained selector switch, surface, label "SAFE-RUN"	NEMA 4	1NO - 1NC	1	**50HA1E6**	1
	A = Maintained selector switch, surface, label "OFF-ON"	NEMA 4	1NO - 1NC	1	**50HA1E7**	1
	A = Maintained selector switch, surface, label "JOG-RUN"	NEMA 4	1NO - 1NC	1	**50HA1E8**	1
	A = Maintained selector switch, surface, label "HAND-OFF-AUTO"	NEMA 4	1NO - 1NC	1	**50HA1E9**	1
	B = Momentary pushbutton green, surface, label "START" A = Momentary pushbutton red, surface, label "STOP"	NEMA 4	1NO - 1NC 1NO - 1NC	2	**50HA2E1**	1
	B = Momentary pushbutton green, surface, label "FORWARD" A = Momentary pushbutton red, surface, label "REVERSE"	NEMA 4	1NO - 1NC 1NO - 1NC	2	**50HA2E2**	1
	B = Momentary pushbutton green, surface, label "UP" A = Momentary pushbutton red, surface, label "DOWN"	NEMA 4	1NO - 1NC 1NO - 1NC	2	**50HA2E3**	1
	B = Momentary pushbutton green, surface, label "OPEN" A = Momentary pushbutton red, surface, label "CLOSE"	NEMA 4	1NO - 1NC 1NO - 1NC	2	**50HA2E4**	1
	B = Momentary pushbutton green, surface, label "FAST" A = Momentary pushbutton red, surface, label "SLOW"	NEMA 4	1NO - 1NC 1NO - 1NC	2	**50HA2E5**	1
	C = Momentary pushbutton green, surface, label "FORWARD" B = Momentary pushbutton green, surface, label "REVERSE" A = Momentary pushbutton red, surface, label "STOP"	NEMA 4	1NO - 1NC 1NO - 1NC 1NO - 1NC	3	**50HA3E1**	1
	C = Momentary pushbutton green, surface, label "UP" B = Momentary pushbutton green, surface, label "DOWN" A = Momentary pushbutton red, surface, label "STOP"	NEMA 4	1NO - 1NC 1NO - 1NC 1NO - 1NC	3	**50HA3E2**	1
	C = Momentary pushbutton green, surface, label "OPEN" B = Momentary pushbutton green, surface, label "CLOSE" A = Momentary pushbutton red, surface, label "STOP"	NEMA 4	1NO - 1NC 1NO - 1NC 1NO - 1NC	3	**50HA3E3**	1
	C = Momentary pushbutton green, surface, label "START" B = Momentary pushbutton green, surface, label "JOG" A = Momentary pushbutton red, surface, label "STOP"	NEMA 4	1NO - 1NC 1NO - 1NC 1NO - 1NC	3	**50HA3E9**	1
	C = Momentary pushbutton green, surface, label "FAST" B = Momentary pushbutton green, surface, label "SLOW" A = Momentary pushbutton red, surface, label "STOP"	NEMA 4	1NO - 1NC 1NO - 1NC 1NO - 1NC	3	**50HA3E4**	1

Selection and ordering data

Legend inscription insert for snap-on mounting

Inscription	Color	Order No.	Pack Unit
Close	Orange	**50D53493005**	1
Down	Orange	**50D53493010**	1
Fast	Black	**50D53493013**	1
Forward	Green	**50D53493006**	1
High	Black	**50D53493015**	1
Hoist	Green	**50D53493011**	1
Jog	Black	**50D53493008**	1
Low	Black	**50D53493016**	1
Lower	Orange	**50D53493012**	1
Off	Red	**50D53493018**	1
On	Green	**50D53493017**	1
Open	Green	**50D53493004**	1
Reverse	Orange	**50D53493007**	1
Slow	Black	**50D53493014**	1
Start	Green	**50D53493001**	1
Stop	Red	**50D53493002**	1
Stop (raised)	Red	**50D53493003**	1
Up	Green	**50D53493009**	1

50ZAC1

50ZAC2

50ZAC8

50ZAC3

Version	Suitable for	Color	Order No.	Pack Unit
Mushroom head		Red	**50ZMH**	1
Padlock attachment	Used only for raised buttons		**50ZAL**	1
Mechanical interlock kit			**50ZAM**	1
Contact blocks				
1NO, 1NC	Single button		**50ZAC1**	1
2NO, 2SPST	Selector switch		**50ZAC8**	1
1NO, 1NC	Two button		**50ZAC2**	1
1NO, 1NO	Two button		**50ZAC3**	1
Pilot light	120/240V Dual Voltage, no lens		**50ZAC6**	1
Pilot light lens		Red	**50ZPL01**	1
		Green	**50ZPL02**	1
Replacement lamps Slide base, lamp type 120PSB	Class 50 type 1, 1B 120V		**50D21983001**	1

Heavy duty station accessories

Version	Suitable for	Color	Order No.	Pack Unit
Pushbutton caps	NEMA 4 control stations	Red	**BHP15X**	1
	NEMA 4 control stations	Black	**BHP16X**	1

Class 50 Standard Duty Pushbutton Stations

Standard duty - 5A 600V AC NEMA B600

1 Unit Station Surface Mounting—Type 1

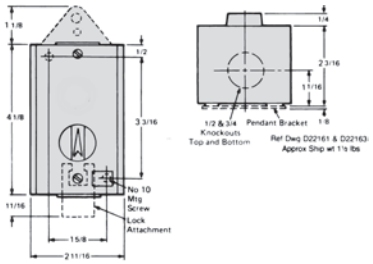

1 Unit Station Flush Mounting—Type 1B

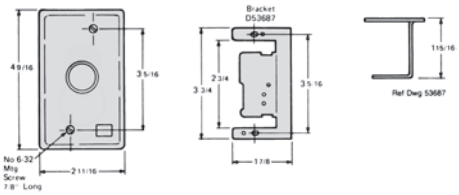

2 Pushbutton Stations Surface Mounting—Type 1

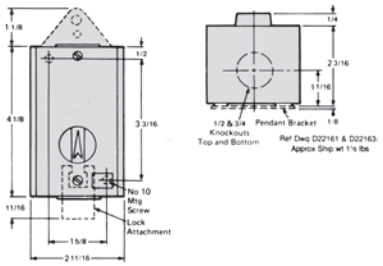

2 Pushbutton Stations Flush Mounting—Type 1B

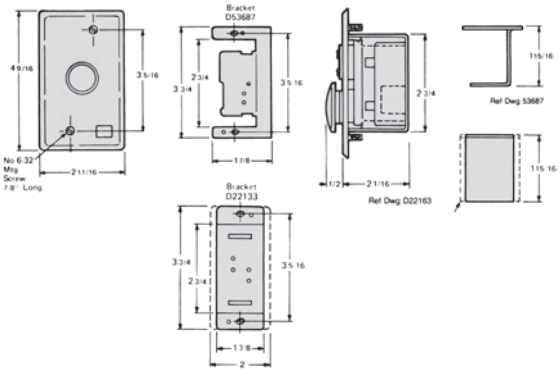

2 Unit Stations Surface Mounting—Type 1

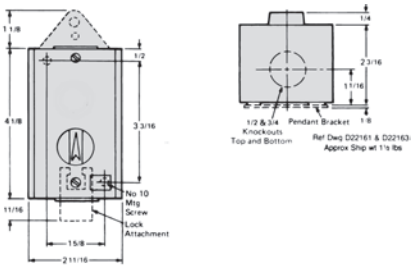

2 Unit Station Flush Mounting—Type 1B

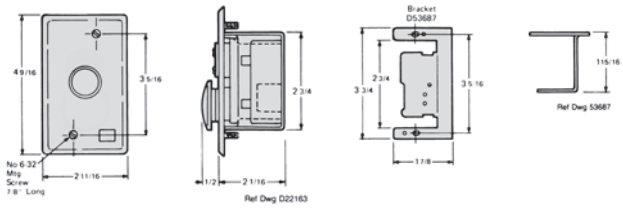

3 Unit Stations Surface Mounting

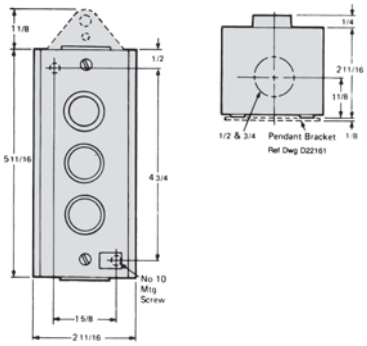

1 Unit Stations—Type 4

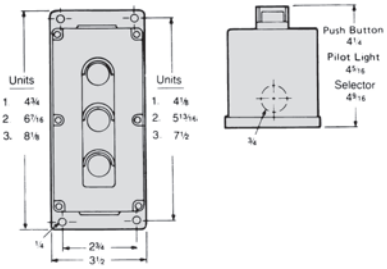

Features

- UL Listed and cUL Listed for Class I, Groups C & D and Class II, Groups E, F & G
- Short or Long Bushing Lengths
- Mount into 3/4-14 NPSM Threaded Hole
- Sealing Lock Nut
- Similar in Appearance to Class 52 Oil Tight Pilot Devices
- Double Break Bifurcated Contacts Rated AC NEMA A600, DC NEMA P600
- ⊖ Positively Driven Contacts
- Touchsafe Terminals
- UL Listed File # E39935
- CSA File No: 023889_0_000

Application

When properly installed in a Type 7 & 9 en-closure, these components meet the National Electrical Code's requirements for Class I, Division 1 & 2, Groups C and D hazardous gases, Class II, Division 1, Groups E, F and G hazardous dust, and Class III, hazardous fibers and flyings. Class 51 pilot de-vices may be used in a location where the presence of flammable gases, vapors or finely pulverized dusts in the atmosphere are sufficient to create a threat of explosion or fire. They may also be required where easily ignitable fibers or flyings are present. Short bushing units are used in most standard Type 7 & 9 enclosures. Long bushings are used when an additional front panel is required or in enclosures up to 2 V8 inches thick. Class 51 devices also meet Type 4 applications.

Rugged

Hazardous location control units are durable one piece castings of a corrosion resistant copper free aluminum alloy with stainless steel springs and type 316 stainless steel shafts to provide a long dependable life. The "0" ring ensures the longest seal life available. Contact blocks have double break bifurcated contacts for increased reliability.

Flexible

Control units mount into industry standard 3/4-14 NPSM threaded holes. Both short bushings for enclosure mounting and long bushings for panel mounting are available.

Pilot light bulbs are removable from the front for ease of maintenance. Many common parts between the Class 51 hazardous location pilot devices and the Class 52 oil tight pilot devices allow for increased serviceability with fewer parts.

Industrial Appearance

Hazardous location control units add luster to panels. They are uniform in appearance and match 52 Class oil tight pilot devices.

Typical Applications

Class I

Class II

Class III

Electrical Ratings

NEMA AC Ratings 50/60Hz

Nema A600 10 Continuous Amps

Volts	Make	Break
120	60	6
240	30	3
480	15	1.5
600	12	1.2
VA	7200	720

Ordering Information

- Accessories see page 17-317-17-318.
- Selector Operating Position and Contact Operation page 17-315.
- Legend Plates see page 17-354.
- Enclosures see page 17-316.
- Technical Specifications: page 17-358.

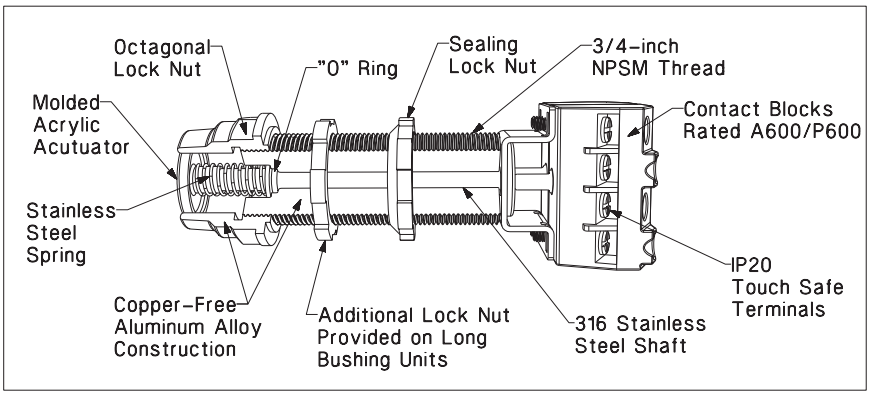

Panel Spacing

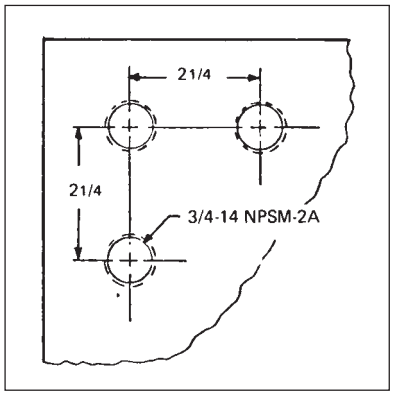

Selection and ordering data

	Version	Color of operator	Contacts	Short bushing Order No.	Long bushing Order No.	Pack Unit
Pushbutton with flat cap	**Pushbutton with flush cap**	Black		**51PA8A1**	**51PA8A1LB**	1
		Red		**51PA8A2**	**51PA8A2LB**	1
		Green		**51PA8A3**	**51PA8A3LB**	1
Pushbutton with extended cap	**Pushbutton with extended cap**	Black		**51PA8B1**	**51PA8B1LB**	1
		Red		**51PA8B2**	**51PA8B2LB**	1
		Green		**51PA8B3**	**51PA8B3LB**	1
Dual pushbutton	**Dual Pushbutton**	Flush Black Raised Red		**51PD8A1B2**	**51PD8A1B2LB**	1
	Pushbutton with mushroom cap 1 5/8"(41.3mm)	Black		**51PA9D1**	**51PA9D1LB**	1
		Red		**51PA9D2**	**51PA9D2LB**	1
		Green		**51PA9D3**	**51PA9D3LB**	1
	Pushbutton with mushroom cap 2 1/2"(63.5mm)	Black		**51PA9E1**	**51PA9E1LB**	1
		Red		**51PA9E2**	**51PA9E2LB**	1
		Green		**51PA9E3**	**51PA9E3LB**	1
		Less head		**51PA9**	**51PA9LB**	1
2 position push-pull	**2 Position Push Pull Maintained, Non Illuminated** Small Plastic Mushroom Head, 1 5/8" (41.3 mm)	Black		**51PA2D1**	**51PA2D1LB**	1
		Red		**51PA2D2**	**51PA2D2LB**	1
		Green		**51PA2D3**	**51PA2D3LB**	1
	Large Plastic Mushroom Head, 2 1/4" (57.2 mm)	Black		**51PA2E1**	**51PA2E1LB**	1
		Red		**51PA2E2**	**51PA2E2LB**	1
		Green		**51PA2E3**	**51PA2E3LB**	1
		Less head		**51PA2**	**51PA2LB**	1
	2 Position Push Pull Maintained, Non Illuminated Small Mushroom Head, 1 5/8"(41.3mm)	Black	1NC + 1NO	**51PA2D1A**	**51PA2D1LBA**	1
		Red	1NC + 1NO	**51PA2D2A**	**51PA2D2LBA**	1
		Green	1NC + 1NO	**51PA2D3A**	**51PA2D3LBA**	1
	Large Mushroom Head, 2 1/2"(63.5mm)	Black	1NC + 1NO	**51PA2E1A**	**51PA2E1LBA**	1
		Red	1NC + 1NO	**51PA2E2A**	**51PA2E2LBA**	1
		Green	1NC + 1NO	**51PA2E3A**	**51PA2E3LBA**	1
3 position push-pull	**3 Position Push Pull Momentary, Non Illuminated** Small Mushroom Head, 1 5/8"(41.3mm)	Black	1NC + 1NO	**51PA3A1U**	**51PA3A1ULB**	1
		Red	1NC + 1NO	**51PA3A2U**	**51PA3A2ULB**	1
		Green	1NC + 1NO	**51PA3A3U**	**51PA3A3ULB**	1

Selection and ordering data

Indicator light-full voltage

Indicator light-transformer type

Version	Color of operator	Contacts	Short bushing Order No.	Long bushing Order No.	Pack Unit
Indicator light with glass lens - Full voltage type AC/DC (with 6" pigtail leads) [1) 3)] Operators with Incandescent Lamp 6-8V with 755 type	Red Green Amber Less lens		**51PC5B2** **51PC5B3** **51PC5B9** **51PC5BN**	**51PC5B2LB** **51PC5B3LB** **51PC5B9LB** **51PC5BNLB**	1
12V with 756 type	Red Green Amber Less lens		**51PC5C2** **51PC5C3** **51PC5C9** **51PC5CN**	**51PC5C2LB** **51PC5C3LB** **51PC5C9LB** **51PC5CNLB**	1
24V with 757 type	Red Green Amber Less lens		**51PC5D2** **51PC5D3** **51PC5D9** **51PC5DN**	**51PC5D2LB** **51PC5D3LB** **51PC5D9LB** **51PC5DNLB**	1
Operators with LED Lamp [2)] 6-8V with BA9 type LED	Red Green Amber		**51PE5B2** **51PE5B3** **51PE5B9**	**51PE5B2LB** **51PE5B3LB** **51PE5B9LB**	1
24V with BA9 type LED	Red Green Amber		**51PE5D2** **51PE5D3** **51PE5D9**	**51PE5D2LB** **51PE5D3LB** **51PE5D9LB**	1
Indicator light with glass lens - Transformer type AC/DC [1) 3)] Operators with Incandescent Lamp 120V with 6V 755 type lamp	Red Green Amber Less lens		**51PC5G2** **51PC5G3** **51PC5G9** **51PC5GN**	**51PC5G2LB** **51PC5G3LB** **51PC5G9LB** **51PC5GNLB**	1
240V with 6V 755 type lamp	Red Green Amber Less lens		**51PC5H2** **51PC5H3** **51PC5H9** **51PC5HN**	**51PC5H2LB** **51PC5H3LB** **51PC5H9LB** **51PC5HNLB**	1
480V with 6V 755 type lamp	Red Green Amber Less lens		**51PC5J2** **51PC5J3** **51PC5J9** **51PC5JN**	**51PC5J2LB** **51PC5J3LB** **51PC5J9LB** **51PC5JNLB**	1
600V with 6V 755 type lamp	Red Green Amber Less lens		**51PC5K2** **51PC5K3** **51PC5K9** **51PC5KN**	**51PC5K2LB** **51PC5K3LB** **51PC5K9LB** **51PC5KNLB**	1
Operators with LED Lamp [2)] 120V with 6V BA9 type LED	Red Green Amber Less lens		**51PE5G2** **51PE5G3** **51PE5G9** **—**	**51PE5G2LB** **51PE5G3LB** **51PE5G9LB** **—**	1
240V with 6V BA9 type LED	Red Green Amber Less lens		**51PE5H2** **51PE5H3** **51PE5H9** **—**	**51PE5H2LB** **51PE5H3LB** **51PE5H9LB** **—**	1
480V with 6V BA9 type LED	Red Green Amber Less lens		**51PE5J2** **51PE5J3** **51PE5J9** **—**	**51PE5J3LB** **51PE5J3LB** **51PE5J9LB** **—**	1
600V with 6V BA9 type LED	Red Green Amber Less lens		**51PE5K2** **51PE5K3** **51PE5K9** **—**	**51PE5K2LB** **51PE5K3LB** **51PE5K9LB** **—**	1
Indicator light with glass lens - Resistor type AC/DC*	Red Green Amber Less lens		**51PC5M2** **51PC5M3** **51PC5M9** **51PC5MN**	**51PC5M2LB** **51PC5M3LB** **51PC5M9LB** **51PC5MNLB**	1
120V with 24V 757 type lamp					
120V with 24V BA9 type LED lamp [2)]	Red Green Amber		**51PE5M2** **51PE5M3** **51PE5M9**	**51PE5M2LB** **51PE5M3LB** **51PE5M9LB**	1

1) For other colors not listed, order operator less lens and separate lens from page 10/127.

2) LED color must match lens color.

3) All illuminated devices come with std. Touch-safe shield per UL stds.

Class 51, Hazardous Location NEMA Type 7 & 9 Devices

Push to test complete units

Selection and ordering data

Push to test full voltage

Push to test transformer type

Version	Color of operator	Contacts	Short bushing Order No.	Long bushing Order No.	Pack Unit
Push to test/Illuminated pushbutton with glass lens - Full voltage type AC/DC [1] [3] Operators with Incandescent Lamp 6V with 755 type lamp	Red	1NO + 1NC	**51PC6B2A**	**51PC6B2ALB**	1
	Green	1NO + 1NC	**51PC6B3A**	**51PC6B3ALB**	1
	Amber	1NO + 1NC	**51PC6B9A**	**51PC6B9ALB**	1
	Less lens	1NO + 1NC	**51PC6BNA**	**51PC6BNALB**	1
24V with 757 type lamp	Red	1NO + 1NC	**51PC6D2A**	**51PC6D2ALB**	1
	Amber	1NO + 1NC	**51PC6D3A**	**51PC6D3ALB**	1
	Green	1NO + 1NC	**51PC6D9A**	**51PC6D9ALB**	1
	Less lens	1NO + 1NC	**51PC6DNA**	**51PC6DNALB**	1
Operators with LED Lamp [2] 6-8V with BA9 type LED	Red	1NO + 1NC	**51PE6B2A**	**51PE6B2ALB**	1
	Green	1NO + 1NC	**51PE6B3A**	**51PE6B3ALB**	1
	Amber	1NO + 1NC	**51PE6B9A**	**51PE6B9ALB**	1
24V with BA9 type LED	Red	1NO + 1NC	**51PE6D2A**	**51PE6D2ALB**	1
	Green	1NO + 1NC	**51PE6D3A**	**51PE6D3ALB**	1
	Amber	1NO + 1NC	**51PE6D9A**	**51PE6D9ALB**	1
Push to test/Illuminated pushbutton with glass lens - Transformer type (50/60 Hz) [1] [3] Operators with Incandescent Lamp 120V with 6V 755 type lamp	Red	1NO + 1NC	**51PC6G2A**	**51PC6G2ALB**	1
	Green	1NO + 1NC	**51PC6G3A**	**51PC6G3ALB**	1
	Amber	1NO + 1NC	**51PC6G9A**	**51PC6G9ALB**	1
	Less lens	1NO + 1NC	**51PC6GNA**	**51PC6GNALB**	1
240V with 6V 755 type lamp	Red	1NO + 1NC	**51PC6H2A**	**51PC6H2ALB**	1
	Green	1NO + 1NC	**51PC6H3A**	**51PC6H3ALB**	1
	Amber	1NO + 1NC	**51PC6H9A**	**51PC6H9ALB**	1
	Less lens	1NO + 1NC	**51PC6HNA**	**51PC6HNALB**	1
480V with 6V 755 type lamp	Red	1NO + 1NC	**51PC6J2A**	**51PC6J2ALB**	1
	Green	1NO + 1NC	**51PC6J3A**	**51PC6J3ALB**	1
	Amber	1NO + 1NC	**51PC6J9A**	**51PC6J9ALB**	1
	Less lens	1NO + 1NC	**51PC6JNA**	**51PC6JNALB**	1
600V with 6V 755 type lamp	Red	1NO + 1NC	**51PC6K2A**	**51PC6K2ALB**	1
	Green	1NO + 1NC	**51PC6K3A**	**51PC6K3ALB**	1
	Amber	1NO + 1NC	**51PC6K9A**	**51PC6K9ALB**	1
	Less lens	1NO + 1NC	**51PC6KNA**	**51PC6KNALB**	1
Operators with LED Lamp [2] 120V with 6V BA9 type LED	Red	1NO + 1NC	**51PE6G2A**	**51PE6G2ALB**	1
	Green	1NO + 1NC	**51PE6G3A**	**51PE6G3ALB**	1
	Amber	1NO + 1NC	**51PE6G9A**	**51PE6G9ALB**	1
240V with 6V BA9 type LED	Red	1NO + 1NC	**51PE6H2A**	**51PE6H2ALB**	1
	Green	1NO + 1NC	**51PE6H3A**	**51PE6H3ALB**	1
	Amber	1NO + 1NC	**51PE6H9A**	**51PE6H9ALB**	1
480V with 6V BA9 type LED	Red	1NO + 1NC	**51PE6J2A**	**51PE6J2ALB**	1
	Green	1NO + 1NC	**51PE6J3A**	**51PE6J3ALB**	1
	Amber	1NO + 1NC	**51PE6J9A**	**51PE6J9ALB**	1
600V with 6V BA9 type LED	Red	1NO + 1NC	**51PE6K2A**	**51PE6K2ALB**	1
	Green	1NO + 1NC	**51PE6K3A**	**51PE6K3ALB**	1
	Amber	1NO + 1NC	**51PE6K9A‘**	**51PE6K9ALB**	1

Overload reset operators with reset legend plate

Version	Color	Legend Inscription	Order No.
Single unit 7/8" diameter reset pad, 10" shaft can be cut to length.	Red	Reset	**51AAS**
Multi unit For use with multi push operation requirements.	Red	Reset	**51AAM**

1) For other colors not listed, order operator less lens and separate lens from page 10/127.

2) LED color must match lens color.

3) All illuminated devices come with std. Touch-safe shield per UL stds.

Selection and ordering data

Version	Lever type	Color of insert	Cam Code 1) 2)	Short bushing Order No.	Long bushing Order No.	Pack Unit
Selector switches with 2 switching positions Maintained operation	Short lever, non-Illuminated	White	A	**51SA2AA**	**51SA2AALB**	1
	Long lever, non-Illuminated	White	A	**51SB2AA**	**51SB2AALB**	
Spring return from right operation	Short lever, non-Illuminated	White	A	**51SA2AC**	**51SA2ACLB**	1
	Long lever, non-Illuminated	White	A	**51SB2AC**	**51SB2ACLB**	
Selector switches with 3 switching positions Maintained operation	Short lever, non-Illuminated	White	B	**51SA2BA**	**51SA2BALB**	1
	Long lever, non-Illuminated	White	B	**51SB2BA**	**51SB2BALB**	
	Short lever, non-Illuminated	White	C	**51SA2CA**	**51SA2CALB**	
	Long lever, non-Illuminated	White	C	**51SB2CA**	**51SB2CALB**	
	Short lever, non-Illuminated	White	D	**51SA2DA**	**51SA2DALB**	
	Long lever, non-Illuminated	White	D	**51SB2DA**	**51SB2DALB**	
	Short lever, non-Illuminated	White	E	**51SA2EA**	**51SA2EALB**	
	Long lever, non-Illuminated	White	E	**51SB2EA**	**51SB2EALB**	
	Short lever, non-Illuminated	White	G	**51SA2GA**	**51SA2GALB**	
	Long lever, non-Illuminated	White	G	**51SB2GA**	**51SB2GALB**	
Spring return from right operation	Short lever, non-Illuminated	White	B	**51SA2BC**	**51SA2BCLB**	1
	Long lever, non-Illuminated	White	B	**51SB2BC**	**51SB2BCLB**	
	Short lever, non-Illuminated	White	C	**51SA2CC**	**51SA2CCLB**	
	Long lever, non-Illuminated	White	C	**51SB2CC**	**51SB2CCLB**	
	Short lever, non-Illuminated	White	D	**51SA2DC**	**51SA2DCLB**	
	Long lever, non-Illuminated	White	D	**51SB2DC**	**51SB2DCLB**	
	Short lever, non-Illuminated	White	E	**51SA2EC**	**51SA2ECLB**	
	Long lever, non-Illuminated	White	E	**51SB2EC**	**51SB2ECLB**	
	Short lever, non-Illuminated	White	G	**51SA2GC**	**51SA2GCLB**	
	Long lever, non-Illuminated	White	G	**51SB2GC**	**51SB2GCLB**	
Spring return from left operation	Short lever, non-Illuminated	White	B	**51SA2BB**	**51SA2BBLB**	1
	Long lever, non-Illuminated	White	B	**51SB2BB**	**51SB2BBLB**	
	Short lever, non-Illuminated	White	C	**51SA2CB**	**51SA2CBLB**	
	Long lever, non-Illuminated	White	C	**51SB2CB**	**51SB2CBLB**	
	Short lever, non-Illuminated	White	D	**51SA2DB**	**51SA2DBLB**	
	Long lever, non-Illuminated	White	D	**51SB2DB**	**51SB2DBLB**	
	Short lever, non-Illuminated	White	E	**51SA2EB**	**51SA2EBLB**	
	Long lever, non-Illuminated	White	E	**51SB2EB**	**51SB2EBLB**	
	Short lever, non-Illuminated	White	G	**51SA2GB**	**51SA2GBLB**	
	Long lever, non-Illuminated	White	G	**51SB2GB**	**51SB2GBLB**	
Spring return from left and right operation	Short lever, non-Illuminated	White	B	**51SA2BD**	**51SA2BDLB**	1
	Long lever, non-Illuminated	White	B	**51SB2BD**	**51SB2BDLB**	
	Short lever, non-Illuminated	White	C	**51SA2CD**	**51SA2CDLB**	
	Long lever, non-Illuminated	White	C	**51SB2CD**	**51SB2CDLB**	
	Short lever, non-Illuminated	White	D	**51SA2DD**	**51SA2DDLB**	
	Long lever, non-Illuminated	White	D	**51SB2DD**	**51SB2DDLB**	
	Short lever, non-Illuminated	White	E	**51SA2ED**	**51SA2EDLB**	
	Long lever, non-Illuminated	White	E	**51SB2ED**	**51SB2EDLB**	
	Short lever, non-Illuminated	White	G	**51SA2GD**	**51SA2GDLB**	
	Long lever, non-Illuminated	White	G	**51SB2GD**	**51SB2GDLB**	

1) C CAM limited to 4 single or double pole blocks on spring return operators.

2) For contact operation, see CAM selection chart on page 17-315.

Selection and ordering data

Version	Key removal position	Lock number	CAM Code 1) 2)	Short bushing Order No.	Long bushing Order No.	Pack Unit
Key-operated selector switches with 2 switching positions	Both	550CH	A	**51SA6AE**	**51SA6AELB**	1
	Left	550CH	A	**51SA6AF**	**51SA6AFLB**	
Maintained operation						
Spring return from right operation	Left	550CH	A	**51SA6AC**	**51SA6ACLB**	1
Key-operated selector switches with 3 switching positions	All	550CH	B	**51SA6BE**	**51SA6BELB**	1
			C	**51SA6CE**	**51SA6CELB**	
Maintained operation			D	**51SA6DE**	**51SA6DELB**	
			E	**51SA6EE**	**51SA6EELB**	
			G	**51SA6GE**	**51SA6GELB**	
	Left	550CH	B	**51SA6BF**	**51SA6BFLB**	1
			C	**51SA6CF**	**51SA6CFLB**	
			D	**51SA6DF**	**51SA6DFLB**	
			E	**51SA6EF**	**51SA6EFLB**	
			G	**51SA6GF**	**51SA6GFLB**	
	Right	550CH	B	**51SA6BG**	**51SA6BGLB**	1
			C	**51SA6CG**	**51SA6CGLB**	
			D	**51SA6DG**	**51SA6DGLB**	
			E	**51SA6EG**	**51SA6EGLB**	
			G	**51SA6GG**	**51SA6GGLB**	
	Center	550CH	B	**51SA6BH**	**51SA6BHLB**	1
			C	**51SA6CH**	**51SA6CHLB**	
			D	**51SA6DH**	**51SA6DHLB**	
			E	**51SA6EH**	**51SA6EHLB**	
			G	**51SA6GH**	**51SA6GHLB**	
	Left and Center	550CH	B	**51SA6BK**	**51SA6BKLB**	1
			C	**51SA6CK**	**51SA6CKLB**	
			D	**51SA6DK**	**51SA6DKLB**	
			E	**51SA6EK**	**51SA6EKLB**	
			G	**51SA6GK**	**51SA6GKLB**	
Spring return from right operation	Center	550CH	B	**51SA6BU**	**51SA6BULB**	1
			C	**51SA6CU**	**51SA6CULB**	
			D	**51SA6DU**	**51SA6DULB**	
			E	**51SA6EU**	**51SA6EULB**	
			G	**51SA6GU**	**51SA6GULB**	
Spring return from left operation	Center	550CH	B	**51SA6BT**	**51SA6BTLB**	1
			C	**51SA6CT**	**51SA6CTLB**	
			D	**51SA6DT**	**51SA6DTLB**	
			E	**51SA6ET**	**51SA6ETLB**	
			G	**51SA6GT**	**51SA6GTLB**	
Spring return from left and right operation	Center	550CH	B	**51SA6BV**	**51SA6BVLB**	1
			C	**51SA6CV**	**51SA6CVLB**	
			D	**51SA6DV**	**51SA6DVLB**	
			E	**51SA6EV**	**51SA6EVLB**	
			G	**51SA6GV**	**51SA6GVLB**	
				▲ 5	▲ 5	

To order 1 to 25 special locks for keyed selector switches simply replace the 6 in the 5th digit of the catalog number with a 5 when entering your order. (Ordering Example: 52SC6AE is changed to 52SC5AE and all locks - up to

To order special locks for keyed selector switches, append corresponding 'X' suffix to part number			
Ordering example:	#549CH	**X639**	1
51SA6AEX298	#548CH	**X640**	1
	#547CH	**X641**	1
	#501CH	**X642**	1
	#506CH	**X643**	1

1) C CAM limited to 4 single or double pole blocks on spring return operators.

2) For contact operation, see CAM selection chart on page 17-315.

Selection and ordering data

Design

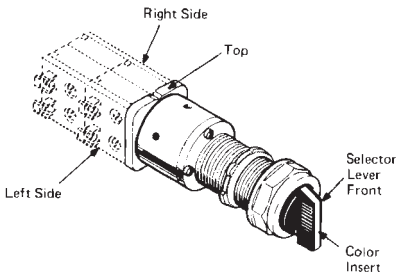

Ordering Information

- Contact blocks are ordered separately, see page 17-318.
- Determine which table to use based upon the type of selector (non-illuminated & keyed on top, illuminated on bottom).
- Find the correct number of selector positions (2, 3 or 4 positions).
- Select the contact operation required for each selector position. X indicates the contacts are closed, while O indicates the contacts are open. (For the selector pushbutton, N=normal and D=depressed). Contact block must be assembled in position shown for each circuit application.
- Identify the CAM letter required for the chosen contact operation (only 1 CAM can be used per selector switch or selector pushbutton).
- Contact blocks must be assembled in the position shown for each circuit application. The mounting position is viewed from the front of the device.

Ordering CAMs D, E or G

- CAM D, E or G may be ordered at the same price by changing the 6th character of the selector catalog number. Example: Selector with D cam **51SA2**D**A.**

Size Requirements

- C CAM on spring return selectors is limited to 4 contact blocks. Standard push buttons accept 4 contact blocks on each side, for a maximum of 8 contact blocks.
- Selector operators in enclosures are limited to depth of 1 contact block. (2 blocks wide).

Non-illuminated and keyed selector switches (viewed from front)

2 Selector Positions		Contact Blocks	CAM	Mounting		
Left	Right			Left		Right
X	O	52BAJ (NC)	A	L	or	R
O	X	52BAK (NO)	A	L	or	R

3 Selector Positions			Contact Blocks	CAM	Mounting		
Left	Center	Right			Left		Right
X	O	O	52BAK (NO)	B			R
O	O	X	52BAK (NO)	B	L		
X	X	O	52BAJ (NC)	B	L		
O	X	X	52BAJ (NC)	B	R		
O	O	X	52BAK (NO)	C	L	or	R
X	O	O	52BAJ (NC)	C	L	or	R
O	O	X	52BAK (NO)	D	L	or	R
O	X	O	52BAJ (NC)	D	L	or	R
X	O	O	52BAK (NO)	E	L	or	R
O	X	O	52BAJ (NC)	E	L	or	R
X	O	O	52BAJ (NC)	G	L		
O	X	O	52BAJ (NC)	G			R
O	O	X	52BAK (NO)	G	L	or	R

Illuminated selector switches

2 Selector Positions		Contact Blocks	CAM	Mounting	
Left	Right			Left	Right
X	O	52BAJ (NC)	A	L	
O	X	52BAK (NO)	A	L	

1) Wired in parallel.

Selection and ordering data

	Operator Identification[1]	Degree of operator	Contacts/ voltage	Number of command points	Order No.	Pack Unit
	A = Momentary flush pushbutton black, label "START"	NEMA 7/9	1NO - 1NC	1	**51C101H**	1
	A = Momentary raised pushbutton red, label "STOP"	NEMA 7/9	1NO - 1NC	1	**51C103H**	1
	A = Momentary 1 5/8" mushroom head red label "STOP"	NEMA 7/9	1NO - 1NC	1	**51C104H**	1
	A = Momentary dual pushbutton red label "START, STOP"	NEMA 7/9	1NO - 1NC	1	**51C105H**	1
	A = 2 position selector switch label "Off-On"	NEMA 7/9	1NO - 1NC	1	**51C159H**	1
	A = 3 position selector switch label "HAND-OFF-AUTO"	NEMA 7/9	1NO - 1NC	1	**51C156H**	1
	A = Indicator light, green, 120 V	NEMA 7/9		1	**51C131H**	1
	A = Indicator light, red, 120 V	NEMA 7/9		1	**51C135H**	1
	B = Momentary flush pushbutton black, label "START" A = Momentary raised pushbutton red, label "STOP"	NEMA 7/9	1NO - 1NC 1NO - 1NC	2	**51C201H**	1
	B = Momentary flush pushbutton black, label " FORWARD" A = Momentary flush pushbutton red, label "REV"	NEMA 7/9	1NO - 1NC 1NO - 1NC	2	**51C204H**	1
	B = Momentary flush pushbutton black, label "START" A = Momentary 1 5/8" mushroom head pushbutton red, label "STOP"	NEMA 7/9	1NO - 1NC 1NO - 1NC	2	**51C202H**	1
	B = Indicator light, red, 120 V A = Indicator light, green, 120 V	NEMA 7/9	1NO - 1NC 1NO - 1NC	2	**51C230H**	1
	C = Momentary flush pushbutton black, label "FORWARD" B = Momentary flush pushbutton black, label "REVERSE" A = Momentary raised pushbutton red, label "STOP"	NEMA 7/9	1NO - 1NC 1NO - 1NC 1NO - 1NC	3	**51C301H**	1
	C = Momentary flush pushbutton black, label "OPEN" B = Momentary flush pushbutton black, label "CLOSE" A = Momentary raised pushbutton red, label "STOP"	NEMA 7/9	1NO - 1NC 1NO - 1NC 1NO - 1NC	3	**51C303H**	1
	C = Indicator light, green, 120 V B = Momentary flush pushbutton black, label "START" A = Momentary raised pushbutton red, label "STOP"	NEMA 7/9	1NO - 1NC 1NO - 1NC	3	**51C307H**	1

Enclosures only[2]

	For field assembly of Type 7 & 9 UL listed and cUL listed control stations. Devices may be installed for either horizontal or vertical mounting using a standard legend. Limited to depth of 1 contact block.	1	**51EA1H**	1
		2	**51EA2H**	1
		3	**51EA3H**	1

1) All enclosures come standard with one conduit entry on top. To get two conduit entries, append X-311 to the end of the order number.

2) For legend plates see page 17-354.

Selection and ordering data

Version	Suitable for	Conduit size (in.)	Color	Order No.	Pack Unit
Mushroom head cap - Plastic	For small 1 5/8" (41.3mm) type, non-illuminated mushroom push-buttons		Black	**52RB3D1**	1
			Red	**52RB3D2**	
			Green	**52RB3D3**	
			Yellow	**52RB3D4**	
			Blue	**52RB3D5**	
			Gray	**52RB3D6**	
			Orange	**52RB3D8**	
			1 kit of each	**52RB3DN**	
Mushroom head cap - Plastic	For large 2 1/2" (63.5mm) type, non-illuminated mushroom push-buttons		Black	**52RB3E1**	1
			Red	**52RB3E2**	
			Green	**52RB3E3**	
			Yellow	**52RB3E4**	
			Blue	**52RB3E5**	
			Gray	**52RB3E6**	
			Orange	**52RB3E8**	
			1 kit of each	**52RB3EN**	
Replacement lens for pilot lights			Red	**51RC4G2**	1
			Green	**51RC4G3**	
Glass lens			Blue	**51RC4G5**	
			Amber	**51RC4G9**	
			Clear	**51RC4GA**	
Replacement lens for push to test/illuminated pushbuttons			Red	**51RC5G2**	1
			Green	**51RC5G3**	
Glass lens			Amber	**51RC5G9**	
Guards			Chrome	**51AAGM**	1
Prevents accidental operation	Non-illuminated Pushbuttons & Push Pull Operators with Mushroom Head Caps 1 5/8" to 1 3/4" in diameter.				
Lever inserts			Red	**52RA2A2**	1
Short lever			Green	**52RA2A3**	
			Blue	**52RA2A4**	
			Amber	**52RA2A5**	
			Gray	**52RA2A6**	
			Orange	**52RA2A8**	
			White	**52RA2AB**	
Long lever			Red	**52RA2B2**	1
			Green	**52RA2B3**	
			Blue	**52RA2B4**	
			Amber	**52RA2B5**	
			Gray	**52RA2B6**	
			Orange	**52RA2B8**	
			White	**52RA2BB**	
Padlock attachment	Only for raised pushbutton operators			**51AAL**	1
Breather/drain (Stainless Steel)	Installs in bottom as a drain or in the top as a breather. Suitable for Class 1 groups C & D and for Class 2 groups F & G applications only. Fits 1/2" NPT.			**51AADB**	1
Lock nut wrench	All devices			**52MAWB**	1
Spare keys	550CH (1 key)			**52KEY-550CH**	1

Selection and ordering data

Version	Suitable for		Conduit size (in.)	Color	Order No.	Pack Unit
Reducer bushings	Cast aluminum, UL recognized and CSA certified. Used to reduce existing tapered NPT conduit opening when required.		3/4 - 1/2		**51AARBA**	1
			1 - 1/2		**51AARCA**	
			1 1/2 - 3/4		**51AARDB**	
			1 1/2 - 1		**51AARDC**	
			2 1/2- 3/4		**51AARFB**	
			2 1/2 - 1		**51AARFC**	
			2 1/2 - 1 1/2		**51AARFD**	
			2 1/2 - 2		**51AARFE**	
			3 - 1		**51AARGC**	
			3 - 1 1/2		**51AARGD**	
			3 - 2		**51AARGE**	
			3 - 2 1/2		**51AARGF**	
Lamps with screw connection, miniature bayonet incandescent lamps						
Flashing, type 267 lamp (replaces 755 lamp)		51, 52	6V		**52AABNF**	1
6V Full voltage, transformer type 755 lamp		51, 52	6V		**52AABN**	1
12V full voltage, type 756		51, 52	12V		**52AACN**	1
24V full voltage, 120/240V resistor push-to-test type 757		51, 52	24V		**52AADN**	1
Neon (uses resistors) type B2A (NE-51H)		51, 52	120V		**52AAPN**	1
120V, full voltage type 3S6/5		51, 52	120V		**52AAENC**	1
LEDs, Single element		51, 52	6V	Red	**52AEB2**	1
		51, 52	6V	Green	**52AEB3**	
		51, 52	6V	Yellow	**52AEB4**	
		51, 52	6V	White	**52AEBB**	
		51, 52	6V	Blue	**52AEB5**	
		51, 52	24V	Red	**52AED2**	
		51, 52	24V	Green	**52AED3**	
		51, 52	24V	Yellow	**52AED4**	
		51, 52	24V	White	**52AEDB**	
		51, 52	24V	Blue	**52AED5**	
		51, 52	120V	Red	**52AEE2**	
		51, 52	120V	Green	**52AEE3**	
		51, 52	120V	Yellow	**52AEE4**	
		51, 52	120V	White	**52AEEB**	
		51, 52	120V	Blue	**52AEE5**	

Selection and ordering data

52BAJ

52BAK

52BAR

Version	Suitable for	Conduit size (in.)	Color	Order No.	Pack Unit
Touchsafe contact blocks with gold flashing					
1 NO				**52BAK**	1
1 NC				**52BAJ** 2)	
1 NO - 1 NC				**52BJK** 2)	
1 NO early make	closes before 52BAK			**52BAH**	
1 NC late break	opens after 52BAJ			**52BAE**	
1 NO - 1 NC	Reed switch UL listed for class 1 division 2 .25A Max, 200V AC, 10 Watt max .5A Max, 200V DC, 10 Watt max			**52BAR** 1)	
1 NC extra late break				**52BAU**	

① Hermetically sealed.
② ➔ Positive opening according to IEC 60947-5-1, Appendix K.

Features

- Octagonal Mounting Nuts
- Meets Type 1, 3, 3R, 4, 4X, 12, 13 and Automotive Standards
- Heavy Duty Rated NEMA A600/P600 Contacts
- ⊖ Positively Driven Contacts
- Positive Indexing Selectors
- Bifurcated Movable Contacts
- Attractive Chrome Plating
- Boots Not Required for Type 4
- UL Listed File # E22655
- CSA Certified File # LR6535
- Touchsafe Terminals

Application

Oil tight pilot controls and accessories are designed to provide long, trouble free service in the most demanding industrial applications. These controls are oil and dust tight and meet Type 3, 4, 4X, 12 and 13 specifications.

Rugged

Industrial control operators are durable one piece castings. Heavy duty plastic buttons resist oils and corrosion. Silver contacts carry heavy duty ratings.

Flexible

Accessories modify standard push buttons, selector switches and pilot lights. Building block construction of contact blocks makes possible many circuitry combinations.

Industrial Appearance

Pilot controls add luster to panels. Chrome plating covers exposed metal parts.

Push Button Operators

The Operator Base consists of a durable, one piece casting equipped with a heavy duty actuator with a stainless steel spring, a neoprene actuator sealing ring to prevent oil and dust from penetrating to the contact blocks, a neoprene gasket to seal operator mounting hole and a chrome plated lock nut.

Mushroom Head Push Button Operators

The Mushroom Head base construction is identical to the push button base. The actuator is molded of high impact material for either a 1 5⁄8 inch or 2 1⁄2 inch diameter molded head. E-STOP Mushroom Head Operators according to EN 60947-5-5 Cat. No. 52BP, 52BR, 52PP, and 52PR, 2 Position, Twist-To-Release & 2 Position, Push Pull Maintained operators provided with red operating heads and 52BJK contact blocks meet the requirements of EN 60947-5-5 for Electrical Emergency Stop Device With Mechanical Latching Function (e-stop).

Contact Blocks

Contact Blocks have double break bifurcated silver contacts, with gold flashing as standard, which improves contact reliability. Contact blocks are heavy duty rated NEMA A600 and suitable for applications down to 5V/1MA solid state outputs. 52BJK offers ⊖ Positive Opening Contacts according to IEC 60947-5-1, Appendix K. Molded bodies and pushers resist arcing and tracking. All units have stainless steel springs that resist corrosion and provide strong contact pressure. Captive mounting screws speed panel assembly.

Push Pull Operators

Push Pull Operators combine two or three functions in one unit. The maintained operator has two positions, typically pull to start, push to stop. The momentary operator with three positions provides spring return from both pull and push positions. In addition, a three position push maintained, pull momentary operator is available. The actuator come is 1 3/4 inch or 2 1/2 inch diameter and is available in an illuminated version.

2 Button Maintained Operator

Maintained Push Buttons consist of two push buttons and a latching assembly. When actuated the button remains depressed and is freed only by the release operator to which it is linked. The button assembly adjusts for mounting from a 1 13⁄16 inch to a 2 5⁄8 inch center.

Transformer Type Pilot Lights

Transformer Type Pilot Lights are available with a 120, 240, 480 or 600 Volt primary (50/60 Hertz) and a separate secondary winding which supplies reduced voltage to a miniature bayonet base 6 Volt lamp. These units are suitable for applications where vibration is present and long bulb life is desirable.

Full Voltage Type Pilot Lights

Full Voltage Pilot Lights are available for 6,12, 24 and 120 Volt AC and DC applications.

Electrical Ratings

NEMA AC Ratings 50/60Hz

NEMA A600 10 Continuous Amps

Volts	Make	Break
120	60	6
240	30	3
480	15	1.5
600	12	1.2
VA	7200	720

Ordering Information

- Accessories: pages 17-343 – 17-346
- Selector Position and Contact Operation: page 17-341 – 17-342.
- Legend Plates: page 17-354.
- Enclosures: page 17-355.
- Technical Specifications: page 17-358.

Resistor Type Pilot Lights

Resistor Type Pilot Lights are available for 240 Volt AC and DC applications. The 240 Volt pilot light is supplied with a 120 Volt lamp and a voltage dropping resistor.

LED Type Pilot Lights

LED's (light emitting diodes) can be used in pilot lights instead of incandescent bulbs because of their long life (up to 10 years), resistance to vibration and ambient sensitivity. Clusted LED options are available for standard pilot lights only. Cluster LED options are not available on Push to test Pilot Lights, Illuminated Pushbuttons, Push-pull, or Twist-to-Release Operators.

Integrated LED Module Type Pilot Lights

The integrated LED module is available for 24, 120, and 240 V. LED modules are vibration resistant and have a long life (up to 10 years). The integrated LED module is available for 24, 120, and 240 V. LED modules are vibration resistant and have a long life (up to 10 yrs.).

Selector Operators

Selector Operators have positive action indexing. Operators are available with either a short or long lever. The molded black lever is designed to accept a color insert. A white insert is provided as standard. Each operator is equipped with a cam to actuate plungers of contact blocks assembled behind the operator. Two, three and four position operators are available with seven different cams.

Lever color inserts are available in 8 colors.

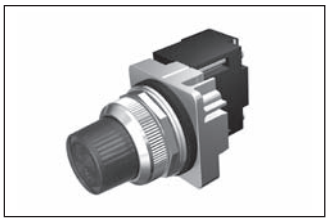

Indicator Light

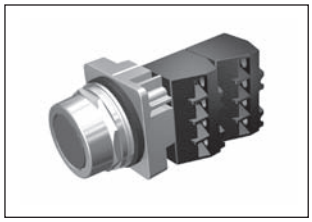

Push Button

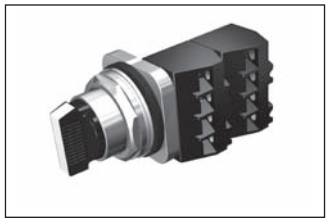

Selector Switch

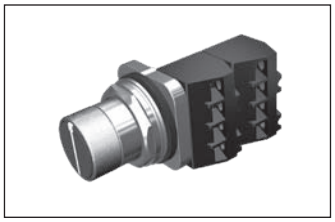

Selector Push Button

Selection Guid

Momentary Push Button - Non-Illuminated

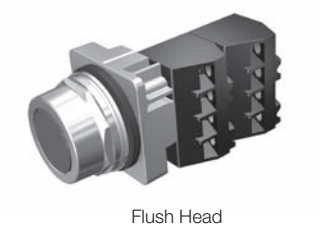

Flush Head

Extended Head

Large Mushroom Head 2 1/2″

Small Mushroom Head 1 3/4″

Part Number	52	a	b	c	d	e[1]
			M			

a	Code	Finish
	P	Chrome - Command 52
	B	Epoxy Coated - Black Max

b	Code	Type
	M	Momentary Push Button

c	Code	Style / Head Type
		Flush / Extended Cap[2]
	8A	Flush
	8B	Extended
		Mushroom Head Metal
	9A	Small Mushroom Head 1 3/4" (44.5mm)
		Mushroom Head Plastic
	9W	Small Mushroom Head 1 3/4" (44.5mm)
	9V	Large Mushroom Head 2 1/2" (63.5mm)

d	Code	Plastic	Metal
	1	Black	—
	2	Red	Red
	3	Green	Green
	4	Yellow	—
	5	Blue	—
	6	Gray	—
	7	All Color Caps	—
	8	Orange	—
	C	—	Chrome

e[1]	Code	Contact Blocks
	A	1 NO + 1 NC
	B	2 NO + 2 NC
	C	3 NO + 3 NC
	D	4 NO + 4 NC
	E	1 NC (LB)
	F	2 NO
	G	2 NC
	H	1NO (EM)
	J	1 NC
	K	1 NO

1 For operator without contact blocks leave position e blank.
2 Products available fall 2014. For current product offer please refer to the 2010 Industrial Control Catalog.

Selection Tables

Momentary Push Button - Non-Illumniated

Head Style	Contacts	Color	Finish: Chrome	Finish: Black Max
Flush	—	Less cap	**52PM8**	**52BM8**
		Black	**52PM8A1**	**52BM8A1**
		Red	**52PM8A2**	**52BM8A2**
		Green	**52PM8A3**	**52BM8A3**
		Yellow	**52PM8A4**	**52BM8A4**
	1 NO - 1 NC	Black	**52PM8A1A**	**52BM8A1A**
		Red	**52PM8A2A**	**52BM8A2A**
		Green	**52PM8A3A**	**52BM8A3A**
	1 NO	Black	**52PM8A1K**	**52BM8A1K**
		Red	**52PM8A2K**	**52BM8A2K**
		Green	**52PM8A3K**	**52BM8A3K**
	1 NC	Red	**52PM8A2J**	**52BM8A2J**
Extended	—	Black	**52PM8B1**	**52BM8B1**
		Red	**52PM8B2**	**52BM8B2**
		Green	**52PM8B3**	**52BM8B3**
	1 NO	Black	**52PM8B1K**	**52BM8B1K**
		Red	**52PM8B2K**	**52BM8B2K**
	1 NC	Red	**52PM8B2J**	**52BM8B2J**
Mushroom Head Plastic Ø 1 3/4”	—	Less cap	**52PM9**	**52BM9**
		Red	**52PM9W2**	**52BM9W2**
	1 NO	Green	**52PM9W3K**	**52BM9W3K**
	1 NO - 1 NC	Black	**52PM9W1A**	**52BM9W1A**
		Red	**52PM9W2A**	**52BM9W2A**
	1 NO - 1 NC	Green	**52PM9W3A**	**52BM9W3A**
Mushroom Head Plastic Ø 2 1/2”	—	Red	**52PM9V2**	**52BM9V2**
	1 NO - 1 NC	Black	**52PM9V1A**	**52BM9V1A**
		Red	**52PM9V2A**	**52BM9V2A**
		Green	**52PM9V3A**	**52BM9V3A**

Readily available items are in **bold**.
This is a small representation of stocked items.

Selection Guide

2 & 3 Position Push-Pull Mushroom Head Devices - Non-Illuminated

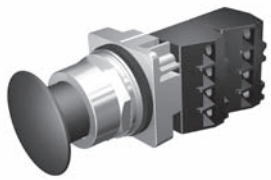

Mushroom Head Metal Ø 1 3/4″

Mushroom Head Plastic Ø 2 1/2″

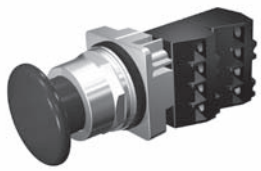

Mushroom Head Plastic Ø 1 3/4″

Part Number	52	____	P	____	____	____	____
		a	b	c	d	e	f[3]

a	Code	Finish
	P	Chrome-Command 52
	B	Epoxy Coated-Black Max

b	Code	Type
	P	Push Pull

c	Code	Function
	2	2 positions - maintained[1]
	3	3 positions - momentary in - momentary out
	7	3 positions - maintained in - momentary out

d	Code	Style
	A	Small metal 1-3/4" (44.5 mm)
	W	Small plastic 1-3/4" (44.5 mm)
	V	Large plastic 2-1/2" (63.5 mm)

e	Code	Color	
		Plastic	**Metal**
	1	Black	—
	2	Red[1]	Red[1]
	3	Green	Green
	4	Yellow	—
	5	Blue	—
	6	Gray	—
	8	Orange	—
	C	—	Chrome
		No Operating Head	
	Z	No head	

f[3]	Code	Contact Blocks
		2 Position
	A	1 NO + 1 NC[1]
	B	2 NO + 2 NC[1]
	C	3 NO + 3 NC[1]
	D	4 NO + 4 NC[1]
	E	1 NC (LB)
	F	2 NO
	G	2 NC[1]
	H	1 NO (EM)
	J	1 NC[1]
	K	1 NO
	Q	1 NO - 1 NC (ELB)
		3 Position
	U	1 NO - 1 NC extra late break[2]

1 EMERGENCY-STOP control devices according to IEC 60947-5-5 when provided with red operating head and positively driven NC contact blocks. Positive opening contacts according to IEC 60947-5-1, Appendix K.

2 Blocks cannot be interchanged (stop-start circuit - pull to start, push to stop).

3 For operator without contact blocks leave position f blank.

Selection Tables

2 & 3 Position Push-Pull Mushroom Head Devices - Non-Illuminated

		2 pos - maintained					
		Metal Ø 1 3/4"		Plastic Ø 1 3/4"		Plastic Ø 2 1/2"	
Contacts	**Color**	**Chrome**	**Black Max**	**Chrome**	**Black Max**	**Chrome**	**Black Max**
—	Black	—	—	**52PP2W1**	52BP2W1	52PP2V1	2BP2V1
	Red	**52PP2A2**	52BP2A2	**52PP2W2**	**52BP2W2**	**52PP2V2**	52BP2V2
	Green	52PP2A3	52BP2A3	**52PP2W3**	52BP2W3	52PP2V3	52BP2V3
	Yellow	—	—	52PP2W4	52BP2W4	52PP2V4	52BP2V4
1 NO - 1 NC	Red	**52PP2A2A**[1]	**52BP2A2A**[1]	**52PP2W2A**[1]	**52BP2W2A**[1]	**52PP2V2A**[1]	52BP2V2A[1]
	Green	**52PP2A3A**	52BP2A3A	**52PP2W3A**	52BP2W3A	**52PP2V3A**	—
	Yellow	—	—	**52PP2W4A**	52BP2W4A	52BP2V4A	52BP2V4A
	Chrome	**52PP2ACA**	52BP2ACA	—	—	—	—

		3 pos - momentary in - momentary out					
		Metal Ø 1 3/4"		Plastic Ø 1 3/4"		Plastic Ø 2 1/2"	
Contacts	**Color**	**Chrome**	**Black Max**	**Chrome**	**Black Max**	**Chrome**	**Black Max**
—	Black	—	—	52PP3W1	52BP3W1	52PP3V1	52BP3V1
	Red	52PP3A2	52BP3A2	**52PP3W2**	52BP3W2	52PP3V2	52BP3V2
	Green	52PP3A3	52BP3A3	52PP3W3	52BP3W3	52PP3V3	2BP3V3
	Chrome	52PP3AC	52BP3AC	—	—	—	—
1 NO - 1 NCELB	Red	52PP3A2U	52BP3A2U	52PP3W2U	52BP3W2U	52PP3V2U	52BP3V2U
	Green	52PP3A3U	52BP3A3U	52PP3W3U	52BP3W3U	52PP3V3U	52BP3V3U

		3 pos - maintained in - momentary out					
		Metal Ø 1 3/4"		Plastic Ø 1 3/4"		Plastic Ø 2 1/2"	
Contacts	**Color**	**Chrome**	**Black Max**	**Chrome**	**Black Max**	**Chrome**	**Black Max**
—	Black	—	—	52PP7W1	52BP7W1	52PP7V1	52BP7V1
	Red	**52PP7A2**	52BP7A2	52PP7W2	52BP7W2	52PP7V2	52BP7V2
	Green	52PP7A3	52BP7A3	52PP7W3	52BP7W3	52PP7V3	52BP7V3
	Chrome	52PP7AC	52BP7AC	—	—	—	—
1 NO - 1 NCELB	Red	52PP7A2U1	52BP7A2U	52PP7W2U	52BP7W2U	52PP7V2U	52BP7V2U
	Green	52PP7A3U	52BP7A3U	52PP7W3U	52BP7W3U	52PP7V3U	52BP7V3U

Readily available items are in **bold**.
This is a small representation of stocked items.

[1] EMERGENCY-STOP control devices according to IEC 60947-5-5

Selection Guide

2 & 3 Position Push-Pull Mushroom Head Devices - Illuminated

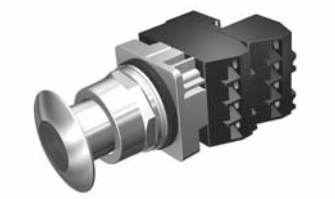

Mushroom Head Metal Ø 1 3/4"

Mushroom Head Plastic Ø 2 1/2"

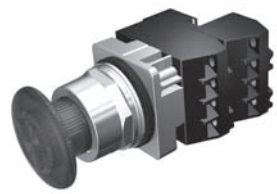

Mushroom Head Plastic Ø 1 3/4"

Part Number	52	____	P	____	____	____	____	____
		a	b	c	d	e	f	g

a

Code	Finish
P	Chrome-Command 52
B	Epoxy Coated-Black Max

b

Code	Type
P	Push Pull Operator

c

Code	Function
2	2 positions - maintained[1]
3	3 positions - momentary in - momentary out[2]
7	3 positions - maintained in - momentary out[2]

d

Code	Operation	
	Full Voltage[3] (AC/DC)	
	Incandescent	LED[4]
B	6-8V	6V
C	12-13V	—
D	24-28V	24-28V
E	120V	120V
F	—	240V
	Transformer[3]	
G	120V AC	
H	240V AC	
J	480V AC	
K	600V AC	

e

Code	Style / Color
	Mushroom Head Metal Ø 1 3/4" (44.5mm)
2	Red[1]
3	Green
5	Blue
9	Amber
A	Clear
B	White
	Mushroom Head Plastic Ø 1 3/4" (44.5 mm)
R	Red[1]
S	Green
T	Amber
	Mushroom Head Plastic Ø 2 1/2" (63.5mm)
D	Red[1]
E	Green
F	Amber
	No Head (full voltage & transformer only)
Z	No head

f

Code	Contact Blocks
	2 Position
A	1 NO + 1 NC[1]
B	2 NO - 2 NC[1]
F	2 NO
G	2 NC[1]
J	1 NC[1]
K	1 NO
Q	1 NO - 1 NC (ELB)
	3 Position
U	1 NO - 1 NC extra late break[2]

g

Code	Bulb Type
Blank	Incandescent
B	LED
Y	Super-Bright LED[5]

1 EMERGENCY-STOP control devices according to IEC 60947-5-5 when provided with red operating head and positively driven NC contact blocks.

Positive opening contacts according to IEC 60947-5-1, Appendix K,

2 Blocks cannot be interchanged (stop-start circuit - pull to start, push to stop).

3 Default bulb type is incandescent. For LED options, append field g. LED option not available on units sold "no head".

4 LED voltages apply to table g option code B and Y. 6V and 120V are currently AC only. Replaced by AC/DC rated versions end of 2014.

5 Not available in 240V.

Selection Tables

					Operator Type			
					2 pos - maintained			
					Metal Ø 1 3/4"		Plastic Ø 1 3/4"	
Type	**Lamp Type**	**Voltage**	**Color**	**Contacts**	**Chrome**	**Black Max**	**Chrome**	**Black Max**
Full Voltage (AC/DC)	LED	24V	Red	1 NO - 1 NC	**52PP2D2AB[1]**	**52BP2D2AB[1]**	**52PP2DRAB[1]**	52BP2DRAB[1]
			Green	1 NO - 1 NC	**52PP2D3AB**	52BP2D3AB	52PP2DSAB	52BP2DSAB
	Incandescent	24V	Red	1 NO - 1 NC	**52PP2D2A[1]**	52BP2D2A[1]	**52PP2DRA[1]**	52BP2DRA[1]
			Green	1 NO - 1 NC	**52PP2D3A**	52BP2D3A	**52PP2DSA**	52BP2DSA
		120V	Red	1 NO - 1 NC	52PP2E2A[1]	52BP2E2A[1]	52PP2ERA[1]	52BP2ERA[1]
				—	52PP2E2	52BP2E2	52PP2ER	52BP2ER
Transformer (AC)	LED	120V	Red	1 NO - 1 NC	**52PP2G2AB[1]**	52BP2G2AB[1]	52PP2GRAB[1]	52BP2GRAB[1]
			Green	1 NO - 1 NC	**52PP2G3AB**	52BP2G3AB	52PP2GSAB	52BP2GSAB
	Incandescent	120V	Red	1 NO - 1 NC	**52PP2G2A[1]**	52BP2G2A[1]	**52PP2GRA[1]**	52BP2GRA[1]
			Green	1 NO - 1 NC	**52PP2G3A**	**52BP2G3A**	**52PP2GSA**	52BP2GSA

					Operator Type			
					3 pos - momentary in - momentary out			
					Metal Ø 1 3/4"		Plastic Ø 1 3/4"	
Type	**Lamp Type**	**Voltage**	**Color**	**Contacts**	**Chrome**	**Black Max**	**Chrome**	**Black Max**
Full Voltage (AC/DC)	LED	24V	Green	1 NO - 1 NCELB	52PP3D3UB	52BP3D3UB	52PP3DRUB	52BP3DRUB
	Incandescent	24V	Green	1 NO - 1 NCELB	52PP3D3U	52BP3D3U	52PP3DSU	52BP3DSU
			Red	1 NO - 1 NCELB	52PP3D2U	52BP3D2U	52PP3DRU	52BP3DRU
		120V	Red	—	52PP3E2	52BP3E2	52PP3ER	52BP3ER
Transformer (AC)	LED	120V	Red	1 NO - 1 NCELB	52PP3G2UB	52BP3G2UB	52PP3GRUB	52BP3GRUB
			Green	1 NO - 1 NCELB	**52PP3G3UB**	52BP3G3UB	52PP3GSUB	52BP3GSUB
	Incandescent	120V	Red	1 NO - 1 NCELB	52PP3G2U	52BP3G2U	52PP3GRU	52BP3GRU
			Green	1 NO - 1 NCELB	52PP3G3U	52BP3G3U	52PP3GRU	52BP3GRU

					Operator Type			
					3 pos - maintained in - momentary out			
					Metal Ø 1 3/4"		Plastic Ø 1 3/4"	
Type	**Lamp Type**	**Voltage**	**Color**	**Contacts**	**Chrome**	**Black Max**	**Chrome**	**Black Max**
Full Voltage (AC/DC)	LED	24V	Green	1 NO - 1 NCELB	52PP7D3UB	52BP7D3UB	52PP7DSUB	52BP7DSUB
	Incandescent	24V	Green	1 NO - 1 NCELB	52PP7D3U	52BP7D3U	52PP7DSU	52BP7DSU
			Red	1 NO - 1 NCELB	52PP7D2U	52BP7D2U	52PP7DRU	52BP7DRU
		120V	Red	—	52PP7E2	52BP7E2	52PP7ER	52BP7ER
Transformer (AC)	LED	120V	Red	1 NO - 1 NCELB	52PP7G2UB	52BP7G2UB	52PP7GRUB	52BP7GRUB
			Green	1 NO - 1 NCELB	52PP7G3UB	52BP7G3UB	52PP7GSUB	52BP7GSUB
	Incandescent	120V	Red	1 NO - 1 NCELB	52PP7G2U	52BP7G2U	52PP7GRU	52BP7GRU
			Green	1 NO - 1 NCELB	52PP7G3U	52BP7G3U	52PP7GRU	52BP7GRU

Readily available items are in **bold**.
This is a small representation of stocked items.

[1] EMERGENCY-STOP control devices according to IEC 60947-5-5

Selection Guide

2 Position Twist-to-Release Devices Mushroom Head - Non-Illuminated

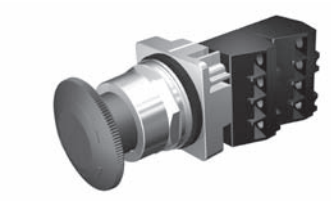

Plastic 1 3/4" Mushroom Head - Chrome

Plastic 1 3/4" Mushroom Head - Black Max

Part Number	52	____	R	8	W	____	____
		a	b	c	d	e	f[2]

Finish	Function	Style	Color	Contacts	Part Number
Chrome	2 Position Twist-to-Release	Plastic 1 3/4" Mushroom Head	Red	1 NO - 1 NC	**52PR8W2A**
Black Max	2 Position Twist-to-Release	Plastic 1 3/4" Mushroom Head	Red	1 NO - 1 NC	**52BR8W2A**
Chrome	2 Position Twist-to-Release	Plastic 1 3/4" Mushroom Head	Red	None	52PR8W2

Readily available items are in **bold**.
This is a small representation of stocked items.

a

Code	Finish
P	Chrome-Command 52
B	Epoxy Coated-Black Max

b

Code	Function
R	2 Position Twist-to-Release, Maintained[1]

c

Code	Style
8	Plastic 1 3/4" Mushroom Head

d

Code	Lamp Type
W	Non-Illuminated

e

Code	Color
2	Red[1]
3	Green
4	Yellow
Z	No head

f[2]

Code	Contact Blocks
A	1 NO + 1 NC[1]
B	2 NO + 2 NC[1]
C	3 NO + 3 NC[1]
D	4 NO + 4 NC[1]
E	1 NC (LB)
F	2 NO
G	2NC[1]
H	1NO (EM)
J	1 NC[1]
K	1 NO

1 EMERGENCY-STOP control devices according to IEC 60947-5-5 when provided with red operating head and positively driven NC contact blocks. Positive opening contacts according to IEC 60947-5-1, Appendix K.

2 For operator without contact blocks leave position f blank.

Selection Guide

2 Position Twist-to-Release Mushroom Head Devices - Illuminated

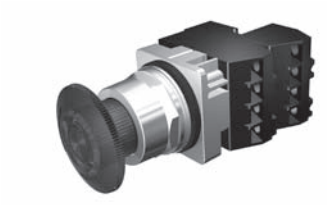

Plastic 1 3/4" Mushroom Head - Chrome

Plastic 1 3/4" Mushroom Head - Black Max

Part Number	52	_____	R	8	_____	_____	_____	_____
		a	b	c	d	e	f	g

Finish	Style	Voltage	Bulb Type	Color	Contacts	Part Number
Chrome	Plastic 1 3/4" Mushroom Head	24V	LED	Red	1 NO - 1 NC	52PR8DRAB
Chrome	Plastic 1 3/4" Mushroom Head	120V	Incandescent	Red	1 NO - 1 NC	52PR8ERA
Chrome	Plastic 1 3/4" Mushroom Head	120V	LED	Red	1 NO - 1 NC	52PR8GRAB

Readily available items are in **bold**.
This is a small representation of stocked items.

a

Code	Finish
P	Chrome-Command 52
B	Epoxy Coated-Black Max

b

Code	Function
R	2 Position Twist-to-Release, Maintained

c

Code	Style
8	Plastic 1 3/4" Mushroom Head

d

Code	Operation	
	Full Voltage[2] (AC/DC)	
	Incandescent	LED[3]
B	6-8V	6V
C	12-13V	—
D	24-28V	24-28V
E	120V	120V
F	—	240V
	Transformer[2]	
G	120V AC	
H	240V AC	
J	480V AC	
K	600V AC	

e

Code	Color
R	Red[1]
S	Green
T	Amber
Z	No head

f

Code	Contact Blocks
A	1 NO + 1 NC[1]
B	2 NO + 2 NC[1]
C	3 NO + 3 NC[1]
D	4 NO + 4 NC[1]
E	1 NC (LB)
F	2 NO
G	2NC[1]
H	1NO (EM)
J	1 NC[1]
K	1 NO

g

Code	Bulb Type
Blank	Incandescent
B	LED
Y	Super-Bright LED[4]

1 EMERGENCY-STOP control devices according to IEC 60947-5-5 when provided with red operating head and positively driven NC contact blocks. Positive opening contacts according to IEC 60947-5-1, Appendix K, Molded bodies.

2 Default bulb type is incandescent. For LED options, append field g. LED option not available on units sold "no head."

3 LED voltages apply to table g option code B and Y. 6V and 120V are currently AC only. Replaced by AC/DC rated versions end of 2014.

4 Not available in 240V.

Selection Guide

Indicator Light

Plastic Lens

Glass Lens

Part Number	52	____ a	L b	____ c	____ d	____ e	____ f

a

Code	Finish
P	Chrome-Command 52
B	Epoxy Coated-Black Max

b

Code	Type
L	Indicator Light

c

Code	Style
4	Plastic Lens
5	Glass Lens

d

Code	Operation	
	Full Voltage[1] (AC/DC)	
	Incandescent	LED[2]
B	6-8V	6V
C	12-13V	—
D	24-28V	24-28V
E	120V	120V
F	—	240V
	Transformer[1]	
G	120V AC	
H	240V AC	
J	480V AC	
K	600V AC	

e

Code	Color
2	Red
3	Green
5	Blue
7	All Colors
9	Amber
A	Clear
B	White
N	No Lens

f

Code	Bulb Type
Blank	Incandescent
XB	LED
XY	Super-Bright LED[3]

1 Default bulb type is incandescent. For LED options, append field f. LED option not available on units sold "No Lens".

2 LED voltages apply to table f option code XB and XY. 6V, 24V (Super Bright only) and 120V are currently AC only. Replaced by AC/DC rated versions end of 2014.

3 Not available in 240V.

Selection Tables

Indicator Light

Type	Lamp Type	Voltage	Color	Plastic Lens: Chrome	Plastic Lens: Black Max
Full Voltage (AC/DC)	LED	24V	Red	**52PL4D2XB**	**52BL4D2XB**
			Green	**52PL4D3XB**	**52BL4D3XB**
			Blue	**52PL4D5XB**	**52BL4D5XB**
			Amber	**52PL4D9XB**	**52BL4D9XB**
			White	**52PL4DBXB**	**52BL4DBXB**
		120V	Red	**52PL4E2XB**	**52BL4E2XB**
			Green	**52PL4E3XB**	**52BL4E3XB**
			Amber	**52PL4E9XB**	**52BL4E9XB**
			Clear	**52PL4EAXB**	**52BL4EAXB**
			White	**52PL4EBXB**	**52BL4EBXB**
	Incandescent	24V	Red	**52PL4D2**	**52BL4D2**
			Green	**52PL4D3**	**52BL4D3**
			Blue	**52PL4D5**	**52BL4D5**
			Amber	**52PL4D9**	**52BL4D9**
			White	**52PL4DB**	**52BL4DB**
			No Lens	**52PL4DN**	**52BL4DN**
		120V	Red	**52PL4E2**	**52BL4E2**
			Green	**52PL4E3**	**52BL4E3**
			Amber	**52PL4E9**	**52BL4E9**
			No Lens	**52PL4EN**	**52BL4EN**
Transformer (AC)	LED	120V	Red	**52PL4G2XB**	**52BL4G2XB**
			Green	**52PL4G3XB**	**52BL4G3XB**
			Amber	**52PL4G9XB**	**52BL4G9XB**
			White	**52PL4GBXB**	**52BL4GBXB**
		480V	Red	**52PL4J2XB**	**52BL4J2XB**
			Green	**52PL4J3XB**	**52BL4J3XB**
			White	**52PL4JBXB**	**52BL4JBXB**
	Incandescent	120V	Red	**52PL4G2**	**52BL4G2**
			Green	**52PL4G3**	**52BL4G3**
			Amber	**52PL4G9**	**52BL4G9**
			White	**52PL4GB**	**52BL4GB**
			No Lens	**52PL4GN**	**52BL4GN**
		240V	Red	**52PL4H2**	**52BL4H2**
			Green	**52PL4H3**	**52BL4H3**
		480V	Red	**52PL4J2**	**52BL4J2**
			Green	**52PL4J3**	**52BL4J3**
			Amber	**52PL4J9**	**52BL4J9**

Readily available items are in **bold**.
This is a small representation of stocked items.

Selection Guide

Push Button & Push-to-Test - Illuminated

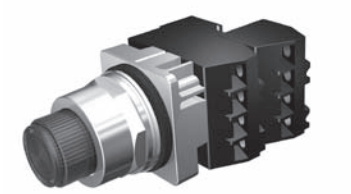

Extended Lens

Flush Lens

Part Number	52	____ a	T b	____ c	____ d	____ e	____ f	____ g

a

Code	Finish
P	Chrome-Command 52
B	Epoxy Coated-Black Max

b

Code	Function
T	Illuminated Push Button / Push-to-Test[1]

c

Code	Style
6	Extended Lens
8	Flush Lens[2]

d

Code	Operation	
	Full Voltage[3] (AC/DC)	
	Incandescent	LED[4]
B	6-8V	6V
C	12-13V	—
D	24-28V	24-28V
E	120V	120V
F	—	240V
	Transformer[3]	
G	120V AC	
H	240V AC	
J	480V AC	
K	600V AC	

1 For push-to-test functionality, wire according to wiring diagram below.

2 Products available fall 2014.

e

Code	Color
2	Red
3	Green
5	Blue
7	All Colors
9	Amber
A	Clear
B	White
N	No Lens

f

Code	Contact Blocks
A	1 NO - 1 NC
B	2 NO + 2 NC
C	3 NO + 3 NC
D	4 NO + 4 NC
E	1 NC (LB)
F	2 NO
G	2 NC
H	1NO (EM)
J	1 NC
K	1 NO

g

Code	Bulb Type
Blank	Incandescent
B	LED
Y	Super-Bright LED[5]

3 Default bulb type is incandescent. For LED options, append field g. LED option not available on units sold "No Lens".

4 LED voltages apply to table g option code B and Y. 6V and 120V are currently AC only. Replaced by AC/DC rated versions end of 2014.

5 Not available in 240V.

Wiring Diagrams

Illuminated Push Button

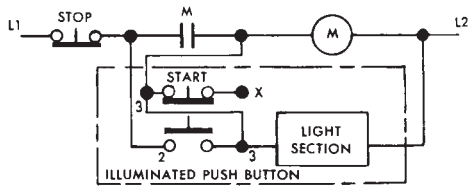

Push to Test

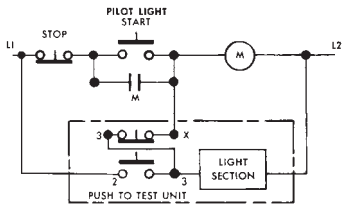

Selection Tables

Push Button & Push-to-Test - Illuminated

Type	Lamp Type	Voltage	Color	Contacts	Extended Lens Chrome	Extended Lens Black Max
Full Voltage (AC/DC)	LED	24V	Red	1 NO - 1 NC	**52PT6D2AB**	**52BT6D2AB**
			Green	1 NO - 1 NC	**52PT6D3AB**	**52BT6D3AB**
			Blue	1 NO - 1 NC	**52PT6D5AB**	**52BT6D5AB**
			Amber	1 NO - 1 NC	**52PT6D9AB**	**52BT6D9AB**
			White	1 NO - 1 NC	**52PT6DBAB**	**52BT6DBAB**
		120V	Red	1 NO - 1 NC	**52PT6E2AB**	**52BT6E2AB**
			Green	1 NO - 1 NC	**52PT6E3AB**	**52BT6E3AB**
	Incandescent	24V	Red	1 NO - 1 NC	**52PT6D2A**	**52BT6D2A**
			Green	1 NO - 1 NC	**52PT6D3A**	**52BT6D3A**
			Blue	1 NO - 1 NC	**52PT6D5A**	**52BT6D5A**
			Amber	1 NO - 1 NC	**52PT6D9A**	**52BT6D9A**
			White	1 NO - 1 NC	**52PT6DBA**	**52BT6DBA**
		120V	Red	1 NO - 1 NC	**52PT6E2A**	**52BT6E2A**
			Green	1 NO - 1 NC	**52PT6E3A**	**52BT6E3A**
Transformer (AC)	LED	120V	Red	1 NO - 1 NC	**52PT6G2AB**	**52BT6G2AB**
			Green	1 NO - 1 NC	**52PT6G3AB**	**52BT6G3AB**
			Amber	1 NO - 1 NC	**52PT6G9AB**	**52BT6G9AB**
			White	1 NO - 1 NC	**52PT6GBAB**	**52BT6GBAB**
		240V	Red	1 NO - 1 NC	**52PT6H2AB**	**52BT6H2AB**
			Green	1 NO - 1 NC	**52PT6H3AB**	**52BT6H3AB**
	Incandescent	120V	Red	1 NO - 1 NC	**52PT6G2A**	**52BT6G2A**
			Green	1 NO - 1 NC	**52PT6G3A**	**52BT6G3A**
			Amber	1 NO - 1 NC	**52PT6G9A**	**52BT6G9A**
			White	1 NO - 1 NC	**52PT6GBA**	**52BT6GBA**
			No Lens	1 NO - 1 NC	**52PT6GNA**	**52BT6GNA**
		240V	Green	1 NO - 1 NC	**52PT6H3A**	**52BT6H3A**
		480V	Clear	1 NO - 1 NC	**52PT6JAA**	**52BT6JAA**

Readily available items are in **bold**.
This is a small representation of stocked items.

Selection Guide

Push Button Mushroom Head Devices – Illuminated[4]

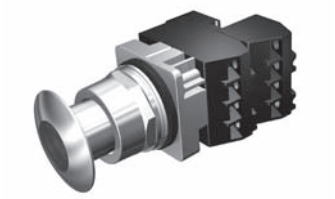

Mushroom Head Metal Ø 1 3/4"

Mushroom Head Plastic Ø 2 1/2"

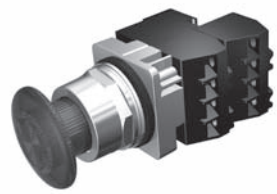

Mushroom Head Plastic Ø 1 3/4"

Part Number	52	____	T	9	____	____	____	____
		a	b	c	d	e	f	g

a

Code	Finish
P	Chrome-Command 52
B	Epoxy Coated-Black Max

b

Code	Type
T	Push Button Operator

c

Code	Function
9	2 positions – momentary in

d

Code	Operation	
	Full Voltage[2] (AC/DC)	
	Incandescent	LED[3]
B	6-8V	6V
C	12-13V	—
D	24-28V	24-28V
E	120V	120V
F	—	240V
	Transformer[2]	
G	120V AC	
H	240V AC	
J	480V AC	
K	600V AC	

e

Code	Style / Color
	Mushroom Head Metal Ø 1 3/4" (44.5mm)
2	Red[1]
3	Green
5	Blue
9	Amber
A	Clear
B	White
	Mushroom Head Plastic Ø 1 3/4" (44.5 mm)
R	Red
S	Green
T	Amber
	Mushroom Head Plastic Ø 2 1/2" (63.5mm)
D	Red[1]
E	Green
F	Amber
	No Head (full voltage & transformer only)
Z	No head

f

Code	Contact Blocks
A	1 NO + 1 NC
B	2 NO + 2 NC
C	3 NO + 3 NC
D	4 NO + 4 NC
E	1 NC (LB)
F	2 NO
G	2 NC
H	1NO (EM)
J	1 NC
K	1 NO

g

Code	Bulb Type
Blank	Incandescent
B	LED
Y	Super-Bright LED[5]

1 Positive opening according to IEC 60947-5-1, Appendix K.

2 Default bulb type is incandescent. For LED options, append field g. LED option not available on units sold "no head".

3 LED voltages apply to table g option code B and Y.
6V and 120V are currently AC only. Replaced by AC/DC rated versions end of 2014.

4 Products available fall 2014.

5 Not available in 240V.

Selection Guide

Selector Switches – Illuminated

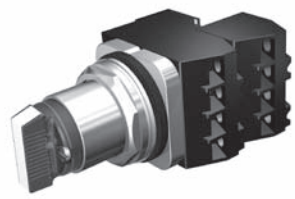

Short Lever – Chrome

Short Lever – Black Max

Part Number	52	S	____	7	____	____	____	____	____	____
		a	b	c	d	e	f	g	h	i

Finish	Style	Cam Type	Function	Color	Contacts	Part Number
Chrome	Maintained	2 Position: CAM A	24-28V AC/DC	No Insert	None	52SA7ADN
Chrome	Maintained	2 Position: CAM A	120V AC (Transformer)	No Insert	None	**52SA7AGN**
Chrome	Maintained	3 Position: CAM C	120V AC	No Insert	None	**52SA7CGN**

Readily available items are in **bold**.
This is a small representation of stocked items.

a

Code	Type
S	Selector Switch

b

Code	Finish
A	Chrome - Command 52
X	Epoxy Coated - Black Max

c

Code	Style
7	Maintained

d

Code	Function
A	2 Position: CAM A
B	3 Position: CAM B
C	3 Position: CAM C

e

Code	Operation	
	Full Voltage[1] (AC/DC)	
	Incandescent	LED[2]
B	6-8V	6V
C	12-13V	—
D	24-28V	24-28V
E	120V	120V
F	—	240V
	Transformer[1]	
G	120V AC	
H	240V AC	
J	480V AC	
K	600V AC	

f

Code	Color
2	Red
3	Green
5	Blue
9	Amber
A	Clear
N	No Insert

g

Code	Contact Blocks
A	1 NO - 1 NC
E	1 NC (LB)
H	1 NO (EM)
J	1 NC
K	1 NO

h

Code	Contact Quantity & Location	
	A CAM & C CAM Left	B CAM Right
0	1	—
1	—	1
3	2	—
4	—	2

i

Code	Bulb Type
Blank	Incandescent
B	LED
Y	Super-Bright LED[3]

1 Default bulb type is incandescent. For LED options, append field i.
LED option not available on units sold "no head".

2 LED voltages apply to table i option code B and Y.
6V and 120V are currently AC only. Replaced by AC/DC rated versions end of 2014.

3 Not available in 240V.

For CAM selection see page 17-341.

Selection Guide

Selector Switch – Non-Illuminated

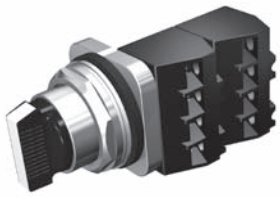

Short Lever

Long Lever

Part Number	52	S		2					
		a	b	c	d	e	f	g[2]	h[2]

a

Code	Type
S	Selector Switch

b

Code	Finish
A	Chrome - Short Lever
B	Chrome - Long Lever
X	BlackMax - Short Lever
W	BlackMax - Long Lever

c

Code	Style
2	Non-Illuminated

d

Code	Function
A	2 Position: CAM A
B	3 Position: CAM B
C	3 Position: CAM C [1]
D	3 Position: CAM D
E	3 Position: CAM E
G	3 Position: CAM G
H	4 Position: CAM H

e

Code	Type	
	2 Position	
	Maintained	Spring Return
A	All	—
C	Left	Right
	3 Position	
	Maintained	Spring Return
A	All	—
B	Center, Right	Left
C	Center, Left	Right
D	Center	Left, Right
	4 Position	
	Maintained Position	Spring Return
A	All	—

f

Code	Color
2	Red
3	Green
4	Yellow
5	Blue
6	Gray
8	Orange
B	White
N	No Insert (Black)

g[2]

Code	Contact Blocks
A	1 NO - 1 NC
E	1 NC (LB)
H	1 NO (EM)
J	1 NC
K	1 NO

h[2]

Code	Contact Quantity & Location	
	Left	Right
0	1	—
1	—	1
2	1	1
3	2	—
4	—	2
5	2	1
6	1	2
7	2	2
8	3	—
9	—	3

1 C CAM on spring return selectors is limited to 4 contact blocks.
For CAM selection see page 17-341.

2 For operator without contact blocks leave positions g and h blank.

Selector Switch, Non-Illuminated[1)]

Contact Type	Contact	Switch Position Left	Switch Position Right	Type M = Maintained S = Spring Return	Chrome Short Lever	Chrome Long Lever	Black Max Short Lever	Black Max Long Lever
		↖	↗		**2-Position Operator**			
No Contacts	—	—	—	M M	**52SA2AAB**	**52SB2AAB**	**52SX2AAB**	**52SW2AAB**
				M<---S	**52SA2ACB**	**52SB2ACB**	**52SX2ACB**	52SW2ACB
1 N.O.	A	O	X	M M	**52SA2AABK1**	**52SB2AABK1**	**52SX2AABK1**	**52SW2AABK1**
				M<---S	**52SA2ACBK1**	**52SB2ACBK1**	**52SX2ACBK1**	**52SW2ACBK1**
1 N.O.	A	O	X	M M	**52SA2AABA1**	**52SB2AABA1**	**52SX2AABA1**	**52SW2AABA1**
1 N.C.	B	X	O	M<---S	**52SA2ACBA1**	**52SB2ACBA1**	**52SX2ACBA1**	**52SW2ACBA1**

Contact Type	Contact	Switch Position Left	Switch Position Center	Switch Position Right	Type M = Maintained S = Spring Return	Chrome Short Lever	Chrome Long Lever	Black Max Short Lever	Black Max Long Lever
		↖	↑	↗		**3-Position Operator**			
No Contacts	—	—	—	—	M M M	**52SA2CAB**	**52SB2CAB**	**52SX2CAB**	**52SW2CAB**
					M M M	**52SA2BAB**	**52SB2BAB**	**52SX2BAB**	**52SW2BAB**
					S--->M M	**52SA2BBB**	52SB2BBB	**52SX2BBB**	52SW2BBB
					M M<----S	**52SA2BCB**	**52SB2BCB**	52SX2BCB	52SW2BCB
					S--->M<---S	**52SA2BDB**	**52SB2BDB**	**52SX2BDB**	**52SW2BDB**
1 N.O.	A	O	O	X	M M M	**52SA2CABA1**	**52SB2CABA1**	**52SX2CABA1**	**52SW2CABA1**
					S--->M M	**52SA2CBBA1**	**52SB2CBBA1**	**52SX2CBBA1**	52SW2CBBA1
1 N.C.	B	X	O	O	M M<----S	**52SA2CCBA1**	**52SB2CCBA1**	**52SX2CCBA1**	**52SW2CCBA1**
					S--->M<---S	**52SA2CDBA1**	**52SB2CDBA1**	**52SX2CDBA1**	**52SW2CDBA1**
1 N.O.	A	O	O	X	M M M	**52SA2CABA2**	**52SB2CABA2**	**52SX2CABA2**	**52SW2CABA2**
1 N.C.	B	X	O	O	S--->M M	**52SA2CBBA2**	**52SB2CBBA2**	**52SX2CBBA2**	52SW2CBBA2
1 N.O.	C	O	O	X	M M<----S	**52SA2CCBA2**	**52SB2CCBA2**	**52SX2CCBA2**	**52SW2CCBA2**
1 N.C.	D	X	O	O	S--->M<---S	**52SA2CDBA2**	**52SB2CDBA2**	**52SX2CDBA2**	**52SW2CDBA2**
1 N.O.	A	O	O	X					
1 N.C.	B	X	O	O	M M M	**52SA2GABJ2K1**	**52SB2GABJ2K1**	**52SX2GABJ2K1**	**52SW2GABJ2K1**
1 N.C.	C	O	X	O					

Contact Type	Contact	Switch Position Left	Switch Position Left Center	Switch Position Right Center	Switch Position Right	Type M = Maintained S = Spring Return	Chrome Short Lever	Chrome Long Lever	Black Max Short Lever	Black Max Long Lever
		↖	↖	↗	↗		**4-Position Operator**			
No Contacts	—	—	—	—	—	M M M M	**52SA2HAB**	**52SB2HAB**	**52SX2HAB**	52SW2HAB
1 N.O.	A	X	O	O	O					
1 N.C.	B	O	X	O	O	M M M M	**52SA2HABJ2K1**	52SB2HABJ2K1	52SX2HABJ2K1	52SW2HABJ2K1
1 N.C.	C	O	O	X	O					
1 N.O.	A	O	O	O	X					
1 N.O.	B	X	O	O	O	M M M M	**52SA2HABJ2K2**	**52SB2HABJ2K2**	52SX2HABJ2K2	52SW2HABJ2K2
1 N.C.	C	O	X	O	O					
1 N.C.	D	O	O	X	O					

Note: X = Closed / O = Open

1) Readily available items are in **bold**.

This is a small representation of stocked items.

Selection Guide

Keyed Selector Switch

Part Number	52	S	C	____	____	____	____	____	____
		a	b	c	d	e	f [3]	g [3]	h

a

Code	Type
S	Selector Switch

b

Code	Finish
C	Chrome – Command 52

c

Code	Style
5	Non-Standard Lock/Key[1a]
6	Standard Lock/Key

d

Code	Function
A	2 Position: CAM A
B	3 Postion: CAM B
C	3 Postion: CAM C [2]
D	3 Postion: CAM D
E	3 Postion: CAM E
G	3 Postion: CAM G
H	4 Postion: CAM H

e

Code	Lock Type				
	2 Position				
	Maintained / Spring Return		Key Removal		
			Left	Right	
E	All Maintained		X	X	
F	All Maintained		X	—	
G	All Maintained		—	X	
X	Spring from Right		X	—	
	3 Position				
	Maintained Position	Spring Return	Key Removal		
			Left	Center	Right
E	All	—	X	X	X
F	All	—	X	—	—
G	All	—	—	—	X
H	All	—	—	X	—
J	All	—	X	—	X
K	All	—	X	X	—
M	All	—	—	X	X
T	Center, Right	Left	—	X	—
U	Left, Center	Right	—	X	—
V	Center	Left, Right	—	X	—
W	Center, Right	Left	—	—	X
Y	Center, Right	Left	—	X	X
Z	Left, Center	Right	X	X	X
	4 Position				
	Maintained Position	Key Removal			
		Left	Left Center	Right Center	Right
E	All	X	X	X	X
F	All	X	—	—	—
G	All	—	—	—	X

f[3]

Code	Contact Blocks
A	1 NO - 1 NC
J	1 NC
K	1 NO
E	1 NC (LB)
H	1 NO (EM)

g[3]

Code	Contact Quantity & Location	
	Left	Right
0	1	—
1	—	1
2	1	1
3	2	—
4	—	2
5	2	1
6	1	2
7	2	2
8	3	—
9	—	3

h

Code	Key Type[1b]
Blank	501CH
X298	550CH
X299	549CH
X300	548CH
X301	547CH
X302	506CH

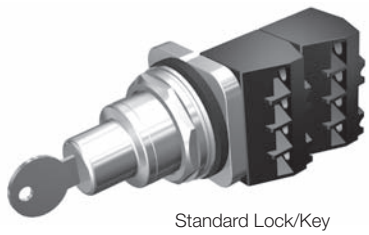

Standard Lock/Key

1a. To Order 1 to 25 special locks for keyed selector switches simply replace the 6 in the 5th digit of the catalog number with a 5 when entering your order.

(Ordering Example: 52SC6AE is changed to 52SC5AE and all locks - up to 25 will be unique).

1b. b. To order the specific lock types shown in table **h**, simply append the corresponding "X" suffix to a standard part number (Ordering Example: 52SC6AEX298).

Note: Same list price applies as standard keyed locks.

2. C CAM on spring return selectors is limited to 4 contact blocks. For CAM selection see page 17-341.

3 For operator without contact blocks leave positions f and g blank.

Key-operated Selector Switch, Non-Illuminated[1)]

Contact Type	Contact	Switch Position: Left	Switch Position: Right	Type: M = Maintained S = Spring Return	Key Removal: Left	Key Removal: Both
					2-Position Operator	
No Contacts	—	—	—	M M	**52SC6AF**	**52SC6AE**
				M<---S	**52SC6AX**	—
1 N.O.	A	O	X	M M	**52SC6AFK1**	**52SC6AEK1**
				M<---S	**52SC6AXK1**	—
1 N.O.	A	O	X	M M	**52SC6AFA1**	**52SC6AEA1**
1 N.C.	B	X	O	M<---S	**52SC6AXA1**	—

Contact Type	Contact	Switch Position: Left	Switch Position: Center	Switch Position: Right	Type: M = Maintained S = Spring Return	Key Removal: Left	Key Removal: Right	Key Removal: Center	Key Removal: Left & Center	Key Removal: Left & Right	Key Removal: Center & Right	Key Removal: All Positions
						3-Position Operator						
No Contacts	—	—	—	—	M M M	52SC6CF	52SC6CG	52SC6CH	52SC6CK	52SC6CJ	52SC6CM	**52SC6CE**
					M M M	**52SC6BF**	**52SC6BG**	52SC6BH	52SC6BK	52SC6BJ	52SC6BM	**52SC6BE**
					S--->M M	—	52SC6BW	52SC6BT	—	—	52SC6BY	—
					M M<----S	—	—	52SC6BU	52SC6BZ	—	—	—
					S--->M<---S	—	—	52SC6BV	—	—	—	—
1 N.O.	A	O	O	X	M M M	52SC6CFA1	52SC6CGA1	52SC6CHA1	52SC6CKA1	52SC6CJA1	52SC6CMA1	**52SC6CEA1**
					S--->M M	—	52SC6CWA1	52SC6CTA1	—	—	52SC6CYA1	—
1 N.C.	B	X	O	O	M M<----S	—	—	52SC6CUA1	52SC6CZA1	—	—	—
					S--->M<---S	—	—	52SC6CVA1	—	—	—	—
1 N.O.	A	O	O	X	M M M	52SC6CFA2	52SC6CGA2	52SC6CHA2	52SC6CKA2	52SC6CJA2	52SC6CMA2	**52SC6CEA2**
1 N.C.	B	X	O	O	S--->M M	—	52SC6CWA2	52SC6CTA2	—	—	52SC6CYA2	—
1 N.O.	C	O	O	X	M M<----S	—	—	52SC6CUA2	52SC6CZA2	—	—	—
1 N.C.	D	X	O	O	S--->M<---S	—	—	52SC6CVA2	—	—	—	—
1 N.O.	A	O	O	X	M M M	52SC6GFJ2K1	52SC6GGJ2K1	52SC6GHJ2K1	52SC6GKJ2K1	52SC6GJJ2K1	52SC6GMJ2K1	**52SC6GEJ2K1**
1 N.C.	B	X	O	O								
1 N.C.	C	O	X	O								

Contact Type	Contact	Switch Position: Left	Switch Position: Left Center	Switch Position: Right Center	Switch Position: Right	Type: M = Maintained S = Spring Return	Key Removal: Right	Key Removal: All Positions
							4-Position Operator	
No Contacts	—	—	—	—	—	M M M M	**52SC6HG**	52SC6HE
1 N.O.	A	X	O	O	O	M M M M	52SC6HGJ2K1	52SC6HEJ2K1
1 N.C.	B	O	X	O	O			
1 N.C.	C	O	O	X	O			
1 N.O.	A	O	O	O	X	M M M M	52SC6HGJ2K2	52SC6HEJ2K2
1 N.O.	B	X	O	O	O			
1 N.C.	C	O	X	O	O			
1 N.C.	D	O	O	X	O			

Note: X = Closed / O = Open

All Operatores listed above are furnished with Lock No. 501CH

1) Readily available items are in bold.

This is a small representation of stocked items.

Selection Guide

Selector Push Button

Part Number	52	S	A				
		a	b	c	d	e	f [1]

Finish	Style	Function	Color	Contacts	Part Number
Chrome	Flush Selector Push Button	2 Position CAM Q	Black	None	**52SA3Q1**
Chrome	Flush Selector Push Button	2 Position CAM R	Black	None	52SA3R1
Chrome	Flush Selector Push Button	2 Position CAM P	Black	None	52SA3P1

Readily available items are in **bold**.
This is a small representation of stocked items.

Selector Push Buttons

a

Code	Type
S	Selector Push Buttons

b

Code	Finish
A	Chrome - Command 52

c

Code	Style
3	Flush Button
4	Extended Button - 1/2”

d

Code	Function
P	2 Position: CAM P
Q	2 Position: CAM Q
R	2 Position: CAM R
S	3 Position: CAM S

e

Code	Color
1	Black
2	Red

f [1]

Code	Contact Blocks							
	CAM P (2 Selector Position)							
	Left		Center		Right		Contact Blocks	Mounting Position
	N	D	N/A	N/A	N	D		
J0	X	O	—	—	O	O	NC	Left
K0	O	X	—	—	X	X	NO	Left
	CAM Q (2 Selector Position)							
	Left		Center		Right		Contact Blocks	Mounting Position
	N	D	N/A	N/A	N	D		
J0	X	X	—	—	O	O	NC	Left
J1	X	O	—	—	O	O	NC	Right
K0	O	O	—	—	O	X	NO	Left
K1	O	X	—	—	O	X	NO	Right
	CAM R (2 Selector Position)							
	Left		Center		Right		Contact Blocks	Mounting Position
	N	D	N/A	N/A	N	D		
J0	X	X	—	—	X	O	NC	Left
J1	X	O	—	—	X	X	NC	Left
K0	O	O	—	—	O	X	NO	Right
K1	O	X	—	—	O	O	NO	Right
	CAM S (3 Selector Position)							
	Left		Center		Right		Contact Blocks	Mounting Position
	N	D	N	D	N	D		
J0	X	O	O	O	O	O	NC	Left
J1	X	O	X	X	O	O	NC	Right
K0	O	O	O	X	O	X	NO	Left
K1	O	X	O	O	O	X	NO	Right

Note: X = Closed / O = Open 1 For operator without contact blocks leave position f blank

Selection and ordering data

	Version	Ohms / color	Order no.	Pack
				Unit
	Potentiometer operator 2 Watts, 500 V AC/DC (NEMA Type 4)	50	**52MA3B01**	1
		150	**52MA3B03**	
		250	**52MA3B04**	
		500	**52MA3B06**	
		750	**52MA3B07**	
		1 K	**52MA3B08**	
		2.5 K	**52MA3B10**	
		5 K	**52MA3B12**	
		10 K	**52MA3B14**	
		15 K	**52MA3B15**	
		25 K	**52MA3B16**	
		50 K	**52MA3B18**	
		100 K	**52MA3B20**	
		150 K	**52MA3B21**	
		250 K	**52MA3B22**	
		500 K	**52MA3B24**	
		1 M	**52MA3B26**	
		1.5 M	**52MA3B27**	
		2 M	**52MA3B28**	
		5 M	**52MA3B31**	
	2 Button maintained operator	black (flush) / red (flush)	**52MP2A1A2**	1
		black (flush) / red (extended)	**52MP2A1B2**	
		black (flush) / yellow (mushroom)	**52MP2A1W4**	
		green (flush) / red (flush)	**52MP2A3A2**	
		green (flush) / red (extended)	**52MP2A3B2**	
		green (flush) / red (mushroom)	**52MP2A3W2**	
		green (flush) / green (mushroom)	**52MP2A3W3**	
	Button remains depressed when pushed	less caps	**52MP2**	
	Wobble stick 2.5” operator For use with 52BAJ (NC) contact block	red	**52ABW2**①	1
		green	**52ABW3**①	
		grey	**52ABW6**①	
	Maintained toggle operator		**52ABT**	1

① For use with 52BAJ (NC) contact block

Selection and ordering data

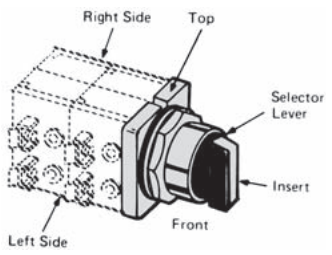

Ordering Information

- Contact blocks are ordered separately, see page 17-341
- Determine which table to use based upon the type of selector (non-illum selector switch-top, illum selector switch-middle, and selector pushbutton-bottom).
- Find the correct number of selector positions (2, 3 or 4 positions).
- Select the contact operation required for each selector position. X indicates the contacts are closed, while O indicates the contacts are open. (For the selector pushbutton, N=normal and D=depressed). Contact block must be assembled in position shown for each circuit application.
- Identify the CAM letter required for the chosen contact operation (only 1 CAM can be used per selector switch or selector pushbutton).
- Contact blocks must be assembled in the position shown for each circuit application. The mounting position is viewed from the front of the device.

Ordering CAMs D, E or G

- CAM D, E or G may be ordered at the same price by changing the 6th character of the selector catalog number. Example: Selector with D cam **52SX2**D**AB.**

Size Requirements

- C CAM on spring return selectors is limited to 4 contact blocks.
- Selector operators in enclosures are limited to depth of 1 contact block. (2 blocks wide).

Non-illuminated and keyed selector switches (viewed from front)

2 Selector Positions Left	Right	Contact Blocks	CAM	Mounting Left		Right
X	O	NC (52BAJ)	A	L	or	R
O	X	NO (52BAK)	A	L	or	R

3 Selector Positions Left	Center	Right	Contact Blocks	CAM	Mounting Left		Right
X	O	O	NO (52BAK)	B			R
O	O	X	NO (52BAK)	B	L		
X	X	O	NC (52BAJ)	B	L		
O	X	X	NC (52BAJ)	B			R
X	O	X	2NO (2-52BAK)	B	L	and	R
X	O	O	NC (52BAJ)	C	L	or	R
O	O	X	NO (52BAK)	C	L	or	R
O	X	O	NC (52BAJ)	D	L	or	R
O	O	X	NO (52BAK)	D	L	or	R
X	O	O	NO (52BAK)	E	L	or	R
O	X	O	NC (52BAJ)	E	L	or	R
X	O	O	NC (52BAJ)	G	L		
O	X	O	NC (52BAJ)	G			R
O	O	X	NO (52BAK)	G	L	or	R

4 Selector Positions Left	Left Center	Right Center	Right	Contact Blocks	CAM	Mounting Left	Right
X	O	O	O	NO (52BAK)	H		R
O	X	O	O	NC (52BAJ)	H	L	
O	O	X	O	NC (52BAJ)	H		R
O	O	O	X	NO (52BAK)	H	L	

Illuminated selector switches (viewed from front)

2 Selector Positions Left	Right	Contact Blocks	CAM	Mounting Left	Right
X	O	NC (52BAJ)	A	L	
O	X	NO (52BAK)	A	L	

3 Selector Positions Left	Center	Right	Contact Blocks	CAM	Mounting Left	Right
O	O	X	NC (52BAJ)	B		R
O	X	O	NO (52BAK)	B		R
X	O	O	NC (52BAJ)	C	L	
O	O	X	NO (52BAK)	C	L	

Selector Pushbuttons (viewed from front)

2 Selector Positions Left N	Left D	Right N	Right D	Contact Blocks	CAM	Mounting Left		Right
X	O	O	O	NC (52BAJ)	Q			R
X	X	O	O	NC (52BAJ)	Q	L		
O	X	O	X	NO (52BAK)	Q			R
O	O	O	X	NO (52BAK)	Q	L		
X	O	O	O	NC (52BAJ)	P	L	or	R
O	X	X	X	NO (52BAK)	P	L	or	R
X	X	X	O	NC (52BAJ)	R	L		
X	O	X	X	NC (52BAJ)	R			R
O	X	O	O	NO (52BAK)	R			R
O	O	O	X	NO (52BAK)	R	L		

3 Selector Positions Left N	Left D	Center N	Center D	Right N	Right D	Contact Blocks	CAM	Mounting Left	Right
X	O	O	O	O	O	NC (52BAJ)	S	L	
X	O	X	X	O	O	NC (52BAJ)	S		R
O	X	O	O	O	X	NO (52BAK)	S		R
O	O	O	X	O	X	NO (52BAK)	S	L	

Selection and ordering data

Assembled Non-illuminated Selector Switches

- Determine contact block and location from above.
- Select block suffix. Ex: **J** = **52BAJ**.
- Now select position suffix.
- **1-52BAJ** block mounted on right side, suffix will be **J 1**.
- Additional suffixes allow for multiple quantities and locations.
- Repeat process for next block if required.
- Add list price of blocks to operator list price.
- Consult factory for delivery.

Example 1: X O O
O O X
HAND-OFF-AUTO Maintained Switch
Catalog No **52SA2CAB A 1 = 52A2CABA1**
(**52BJK** block mounted on right side)

Example 2: X O O **52BAJ** (L)
O X O **52BAJ** (R)
O O X **52BAK** (L or R) **}K1**
G Cam required
Catalog No **52SA2GAB J2 K1 = 52SA2GABJ2K1**

Block Suffix

A = 1 NO - 1 NC, **52BJK**
E = NC Late Break, **52BAE**
H = NO Early Make, **52BAH**
J = NC, **52BAJ**
K = NO, **52BAK**

Position Suffix

Suffix	Quantity and Location Left	Quantity and Location Right
0	1	—
1	—	1
2	1	1
3	2	—
4	—	2
5	2	1
6	1	2
7	2	2
8	3	—
9	—	3

Selection and ordering data

	Version	Suitable for	Color	Order no.
	Flush actuator lens cap The 52RC1 Screw-on style caps shown are used on the new 52BM8 & 52PM8 Pushbutton Operators. To order Snap-on style replacement caps for the old style 52PA8 & 52PX8 Pushbutton Operators change the 4th character from "C" to "A" (i.e. 52RA1A1).	For flush type, non-illuminated pushbuttons bag of 5 caps	black red green yellow blue gray orange kit- all colors	**52RC1A1** **52RC1A2** **52RC1A3** **52RC1A4** **52RC1A5** **52RC1A6** **52RC1A8** **52RC1AN**
	Extended actuator lens cap The 52RC1 Screw-on style caps shown are used on the new 52BM8 & 52PM8 Pushbutton Operators. To order Snap-on style replacement caps for the old style 52PA8 & 52PX8 Pushbutton Operators change the 4th character from "C" to "A" (i.e. 52RA1B1).	For extended type, non-illuminated pushbuttons bag of 5 caps	black red green yellow blue gray orange 1 of each color cap	**52RC1B1** **52RC1B2** **52RC1B3** **52RC1B4** **52RC1B5** **52RC1B6** **52RC1B8** **52RC1BN**
	Mushroom head cap - Plastic set-screw type replacement caps are for discontinued 52PB9 and 52PX9 operators only	For large 2 1/2"(63.5mm) type, set screw non-illuminated mushroom pushbuttons	black red green yellow blue gray orange 1 kit of each color cap	**52RB3E1** **52RB3E2** **52RB3E3** **52RB3E4** **52RB3E5** **52RB3E6** **52RB3E8** **52RB3EN**
		For small 1 5/8"(41.3mm) type, non-illuminated mushroom pushbuttons	black red green yellow blue gray orange 1 of each color cap	**52RB3D1** **52RB3D2** **52RB3D3** **52RB3D4** **52RB3D5** **52RB3D6** **52RB3D8** **52RB3DN**
	Mushroom head cap - Metal set-screw type	For small 1 5/8"(41.3mm) type, set screw non-illuminated mushroom pushbuttons	chrome red green	**52RB3FC** **52RB3F2** **52RB3F3**
	Replacement Lens for Indicator Lights	For catalog numbers starting with 52PL or 52BL①②		
		Plastic	red green blue amber clear white 1 of each color	**52RA4S2** **52RA4S3** **52RA4S5** **52RA4S9** **52RA4SA** **52RA4SB** **52RA4SN**
		Glass	red green blue amber clear white 1 of each color	**52RA4T2** **52RA4T3** **52RA4T5** **52RA4T9** **52RA4TA** **52RA4TB** **52RA4TN**
	Replacement Lens forPush to Test/ Illuminated Pushbuttons The 52RA5S Raised lens caps shown are used on the 52BT6 & 52PT6 PTT/Illuminated Pushbutton Operators. To order Flush lens caps for the new style 52BT8 & 52PT8 PTT/ Illuminated Pushbutton Operators change the 52RA5S prefix to 52RC5P (i.e. 52RC5P2).	For catalog numbers starting with 52PT or 52BT②③ Plastic	red green blue amber clear white	**52RA5S2** **52RA5S3** **52RA5S5** **52RA5S9** **52RA5SA** **52RA5SB**

① To order replacement lens for indicator lights starting with 52PA, 52PE, or 52PX, change the 6th digit to P for plastic and G for glass.

② It is possible to retrofit catalog numbers starting with 52PA, 52PE and 52PX with the replacement lens. The new lens have concentric ribs for improved light distribution.

③ To order replacement lens for push to test / illuminated pushbuttons starting with 52PA, 52PE, or 52PX, change the 6th digit to a P.

Selection and ordering data

	Version	Suitable for	Color	Order no.
	Mushroom head push pull illuminated plastic screw-on type	For small 1 3/4" type, push-pull units	red	**52RC3JR**
			green	**52RC3JS**
			amber	**52RC3JT**
		For large 2 1/2" type, push-pull units	red	**52RC3KR**
			green	**52RC3KS**
			amber	**52RC3KT**
	Mushroom head push pull illuminated metal screw-on type	Chrome, for small 1 3/4" type, push-pull units	red	**52RB3H2**
			green	**52RB3H3**
			amber	**52RB3H9**
			white	**52RB3HB**
		BlackMax, for small 1 3/4" type, push-pull units	red	**52RX3H2**
			green	**52RX3H3**
			amber	**52RX3H9**
			white	**52RX3HB**
	Mushroom head push pull non-illuminated plastic screw-on type	For small 1 3/4" type, push-pull units (catalog numbers starting with 52PP, 52BP, 52PM9 or 52BM9)①	black	**52RC3D1**
			red	**52RC3D2**
			green	**52RC3D3**
			yellow	**52RC3D4**
			blue	**52RC3D5**
			gray	**52RC3D6**
			orange	**52RC3D8**
			1 of each color	**52RC3DN**
		For large 2 1/2" type, push-pull units (catalog numbers starting with 52PP, 52BP, 52PM9 or 52BM9)①	black	**52RC3E1**
			red	**52RC3E2**
			green	**52RC3E3**
			yellow	**52RC3E4**
			blue	**52RC3E5**
			gray	**52RC3E6**
			orange	**52RC3E8**
			1 of each color	**52RC3EN**
	Mushroom head push pull non-illuminated metal screw-on type	For small 1 3/4" type, push-pull units (catalog numbers starting with 52PP or 52BP)①	red	**52RC3F2**
			green	**52RC3F3**
			chrome	**52RC3FC**
	Twist to release head illuminated plastic screw-on type	For small twist to release units	red	**52RC3RR**
			green	**52RC3RS**
			amber	**52RC3RT**
	Twist to release head non-illuminated plastic screw-on type	For small twist to release units	red	**52RC3R2**
			green	**52RC3R3**
			yellow	**52RC3R4**
	Replacement lens kit for Illuminated selector switches (Knob with Insert)		red	**52RA6P2**
			green	**52RA6P3**
			blue	**52RA6P5**
			amber	**52RA6P9**
			clear	**52RA6PA**
			white	**52RA6PB**
	Lever inserts		red	**52RA2A2**
	Short lever		green	**52RA2A3**
			yellow	**52RA2A4**
			blue	**52RA2A5**
			gray	**52RA2A6**
			orange	**52RA2A8**
			white	**52RA2AB**
	Long lever		red	**52RA2B2**
			green	**52RA2B3**
			yellow	**52RA2B4**
			blue	**52RA2B5**
			gray	**52RA2B6**
			orange	**52RA2B8**
			white	**52RA2BB**

① For push-pull units whose catalog numbers that start with 52PX, 52PA or 52PE, replacement heads are available. Order from the 52RB type "Mushroom head pushbutton cap" section on page 17-341.

Selection and ordering data

	Version	Suitable for	Color	Order no.
	Protective boot Offers protection from ice and foreign substances from interfering with button operation	Flush pushbutton operations	clear black	**52AABA** **52AAB1**
	Guards Prevents accidental operation	Non-illuminated basic pushbuttons	chrome blackmax	**52AAGP** **52AXGP**
		1 5/8" mushroom pushbuttons, 1 3/4" push-pull units①, and twist to release units	chrome blackmax	**52AAGM** **52AXGM**
		Push to test/illuminated pushbutton and indicator lights	chrome blackmax	**52AAGL** **52AXGL**
	EMERGENCY-STOP Lock Out	Class 52 Illuminated Mushroom Head Pushbuttons; 304 Stainless Steel	chrome (304 SS)	**52AALE**
	EMERGENCY-STOP Backing Ring	Yellow 90mm E-STOP Backing Ring		**52AAR**
	Locknuts Replacement front ring	Non-illuminated basic pushbuttons	chrome blackmax	**52AANP** **52AXNP**
		Non-illuminated mushroom pushbuttons	chrome blackmax	**52AANL** **52AXNL**
		Push-pull and twist-to-release units (only for push-pull units starting with 52PP or 52BP)②	chrome blackmax	**52CANP** **52CXNP**
		Indicator Lights	blue amber	**52AANL** **52AXNL**
		Selector switches	chrome blackmax	**52AANS** **52AXNS**
	Mounting Accessories	Class 52 Trim Washer Kit (Set of 10 pcs) Class 52 Washer Kit (Include 2-Neoprene Gaskets, 1-Trim Washer, 1-Index Locking Ring (chrome)	chrome	**52AAQ** **52AAD**
	Padlock attachments	Non-illuminated basic pushbuttons	flush extended	**52AALA** **52AALB**
	Padlock cover Lock devices in off position	Pushbuttons, selector switches, and non-illuminated mushroom heads		**52AALS**
	Lock nut wrench	All devices		**52MAWB**
	Hole plugs		corrosion resistant steel, grey stainless steel	**52AAH6** **52ABH6** **52ABHS**
	Spare keys (Kit includes 1 Key)	Class 52 Standard Keyed Selector Switch.	501CH	**52KEY-501CH**
		Keyed Selector Switch ordered with Suffix X302.	506CH	**52KEY-506CH**
		Keyed Selector Switch ordered with Suffix X301.	547CH	**52KEY-547CH**
		Keyed Selector Switch ordered with Suffix X300.	548CH	**52KEY-548CH**
		Keyed Selector Switch ordered with Suffix X299.	549CH	**52KEY-549CH**
		Keyed Selector Switch ordered with Suffix X298.	550CH	**52KEY-550CH**
	Grounding kit	All devices		**52AL109145**
52 BAJ	**Touchsafe contact blocks with gold flashing**			
	1 NO			**52BAK**
	1 NC			**52BAJ**④
	1 NO - 1 NC			**52BJK**④
52 BAK	1 NO early make	closes before 52BAK		**52BAH**
	1 NC late break	opens after 52 BAJ		**52BAE**
	1 NO - 1 NC	Reed switch; UL listed for class 1 division 2; .25A Max, 200V AC, 10 Watt max .5A Max, 200V DC, 10 Watt max		**52BAR**③
52 BAR	1 NC extra late break			**52BAU**

① These can also be used with the 1 5/8" push-pull devices.

② For push-pull units starting with part numbers 52PA, 52PE or 52PX, replacement locknuts can be ordered using 52AANL (Chrome) and 52AXNL (BlackMax).

③ Hermetically Sealed

④ ⊖ Positive opening according to IEC 60947-5-1, Appendix K.

Selection and ordering data

Version	Suitable for	Lamp voltage	Color	Order no.
Lamps with screw connection, miniature bayonet (BA 9s style)				
Incandescent lamps,				
Flashing, type 267 lamp (replaces 755 lamp)	51, 52	6 V		**52AABNF**
6V type 755 lamp (Rated 150 mA)	51, 52	6 V		**52AABN**
12V type 756 (Rated 80 mA)	51, 52	12 V		**52AACN**
24V type 757 (Rated 80 mA)	51, 52	24 V		**52AADN**
48V, 2W	52	48 V		**3SB1902-1AP**
60V, 2W	52	60 V		**3SR9424**
120V, 2.5W, type #120MB (Rated 250 mA)	52	120 V		**52AAENC1**
Neon (uses resistors) type B2A (NE-51H)	52	120 V		**52AAPN**
Candelabra, 120V, 3W, Full voltage type 3S6/5	52 older revision styles	120 V		**52AAENC**
LED bulbs①				
LED, BA9s type②	Class 52	6 V AC/DC		**52AEB□**
		24 V AC/DC		**52AED□**
		120 V AC/DC		**52AEE□**
Super-Bright LED②	Class 52	6 V AC/DC		**52AEB□7**
		24 V AC/DC		**52AED□7**
		120 V AC/DC		**52AEE□7**
		120 V DC		**52AEV□7**
LED lighting module with integrated LED.				
Single LED (Rated 35 mA Maximum)	Class 52	24 V AC/DC		**52AAIL□**
		120 V AC		**52AAIM□**
		240 V AC		**52AAIN□**
Full voltage lighting module accessory with BA9s type lamp①				
LED②	Class 52	6 V AC/DC		**52AAFB□B**
		24 V AC/DC		**52AAFD□B**
		120 V AC/DC		**52AAFE□B**
Super-Bright LED②	Class 52	6 V AC/DC		**52AAFB□Y**
		24 V AC/DC		**52AAFD□Y**
		120 V AC/DC		**52AAFE□Y**
Incandescent bulb	Class 52	6 V AC/DC		**52AAFB**
		24 V AC/DC		**52AAFD**
		120 V AC/DC		**52AAFE**
Transformer lighting module accessory with BA9s type lamp①				
LED	Class 52	120 V AC		**52AATG□B**
		240 V AC		**52AATH□B**
		480 V AC		**52AATJ□B**
		600 V AC		**52AATK□B**
Super-Bright LED	Class 52	120 V AC		**52AATG□Y**
		240 V AC		**52AATH□Y**
		480 V AC		**52AATJ□Y**
		600 V AC		**52AATK□Y**
Incandescent bulb	Class 52	120 V AC		**52AATGN**
		240 V AC		**52AATHN**
		480 V AC		**52AATJN**
		600 V AC		**52AATKN**

Color options:	
red	**2**
green	**3**
yellow/amber	**4**
blue	**5**
white/clear	**B**

① Standard LED lamps are recommended for indoor applications, Super-Bright LED Lamps are recommended for outdoor applications.

② 6V, 24V (Super Bright only) and 120V are currently AC only. Replaced by AC/DC rated versions end of 2014.

Non-Illuminated Push-Pull
Metal Mushroom Head

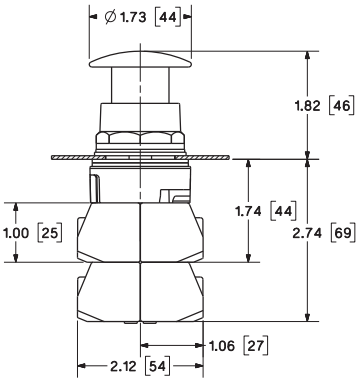

Non-Illuminated Push-Pull
Small Plastic Mushroom Head

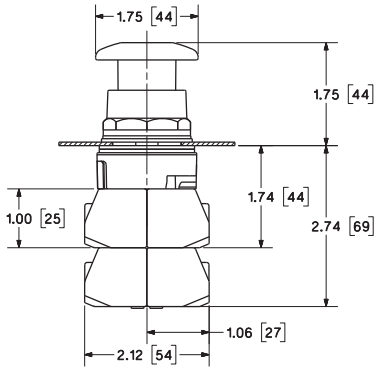

Non-Illuminated Push-Pull
Large Plastic Mushroom Head

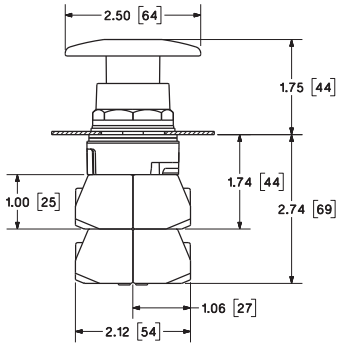

Illuminated Push-Pull
Metal Mushroom Head

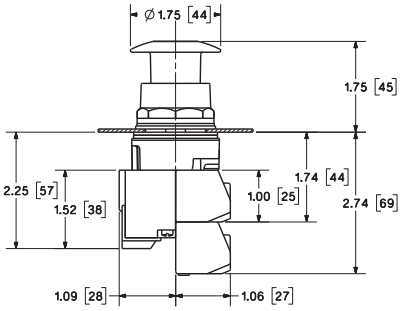

Fully Illuminated Push-Pull
Small Plastic Mushroom Head

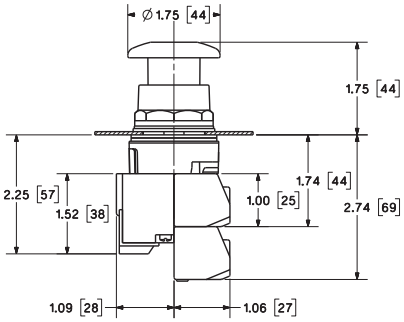

Illuminated Push-Pull
Large Plastic Mushroom Head

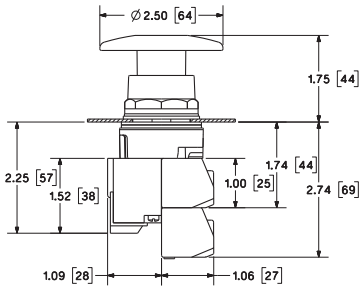

Non-Illuminated Twist Release
Plastic Mushroom Head

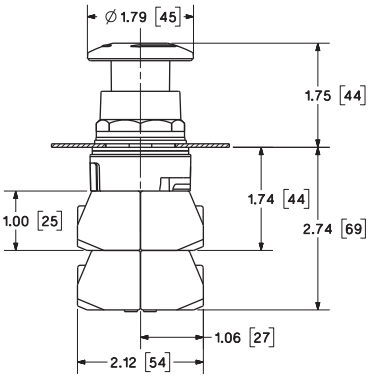

Illuminated Twist Release
Plastic Mushroom Head

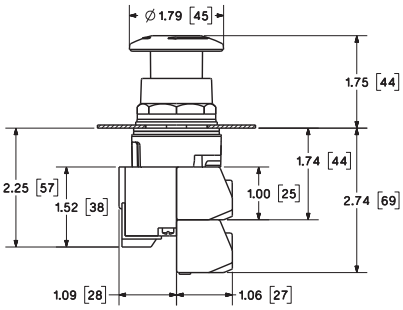

Illuminated Pushbutton Flush Lens
Illuminated Pushbutton Extended Lens
Illuminated Push to Test

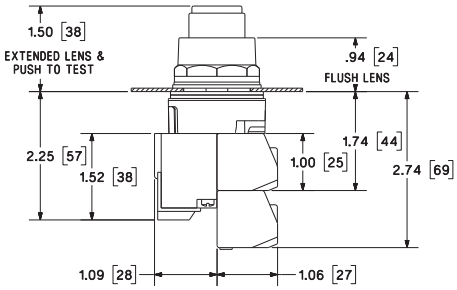

Selector Switch Non-Illuminated

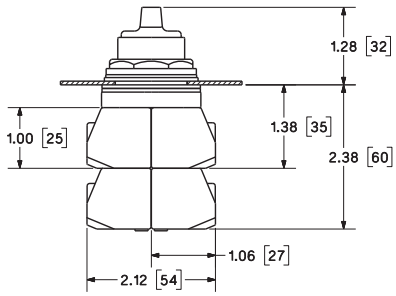

Selector Switch Illuminated

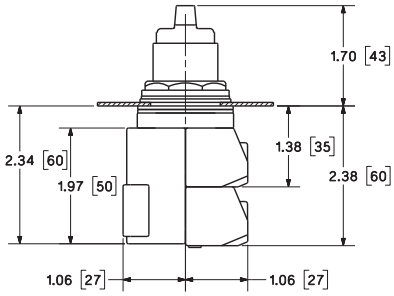

Indicator Light Plastic Lens

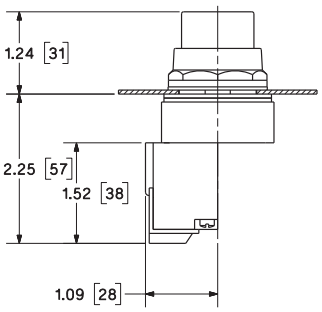

Momentary Pushbutton Non-Illuminated Flush Cap

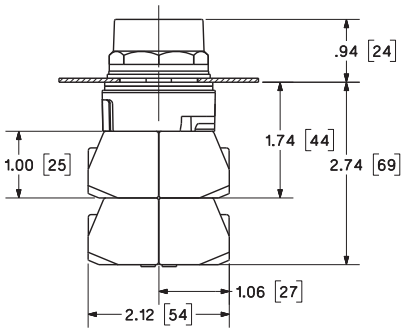

Momentary Pushbutton Non-Illuminated Raised Cap

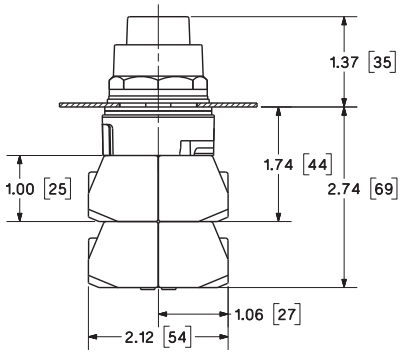

Indicator Light Glass Lens

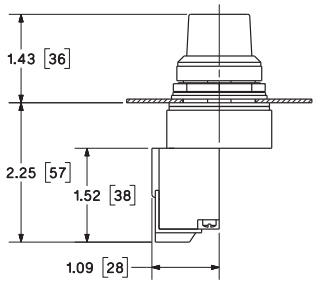

Momentary Pushbutton Metal Mushroom Head

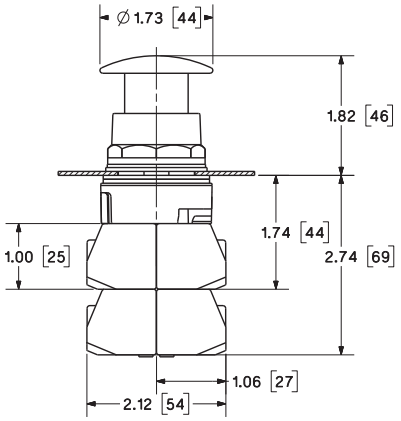

Momentary Pushbutton Small Plastic Mushroom Head

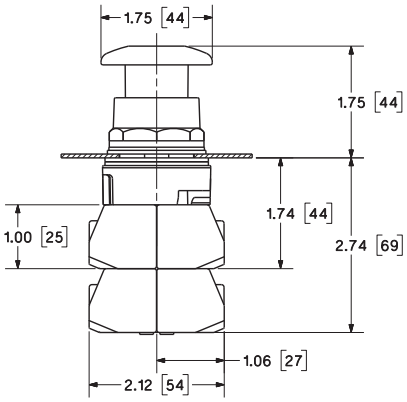

Momentary Pushbutton Large Plastic Mushroom Head

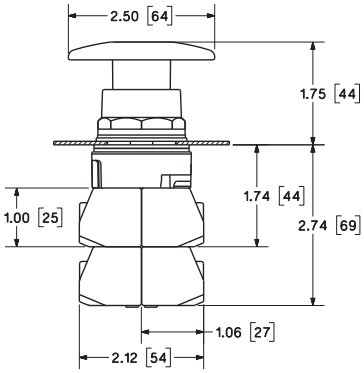

Illuminated Momentary Pushbutton
Metal Mushroom Head

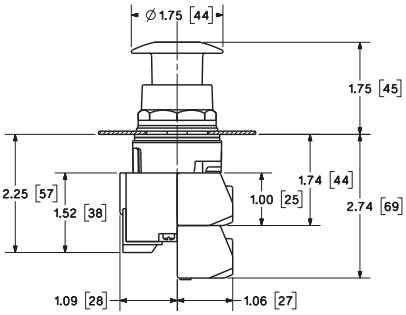

Illuminated Momentary Pushbutton
Small Plastic Mushroom Head

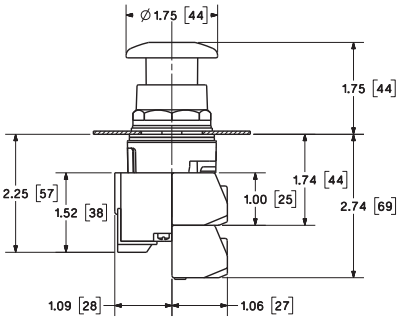

Illuminated Momentary Pushbutton
Large Plastic Mushroom Head

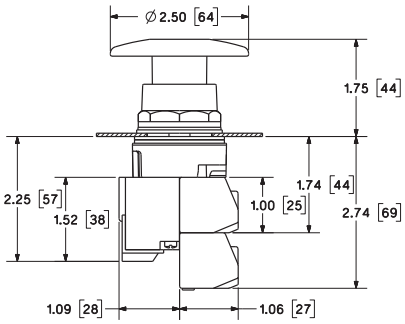

Selector Switch
Keyed

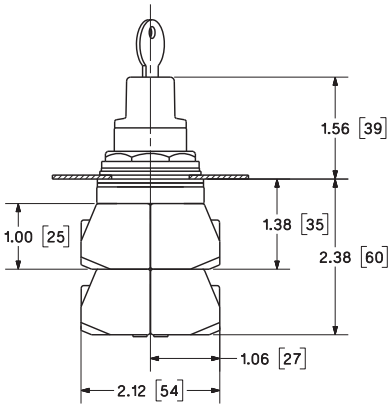

Wobble Switch

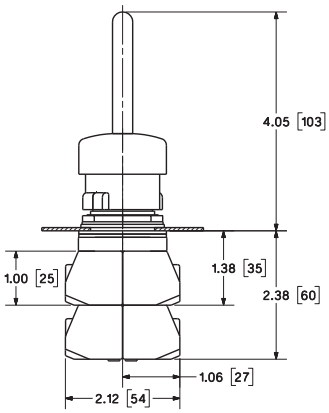

Potentiometer Switch

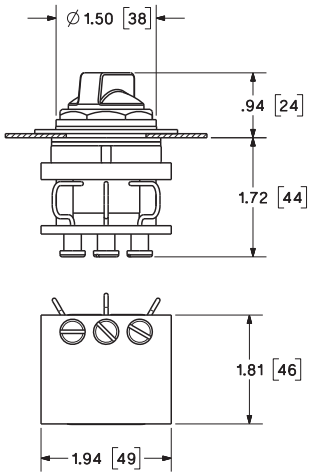

Toggle Switch

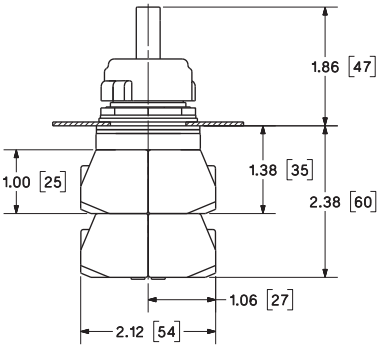

Selector Pushbutton Switch
Flush Cap

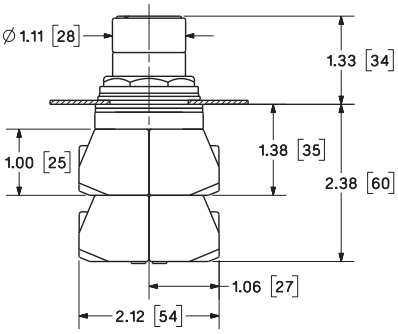

Selector Pushbutton Switch
Raised Cap

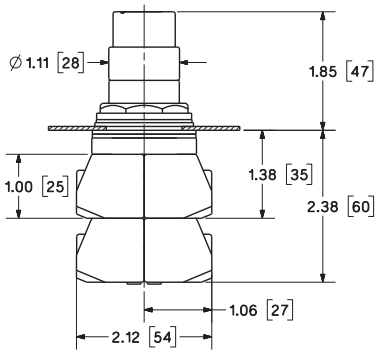

Momentary Pushbutton Guard
Illuminated Push to Test Guard

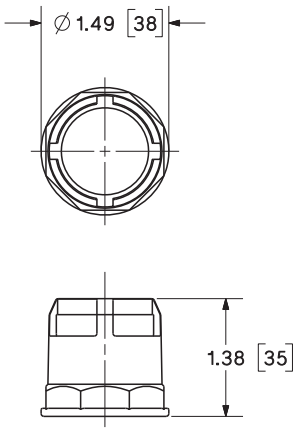

Mushroom Head Guard

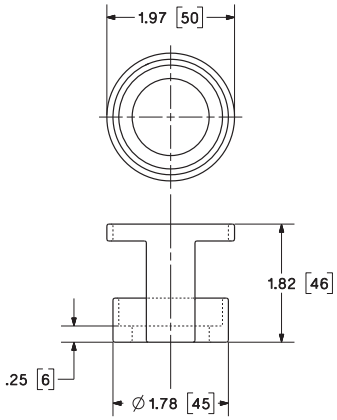

Contact Block

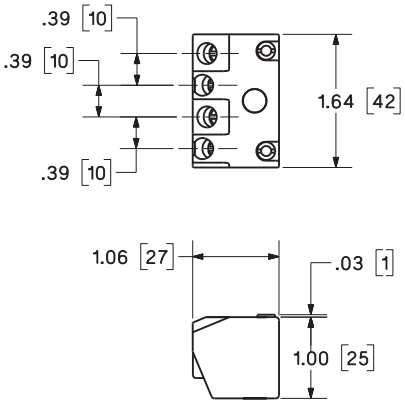

Large Metal Legend Plate

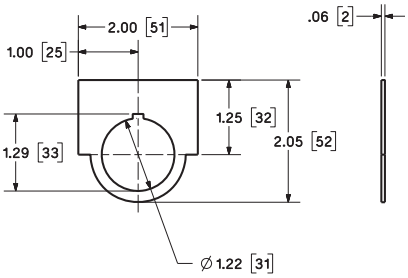

Automotive Metal Legend Plate

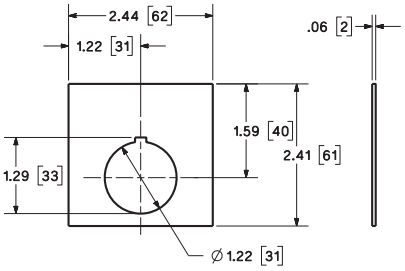

Large Plastic Legend Plate

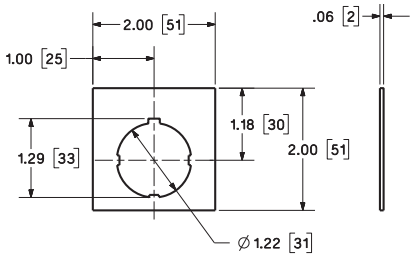

Selection and ordering data

	Actuator identification C = top device in station B = middle device in station A = bottom device in station	Degree of protection①	Contact / voltage	No. of command points	Order no.	Pack Unit
1 unit control station	A = Momentary flush pushbutton black, label "START"	NEMA 12	1NO - 1NC	1	**52C101A**	
	A = Momentary raised pushbutton red, label "STOP"	NEMA 12	1NO - 1NC	1	**52C103A**	
	A = Momentary mushroom head red, label "STOP"	NEMA 12	1NO - 1NC	1	**52C104A**	
	A = Maintained metal mushroom head red, label "EMERGENCY STOP"	NEMA 12	1NO - 1NC	1	**52C117A**	
	A = 2 position selector switch "OFF-ON"	NEMA 12	1NO - 1NC	1	**52C159A**	
	A = 3 position selector switch "HAND-OFF-AUTO"	NEMA 12	1NO - 1NC	1	**52C156A**	
	A = Indicator light, red	NEMA 12	120V Transformer type	1	**52C131A**	
	A = Indicator light, green	NEMA 12	120V Transformer type	1	**52C135A**	
	A = Momentary flush pushbutton black, label "START"	NEMA 4X Stainless Steel	1NO - 1NC	1	**52C101S**	
	A = Momentary raised pushbutton red, label "STOP"	NEMA 4X Stainless Steel	1NO - 1NC	1	**52C103S**	
	A = Momentary mushroom head red, label "STOP"	NEMA 4X Stainless Steel	1NO - 1NC	1	**52C104S**	
	A = Maintained plastic mushroom head red, label "EMERGENCY STOP"	NEMA 4X Stainless Steel	1NO - 1NC	1	**52C116S**	
	A = 2 position selector switch "OFF-ON"	NEMA 4X Stainless Steel	1NO - 1NC	1	**52C159S**	
	A = 3 position selector switch "HAND-OFF-AUTO"	NEMA 4X Stainless Steel	1NO - 1NC	1	**52C156S**	
	A = Momentary flush pushbutton black, label "START"	NEMA 4X Fiberglass	1NO - 1NC	1	**52C101X**	
	A = Momentary raised pushbutton red, label "STOP"	NEMA 4X Fiberglass	1NO - 1NC	1	**52C103X**	
	A = Momentary mushroom head red, label "STOP"	NEMA 4X Fiberglass	1NO - 1NC	1	**52C104X**	
	A = Maintained plastic mushroom head red, label "EMERGENCY STOP"	NEMA 4X Fiberglass	1NO - 1NC	1	**52C116X**	
	A = 2 position selector switch "OFF-ON"	NEMA 4X Fiberglass	1NO - 1NC	1	**52C159X**	
	A = 3 position selector switch "HAND-OFF-AUTO"	NEMA 4X Fiberglass	1NO - 1NC	1	**52C156X**	
2 unit control station	B = Momentary flush pushbutton black, label "START" A = Momentary raised pushbutton red, label "STOP"	NEMA 12	1NO, 1NC 1NO, 1NC	2	**52C201A**	
	B = Momentary flush pushbutton black, label "START" A = Momentary Mushroom head pushbutton red, label "STOP"	NEMA 12	1NO, 1NC 1NO, 1NC	2	**52C202A**	
	B = Momentary flush pushbutton, label "FORWARD" A = Momentary flush pushbutton, label "REVERSE"	NEMA 12	1NO, 1NC 1NO, 1NC	2	**52C204A**	
	B = Momentary flush pushbutton, label "UP" A = Momentary flush pushbutton, label "DOWN"	NEMA 12	1NO, 1NC 1NO, 1NC	2	**52C223A**	
	B = Indicator light, red, label "RUN" A = Maintained selector switch, label "HAND-OFF-AUTO"	NEMA 12	120V Transformer type	2	**52C224A**	
	B = Indicator light, red A = Indicator light, green	NEMA 12	120V Transformer type	2	**52C230A**	
	B = Momentary flush pushbutton black, label "START" A = Momentary raised pushbutton red, label "STOP"	NEMA 4X Stainless Steel	1NO, 1NC 1NO, 1NC	2	**52C201S**	
	B = Momentary flush pushbutton black, label "START" A = Momentary Mushroom head pushbutton red, label "STOP"	NEMA 4X Stainless Steel	1NO, 1NC 1NO, 1NC	2	**52C202S**	
	B = Momentary flush pushbutton, label "UP" A = Momentary flush pushbutton, label "DOWN"	NEMA 4X Stainless Steel	1NO, 1NC 1NO, 1NC	2	**52C223S**	
	B = Indicator light, red, label "RUN" A = Maintained selector switch, label "HAND-OFF-AUTO"	NEMA 4X Stainless Steel	120V Transformer type 1NO, 1NC	2	**52C224S**	
	B = Momentary flush pushbutton black, label "START" A = Momentary raised pushbutton red, label "STOP"	NEMA 4X Fiberglass	1NO, 1NC 1NO, 1NC	2	**52C201X**	
	B = Momentary flush pushbutton black, label "START" A = Momentary Mushroom head pushbutton red, label "STOP"	NEMA 4X Fiberglass	1NO, 1NC 1NO, 1NC	2	**52C202X**	
	B = Momentary flush pushbutton, label "UP" A = Momentary flush pushbutton, label "DOWN"	NEMA 4X Fiberglass	1NO, 1NC 1NO, 1NC	2	**52C223X**	
	B = Indicator light, red, label "RUN" A = Maintained selector switch, label "HAND-OFF-AUTO"	NEMA 4X Fiberglass	120V Transformer type 1NO, 1NC	2	**52C224X**	

① NEMA 4X Stainless Steel Enclosure is 304 SS.

Selection and ordering data

3 unit control station

Actuator identification	Degree of protection①	Contact / voltage	No. of command points	Order no.	Pack Unit
C = Indicator light, red B = Momentary flush pushbutton black, label “START” A = Momentary raised pushbutton red, label “STOP”	NEMA 12	120V 1NO, 1NC 1NO, 1NC 1NO, 1NC	3	**52C307A**	
C = Momentary flush pushbutton black, label “FORWARD” B = Momentary flush pushbutton black, label “REVERSE” A = Momentary raised pushbutton red, label “STOP”	NEMA 12	1NO, 1NC 1NO, 1NC 1NO, 1NC	3	**52C301A**	
C = Momentary flush pushbutton black, label “UP” B = Momentary flush pushbutton black, label “DOWN” A = Momentary raised pushbutton red, label “STOP”	NEMA 12	1NO, 1NC 1NO, 1NC 1NO, 1NC	3	**52C332A**	
C = Momentary flush pushbutton black, label “OPEN” B = Momentary flush pushbutton black, label “CLOSE” A = Momentary raised pushbutton red, label “STOP”	NEMA 12	1NO, 1NC 1NO, 1NC 1NO, 1NC	3	**52C333A**	
C = Momentary flush pushbutton black, label “HI” B = Momentary flush pushbutton, black label “LOW” A = Momentary raised pushbutton red, label “STOP”	NEMA 12	1NO, 1NC 1NO, 1NC 1NO, 1NC	3	**52C334A**	
C = Indicator light, red B = Momentary flush pushbutton black, label “START” A = Momentary raised pushbutton red, label “STOP”	NEMA 4X Stainless Steel	120V 1NO, 1NC 1NO, 1NC 1NO, 1NC	3	**52C307S**	
C = Momentary flush pushbutton black, label “FORWARD” B = Momentary flush pushbutton black, label “REVERSE” A = Momentary raised pushbutton red, label “STOP”	NEMA 4X Stainless Steel	1NO, 1NC 1NO, 1NC 1NO, 1NC	3	**52C301S**	
C = Momentary flush pushbutton black, label “UP” B = Momentary flush pushbutton black, label “DOWN” A = Momentary raised pushbutton red, label “STOP”	NEMA 4X Stainless Steel	1NO, 1NC 1NO, 1NC 1NO, 1NC	3	**52C332S**	
C = Momentary flush pushbutton black, label “OPEN” B = Momentary flush pushbutton black, label “CLOSE” A = Momentary raised pushbutton red, label “STOP”	NEMA 4X Stainless Steel	1NO, 1NC 1NO, 1NC 1NO, 1NC	3	**52C333S**	
C = Momentary flush pushbutton black, label “HI” B = Momentary flush pushbutton, black label “LOW” A = Momentary raised pushbutton red, label “STOP”	NEMA 4X Stainless Steel	1NO, 1NC 1NO, 1NC 1NO, 1NC	3	**52C334S**	
C = Indicator light, red B = Momentary flush pushbutton black, label “START” A = Momentary raised pushbutton red, label “STOP”	NEMA 4X Fiberglass	120V 1NO, 1NC 1NO, 1NC	3	**52C307X**	
C = Momentary flush pushbutton black, label “FORWARD” B = Momentary flush pushbutton black, label “REVERSE” A = Momentary raised pushbutton red, label “STOP”	NEMA 4X Fiberglass	1NO, 1NC 1NO, 1NC 1NO, 1NC	3	**52C301X**	
C = Momentary flush pushbutton black, label “UP” B = Momentary flush pushbutton black, label “DOWN” A = Momentary raised pushbutton red, label “STOP”	NEMA 4X Fiberglass	1NO, 1NC 1NO, 1NC 1NO, 1NC	3	**52C332X**	
C = Momentary flush pushbutton black, label “OPEN” B = Momentary flush pushbutton black, label “CLOSE” A = Momentary raised pushbutton red, label “STOP”	NEMA 4X Fiberglass	1NO, 1NC 1NO, 1NC 1NO, 1NC	3	**52C333X**	
C = Momentary flush pushbutton black, label “HI” B = Momentary flush pushbutton, black label “LOW” A = Momentary raised pushbutton red, label “STOP”	NEMA 4X Fiberglass	1NO, 1NC 1NO, 1NC 1NO, 1NC	3	**52C334X**	

① NEMA 4X Stainless Steel Enclosure is 304 SS.

Selection and ordering data

Standard enclosures come with 2 1/4" leg center for legend spacing. Automotive end plates require 2 1/2 " spacing. For more than 2 contact blocks on the right or left, use extra deep enclosure.

Mounting hole arrangement

1 thu 4 are in one row
6 holes are 3 down and 2 across
9 holes are 3 down and 3 across
12 holes are 4 down and 3 across
16 holes are 4 down and 4 across

Version	Number of command points	Degree of protection	Order No.①	Pack Unit
	1	NEMA Type 12/13	**P30EMS01**	
	1	NEMA Type 12/13 extra deep	**P30EMS01D**	
	1	NEMA Type 4/4X stainless steel	**P30EMS014**	
	1	NEMA Type 4/4X Fiberglass	**P30EMS01X**	
	2	NEMA Type 12/13	**P30EMS02**	
	2	NEMA Type 12/13 extra deep	**P30EMS02D**	
	2	NEMA Type 4/4X stainless steel	**P30EMS024**	
	2	NEMA Type 4/4X Fiberglass	**P30EMS02X**	
	3	NEMA Type 12/13	**P30EMS03**	
	3	NEMA Type 12/13 extra deep	**P30EMS03D**	
	3	NEMA Type 4/4X stainless steel	**P30EMS034**	
	3	NEMA Type 4/4X Fiberglass	**P30EMS03X**	
	4	NEMA Type 12/13	**P30EMS04**	
	4	NEMA Type 12/13 extra deep	**P30EMS04D**	
	4	NEMA Type 4/4X stainless steel	**P30EMS044**	
	4	NEMA Type 4/4X Fiberglass	**P30EMS04X**	
	6	NEMA Type 12/13	**P30EMS06**	
	6	NEMA Type 12/13 extra deep	**P30EMS06D**	
	6	NEMA Type 4/4X stainless steel	**P30EMS064**	
	9	NEMA Type 12/13	**P30EMS09**	
	9	NEMA Type 12/13 extra deep	**P30EMS09D**	
	9	NEMA Type 4/4X stainless steel	**P30EMS094**	
	12	NEMA Type 12/13	**P30EMS12**	
	12	NEMA Type 12/13 extra deep	**P30EMS12D**	
	12	NEMA Type 4/4X stainless steel	**P30EMS124**	
	16	NEMA Type 12/13	**P30EMS16**	
	16	NEMA Type 12/13 extra deep	**P30EMS16D**	
	16	NEMA Type 4/4X stainless steel	**P30EMS164**	

Order Form

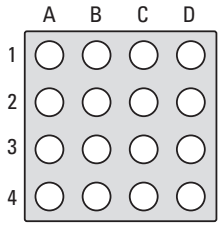

Enclosure Hole Arrangement

Ordering Information

To order non-standard control stations select catalog numbers from the previous pages, determine the required position in the enclosure and fill in the table below. If a special legend plate is required, specify description in the table. The combined list prices of the components is the list price of the station.

- Select enclosure
- Vertical or Horizontal. Outline Diagram at left starting at the top left-hand corner. Example: 3 unit vertical outline location No. 1A, 2A and 3A. 3 unit horizontal outline location No. 1A, 1B, and 1C
- List location No. and applicable catalog numbers in the table below. Use complete catalog numbers where possible

Order No./Item No.

Customer

Enclosure Catalog No.

Location	Operator PB-SEL.-PL	Accessories Key Lock, Boot, Etc,	Legend Plate Legend or Blank	Special Marking

① NEMA 4X Stainless Steel Enclosure is 304 SS.

Design

The 30 mm legend plates are approved for the use with both Class 51 and Class 52 devices.
Automotive legend plates require 2 1/2" mounting centers. Plastic legend plates will have white letters ingraved.

When ordering custom engraved legend plates, specify the required inscription text.

Selection and ordering data

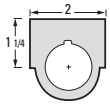

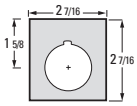

Inscription	Large (1 1/4" x 2") Order No.	Automotive① (2 7/16" x 2 7/16") Order No.	Large Plastic② (2 1/16" x 2") Order No.	Automotive Plastic①② (2 7/16" x 2 7/16") Order No.
"Blank (brushed aluminum)"	**52NL02**	**52NA02**	—	—
"Blank (red)"	**52NL02R**	**52NA02R**	**52ND02R**	**52NE02R**
"Blank (Black)"	**52NL02B**	**52NA02B**	**52ND02B**	**52NE02B**
Inscribed legend plates with large brushed aluminum background				
Close	**52NL18**	**52NA18**	—	—
Down	**52NL10**	**52NA10**	—	—
Emerg Stop	**52NL16**	**52NA16**	—	—
Emerg Stop (red)	**52NL16R**	**52NA16R**	—	—
Fast-Slow	**52NL33**	**52NA33**	—	—
Forward	**52NL05**	**52NA05**	—	—
For-Off-Rev	**52NL38**	**52NA38**	—	—
For-Rev	**52NL31**	**52NA31**	—	—
Hand-Off-Auto	**52NL37**	**52NA37**	—	—
High	**52NL07**	**52NA07**	—	—
High-Low	**52NL30**	**52NA30**	—	—
High-Off-Low	**52NL44**	**52NA44**	—	—
In	**52NL21**	**52NA21**	—	—
Jog	**52NL13**	**52NA13**	—	—
Jog-Forward	**52NL24**	**52NA24**	—	—
Jog-Reverse	**52NL25**	**52NA25**	—	—
Low	**52NL08**	**52NA08**	—	—
Lower	**52NL20**	**52NA20**	—	—
Man-Auto	**52NL35**	**52NA35**	—	—
Off	**52NL12**	**52NA12**	—	—
Off-On	**52NL26**	**52NA26**	—	—
On	**52NL11**	**52NA11**	—	—
On-Off-Auto	**52NL40**	**52NA40**	—	—
Open	**52NL17**	**52NA17**	—	—
Open-Close	**52NL34**	**52NA34**	—	—
Open-Off-Close	**52NL41**	**52NA41**	—	—
Out	**52NL22**	**52NA22**	—	—
Pull to Start Push to Stop	**52NL47**	**52NA47**	—	—
Raise	**52NL19**	**52NA19**	—	—
Raise-Lower	**52NL36**	**52NA36**	—	—
Reset	**52NL14**	**52NA14**	—	—
Reverse	**52NL06**	**52NA06**	—	—
Run	**52NL23**	**52NA23**	—	—
Run-Jog	**52NL29**	**52NA29**	—	—
Safe-Run	**52NL27**	**52NA27**	—	—
Slow-Off-Fast	**52NL39**	**52NA39**	—	—
Start	**52NL03**	**52NA03**	—	—
Start-Jog	**52NL28**	**52NA28**	—	—
Start-Stop	**52NL32**	**52NA32**	—	—
Stop	**52NL04**	**52NA04**	—	—
Stop (red)	**52NL04R**	**52NA04R**	—	—
Up	**52NL09**	**52NA09**	—	—
Up-Down	**52NL49**	**52NA49**	—	—
Up-Off-Down	**52NL42**	**52NA42**	—	—
Inscription plates with custom engraving				
"Custom engraved (brushed aluminum)"	**52NL02E**	**52NA02E**	—	—
"Custom engraved (red)"	**52NL02RE**	**52NA02RE**	**52ND02RE**	**52NE02RE**
"Custom engraved (Black)"	**52NL02BE**	**52NA02BE**	**52ND02BE**	**52NE02BE**
Max. number of rows	2	2	2	2
Letter height	5/32"	1/4"	5/32"	1/4"
Characters per row	14	16	14	16

① Automotive requires 2 1/2" mounting centers
② White letters on plastic nameplate.

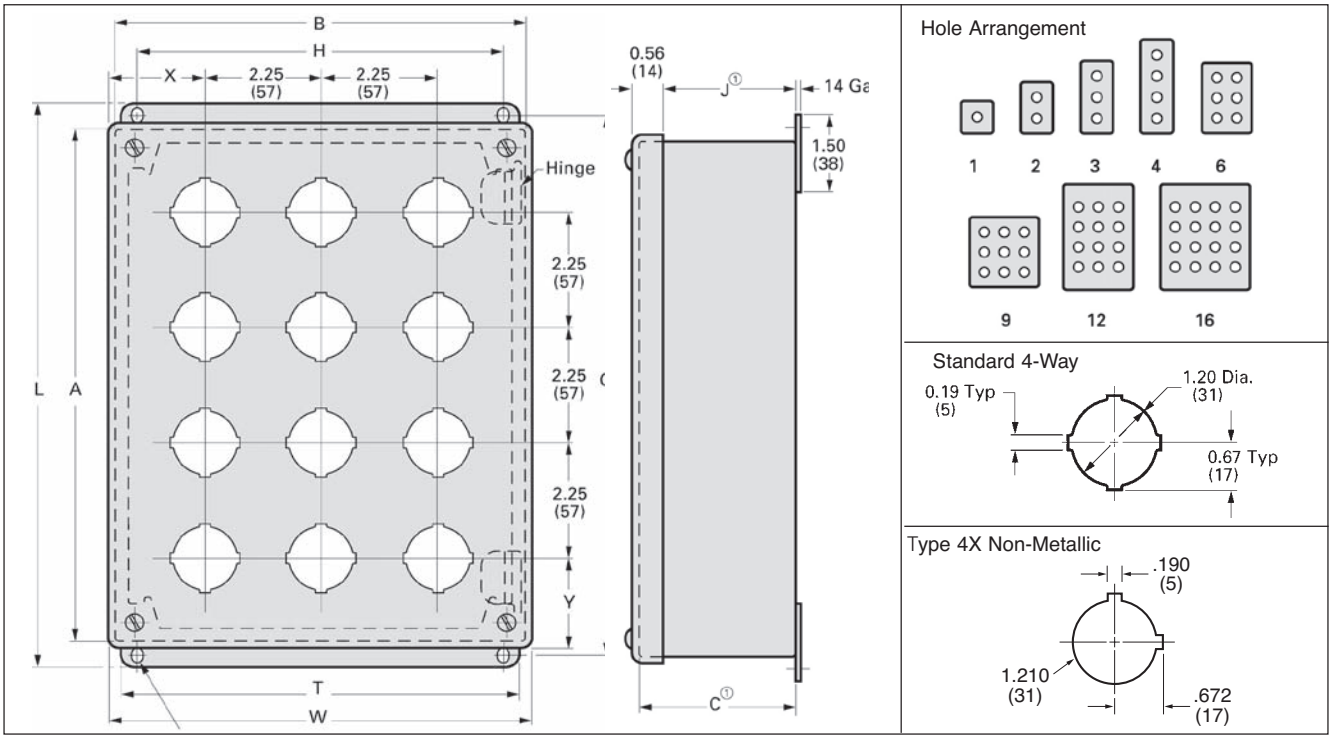

Type 12/13 and 4X Stainless Steel

	Enclosure Size			Mounting		Overall					
Units	A	B	C	G	H	L	W	J	T	X	Y
1	3.50 (89)	3.25 (83)	2.75 (70)	4.00 (102)	2.38 (60)	4.50 (114)	3.47 (88)	2.31 (59)	3.00 (76)	1.73 (44)	1.86 (47)
2	5.75 (146)	3.25 (83)	2.75 (70)	6.25 (159)	2.38 (60)	6.75 (171)	3.47 (88)	2.31 (59)	3.00 (76)	1.73 (44)	1.86 (47)
3	8.00 (203)	3.25 (83)	2.75 (70)	8.50 (216)	2.38 (60)	9.00 (229)	3.47 (88)	2.31 (59)	3.00 (76)	1.73 (44)	1.86 (47)
4	10.25 (260)	3.25 (83)	2.75 (70)	10.75 (273)	2.38 (60)	11.25 (286)	3.47 (88)	2.31 (59)	3.00 (76)	1.73 (44)	1.86 (47)
6	9.50 (241)	6.25 (159)	3.00 (76)	10.00 (254)	5.38 (137)	10.50 (267)	6.47 (164)	2.56 (65)	6.00 (152)	2.11 (54)	2.61 (66)
9	9.50 (241)	8.50 (216)	3.00 (76)	10.00 (254)	7.62 (194)	10.50 (267)	8.72 (221)	2.56 (65)	8.25 (210)	2.11 (54)	2.61 (66)
12	11.75 (298)	8.50 (216)	3.00 (76)	12.25 (311)	7.62 (194)	12.75 (324)	8.72 (221)	2.56 (65)	8.25 (210)	2.11 (54)	2.61 (66)
16[2])	11.75 (298)	10.75 (273)	3.00 (76)	12.25 (311)	9.88 (251)	12.75 (324)	10.97 (279)	2.56 (65)[2])	10.50 (267)	2.11 (54)	2.61 (66)

Type 12/13 Extra Deep Enclosures

	Enclosure Size			Mounting		Overall					
Units	A	B	C	G	H	L	W	J	T	X	Y
1	4.00	4.00	4.75	4.50	3.12	5.00	4.22	4.31	3.75	2.11	2.11
2	6.00	4.00	4.75	6.50	3.12	7.00	4.22	4.31	3.75	2.11	1.98
3	8.00	4.00	4.75	8.50	3.12	9.00	4.22	4.31	3.75	2.11	1.86
4	10.00	4.00	4.75	10.50	3.12	11.00	4.22	4.31	3.75	2.11	1.73
6	9.50	6.25	4.75	10.00	5.38	10.50	6.47	4.31	6.00	2.11	2.61
9	9.50	8.50	4.75	10.00	7.62	10.50	8.72	4.31	8.25	2.11	2.61
12	11.75	8.50	4.75	12.25	7.62	12.75	8.72	4.31	8.25	2.11	2.61
16[2])	11.75	10.75	4.75	12.25	9.88	12.75	10.97	4.31	10.50	2.11	2.61

Type 4X Non-Metallic

	Enclosure Size		Mounting		Overall		
Units	A	B	C	G	H	L	W
1	6.00	3.19	3.63	4.88	2.94	6.63	3.81
2	6.00	3.19	3.63	4.88	2.94	6.63	3.81
3	8.26	3.19	3.63	7.13	2.94	8.88	3.81
4	10.51	3.19	3.63	9.37	2.94	11.13	3.81

All dimensions shown in inches and (millimeters). For reference purposes only. Not to be used for design or construction purposes.

1) Grounding stud in body of enclosure.
2) For stainless steel add 1.75 (45) to depth.

Complete convenience center

Catalog number: POP2017

Complete point-of-purchase convenience center
This starter kit features all of the devices and stand required for you to start selling Siemens.

Includes point of-purchase components:

(8) Pilot light: Red, SB LED, 120V transformer	52PL4G2XYP
(4) Pilot light: Red, SB LED, 24V full voltage	52PL4D2XYP
(4) Pilot light: Red, SB LED, 120V full voltage	52PL4E2XYP
(8) Basic pushbutton: Red extended, 1NC	52PM8B2JP
(4) Basic pushbutton: Green flat, 1NO	52PM8A3KP
(4) Push-Pull E-STOP: Red mushroom head	52PP2W2AP
(4) Twist-to-Release E-STOP: Red Mushroom Head	52PR8W2AP
(4) Selector switch: 3-pos, maintained	52SA2CABA1P
(4) Selector switch: 2-pos, maintained	52SA2AABA1P
(4) Illuminated pushbutton: Red, SB LED, 24V full voltage	52PT6D2AYP
(4) Illuminated pushbutton: Red, SB LED, 120V full voltage	52PT6G2AYP
(4) 30mm pushbutton station: 1 hole	P30EMS01P
(2) 30mm pushbutton station: 2 hole	P30EMS02P
(2) 30mm pushbutton station: 3 hole	P30EMS03P
(1) Point-of-purchase display stand	52STANDPOP

Pilot lights

Catalog number: 52PL4D2XYP

Pilot light: Red, 24V full voltage
with Super-Bright LED and two extra lenses in green and amber; and two legend plates: "On" and "Stop."

Includes components:

(1) Red, 24V Full Voltage, Pilot light, Super-Bright LED	52PL4DXY
(1) Green lens	52RA4S3
(1) Amber lens	52RA4S9
(1) "On" legend	52NL11
(1) "Stop" legend	52NL04

Catalog number: 52PL4E2XYP

Pilot light: Red, 120V full voltage
with Super-Bright LED; two extra lenses in green and amber; and two legend plates: "On" and "Stop."

Includes components:

(1) Red, 120V Full Voltage Pilot Light, Super-Bright LED	52PL4E2XY
(1) Green lens	52RA4S3
(1) Amber lens	52RA4S9
(1) "On" legend	52NL11
(1) "Stop" legend	52NL04

Catalog number: 52PL4G2XYP

Pilot light: Red, 120V transformer
with Super-Bright LED; two extra lenses in green and amber; and two legend plates: "On" and "Stop."

Includes components:

(1) Red, 120V Transformer Pilot Light, Super-Bright LED	52PL4G2XY
(1) Green lens	52RA4S3
(1) Amber lens	52RA4S9
(1) "On" legend	52NL11
(1) "Stop" legend	52NL04

Enclosures

Catalog number: P30EMS01P

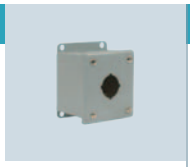

30mm pushbutton station: 1 hole
NEMA 12/13 (IP52/54) standard enclosure

Catalog number: P30EMS02P

30mm pushbutton station: 2 hole
NEMA 12/13 (IP52/54) standard enclosure

Catalog number: P30EMS03P

30mm pushbutton station: 3 hole
NEMA 12/13 (IP52/54) standard enclosure

Pushbuttons

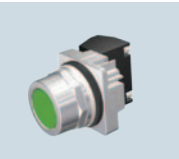

Catalog number:
52PM8A3KP

Basic pushbutton: Green flat
momentary with 1NO. Includes extra caps in black, red, yellow and blue and two legend plates: "On" and "Start."

Includes components:

(1) Green, momentary pushbutton with 1NO	52PM8A3K
(1) Black cap	52RC1A1
(1) Red cap	52RC1A2
(1) Yellow cap	52RC1A4
(1) Blue cap	52RC1A5
(1) "On" legend	52NL11
(1) "Start" legend	52NL03

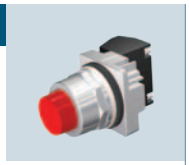

Catalog number:
52PM8B2JP

Basic pushbutton: Red extended
momentary with 1NC. Includes extra caps in black and green and two legend plates: "Stop" and "Off."

Includes components:

(1) Red, momentary extended head pushbutton with 1NC	52PM8B2J
(1) Black cap	52RC1B1
(1) Green cap	52RC1B3
(1) "Stop" legend, red	52NL04R
(1) "Off" legend	52NL12

Emergency stop

Catalog number:
52PP2W2AP

Push-pull: Red mushroom head
2-Pos, maintained, 1 3/4" mushroom head, 1NO-1NC, includes extra 2 1/2" mushroom head, two "Stop" legends, and a 90mm ring inscribed with "Emergency Stop."

Includes components:

(1) Red, E-STOP with 1 3/4" mushroom head, 2-pos, mntd, 1NO-1NC	52PP2W2A
(1) 2 1/2" mushroom head	52RC3E2
(1) "Stop" legend, red	52NL04R
(1) "Stop" legend	52NL04
(1) E-STOP ring legend	52AAR

Pushbuttons

Catalog number:
52PT6D2AYP

Illuminated pushbutton: Red
24V full voltage, Super-Bright LED, 1NC-1NO includes extra lenses in green and amber, and two blank legend plates.

Includes components:

(1) Red, illuminated pushbutton, 24 full voltage, Super-Bright LED with 1NC-1NO	52PT6D2AY
(1) Green lens	52RA5S3
(1) Amber lens	52RA5S9
(2) Blank legend	52NL02

Catalog number:
52PT6G2AYP

Illuminated pushbutton: Red
120V transformer, Super-Bright LED, 1NC-1NO includes extra lenses in green and amber, and two blank legend plates.

Includes components:

(1) Red, illuminated Pushbutton, 120V transformer, Super-Bright LED with 1NC-1NO	52PT6G2AY
(1) Green lens	52RA5S3
(1) Amber lens	52RA5S9
(2) Blank legend	52NL02

Emergency stop

Catalog number:
52PR8W2AP

Twist-to-release: Red mushroom head
2-Pos, maintained, 1 3/4" mushroom head, 1NO-1NC, two "Stop" legends, and a 90mm ring inscribed with "Emergency Stop."

Includes components:

(1) Red, E-STOP with 1 3/4" mushroom mushroom head, 2pos, mntd, 1NO-1NC	52PR8W2A
(1) "Stop" legend, red	52NL04R
(1) "Stop" legend	52NL04
(1) E-STOP ring legend	52AAR

Selector switch

Catalog number:
52SA2CABA1P

Selector switch:
3 Position maintained, short lever, 1NO-1NC, with two legend plates: "Hand-Off-Auto" and "For-Off-Rev."

Includes components:

(1) 3-Position maintained short lever selector switch with 1NO-1NC	52SA2CABA1
(1) "Hand-Off-Auto" legend	52NL37
(1) "For-Off-Rev" legend	52NL38

Catalog Number:
52SA2AABA1P

Selector switch:
2 Position maintained, short lever, 1NO-1NC, with two legend plates: "Forward-Reversing" and "Off-On."

Includes components:

1) 2-Position maintained short lever selector switch with 1NO-1NC	52SA2AABA1
(1) "Forward-Reversing" legend	52NL31
(1) "Off-On" legend	52NL26

Display stand

Catalog number:
52STANDPOP

Point-of-purchase display stand
Two side swivel display stand.

POP Stand	52STANDPOP

Standards	UL Listed File # E22655	CSA Certified File # LR6535
Utilization	Category NEMA	A600/P600
Degree of Protection	52B, 52P-, 52S-, 52M- Operators	NEMA: 1, 3, 3R, 4, 4X, 12 and 13 IEC 529; IP10, IP11, IP14, IP52, IP54, IP56 and IP66

Rated Operational Current

NEMA A600 – 10 Continuous Amps

Voltage AC	Make Amps	Break Amps
120V	**60**	**6**
240V	**30**	**3**
480V	**15**	**1.5**
600V	**12**	**1.2**
Total VA	**7200**	**720**

NEMA P600 – Rating Codes for DC Control Circuit Application

Thermal Continuous Test Current Amps	5.0
Maximum Make or Break; Current / Amps	
125V	1.10
250V	0.55
301-600V	0.20
Maximum Make or Break Volt amperes at 300V or Less	138

Contact Blocks	52BAK, -BAJ①, -BAH, -BAU, -BJK① 52BAR	600VAC Maximum, Heavy Duty 200VAC .25 Amp, 10 Watt Maximum 200VDC .50 Amp, 10 Watt Maximum

① ➔ Positively driven contacts. Contact blocks are suitable for applications down to 5V/1MA low voltage applications as found in PLCs. *52BAR are Class 1; Division 2 Compliant*

Pilot Light	Full Voltage	52PL4/52PL5	-B (6-8V), -C (12V), -D (24V), -E (120V), -F (240V)	240V AC/DC Max.
	LED Module	or	-L (24V), -M (120V) -N (240V)	240V AC Max.
	Transformer Type	52BL4/52BL5	-G (120V), -H (240V), -J (480V), -K (600V)	600V AC Max., 50/60 Hz
Push-to-Test	Full Voltage	52PT6	-B (6-8V), -C (12V), -D (24V), -E (120V), -F (240V)	240V AC/DC Max.
	LED Module	or	-L (24V), -M (120V), -N (240V)	240V AC Max.
	Transformer Type	52BT6	-G (120V), -H (240V), -J (480V), -K (600V)	600VAC Max., 50/60 Hz
Illuminated Push-Pull	Full Voltage	52PP2(3,7)	-B (6-8V), -C (12V), -D (24V), -E (120V), -F (240V)	240V AC/DC Max.
	LED Module	or	-L (24V), -M (120V), - N (240V)	240V AC Max.
	Transformer	52BP2(3,7)	-G (120V), -H (240V), -J (480V), -K (600V)	600VAC Max., 50/60 Hz
Twist-to-Release	Full Voltage	52BR8	-B (6-8V), -C (12V), -D (24V), -E (120V), -F (240V)	240V AC/DC Max.
	LED Module	or	-L (24V), -M (120V), - N (240V)	240V AC Max.
	Transformer	52PR8	-G (120V), -H (240V), -J (480V), -K (600V)	600VAC Max., 50/60 Hz
Illuminated Selector Switch	Full Voltage	52SA7(A,B,C)	-B (6-8V), -C (12V), -D (24V), -E (120V), -F (240V)	240V AC/DC Max.
	Transformer	or	-G (120V), -H (240V), -J (480V), -K (600V)	600V AC Max., 50/60 Hz
		52SX7(A,B,C)		
Dielectric Strength			2200V for one minute	

Mechanical Design Life Cycles

Vibration	Frequency 5 - 60Hz.; Disp. .030 inches, sweep 5 minutes for a duration of 30 minutes on each axis. Not to exceed 5.5 G's for maximum of 1 minute.	
Pushbuttons	Momentary, Non-illuminated Momentary, Illuminated	5,000,000 Operating Cycles 300,000 Operating Cycles
Push-Pull	Maintained Momentary	300,000 Operating Cycles 2,000,000 Operating Cycles
Twist-to-Release		300,000 Operating Cycles
Selector Switches	Non-illuminated Illuminated, Key-operated	2,000,000 Operating Cycles 2,000,000 Operating Cycles
Contact Operation	Standard Contact Black Logic Reed	
Wire Gauge	#18-12 AWG	
Terminal Screw Torque	2-10 lb-in / 20 lb-in max; 8 lb-in recommended	
Locknut Torque	15 ft. lbs. max	
Temperature Range	Operating Storage	31F to +158F (-35C to +70C) 40F to +185F (-40C to +85C)

All parts are designed and manufactured of corrosion resistant material or are plated or painted as corrosion protection. All contact block contacts are gold flashed as a standard offering. Internal return spring mechanisms of operators and contact blocks of stainless steel. RoHS Compliant.

Declaration of Conformity — The products listed below, to which this declaration relates, are in conformity with the following standards, following the provisions of the Low Voltage Directive (LVD) (73/23/EEC), and the Electromagnetic Compatibility Directive (89/336/EEC.)

Products: Contact Blocks: Cat Nos. 52BAE, 52BAH, 52BAJ, 52BAK, 52BAR, 52BAU and 52BJK, with suffixes. Pilot Lights: Cat Nos 52P, with suffixes. Operators: Cat Nos 52S or 52P, with suffixes.

Applicable Standards: EN 60947-5-1 Low-Voltage Switchgear and controlgear. Enclosed devices meet the requirements of environmental ratings of IP10, IP11, IP14, IP52, IP54, and IP56. Open devices, when mounted as instructed, in environmental type IP10, IP11, IP14, IP52, IP54 or IP56 enclosures, maintain the environmental requirements for those enclosure types. Cat. No. 52BP, 52BR, 52PP, and 52PR, 2 Position, Twist-To-Release and 2 Position, Push Pull Maintained operators provided with red operating heads and 52BJK contact blocks meet the requirements of EN 60947-5-5 for Electrical Emergency Stop Device With Mechanical Latching Function (e-stop).