Hart&Cooley
install confidence

SUBMITTAL DRAWING

- ALL STEEL CONSTRUCTION
- INTEGRAL MULTI-SHUTTER DAMPER
- 1/2 INCH SPACED FINS SET AT 40 DEGREES
- MINIMUM SIZE = 6 X 6
- MAXIMUM SIZE = 16 X 16
- 3-WAY DEFLECTION
- FOR HEATING OR COOLING
- FINISH: WHITE (W) ENAMEL

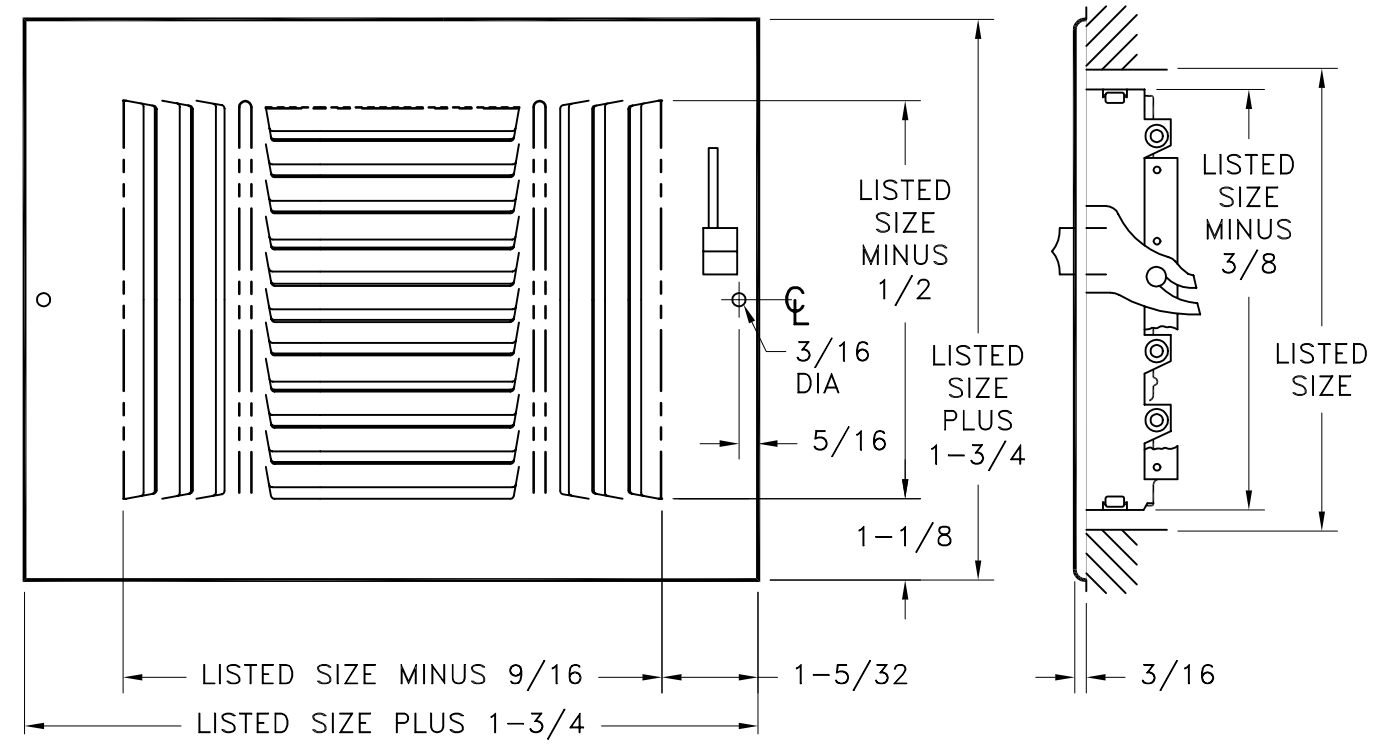

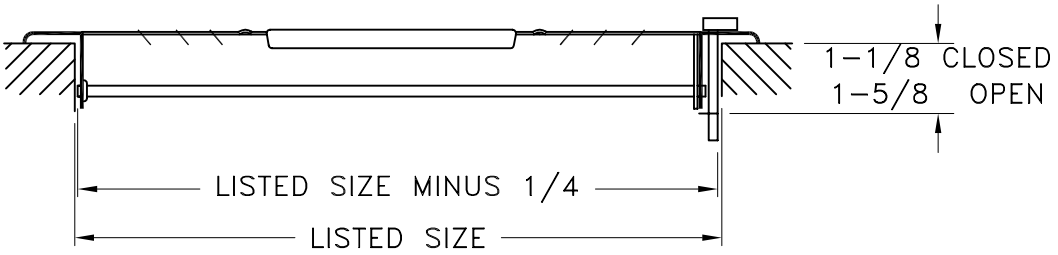

JOB NAME:	SUBMITTED BY:	DATE: 4/21/00	SD-2437
LOCATION:		**683** Steel 3-Way Ceiling Or Sidewall Register	
ARCHITECT:			
ENGINEER:			
CONTRACTOR:			

Hart & Cooley, Inc., 500 E. Eighth St., Holland, MI 49423 Telephone (616) 392-7855 Fax: 1-800-223-8461

© Hart & Cooley, Inc 2002