Freendo®

LIMITED LIFETIME WARRANTY

Compass Manufacturing International warrants to the original consumer purchaser that the faucet be free from defects in material and workmanship for as long as the original consumer purchaser owns the home in which the faucet was first installed.

Compass Manufacturing International will replace, free of charge, during the applicable warranty period, any part or finish that proves defective in material and/or workmanship under normal installation, use and service. Freendo faucets are not designed or intended for commercial use; therefore, no warranty is given on the faucet if it is used for commercial purposes. This warranty shall not apply to goods which have been subject to accidents, negligence or improper installation.

Compass Manufacturing International recommends using a professional plumber for all installation and repair. Compass Manufacturing International will, at its discretion, provide replacement parts for installation by consumer for any parts that prove defective under normal usage and service with new or equivalent parts. Replacement parts may be obtained by emailing the address below, calling the number below or by writing to:

Compass Manufacturing International
Freendo Product Service
6702 Enterprise Drive
Louisville, KY 40214
800.626.3525
warranty@cmiproduct.com

Compass Manufacturing International™
— A SG Global Partners Company —

Rev 01/29/15

© Compass Manufacturing International

Freendo®

Model No. : 192-5883 Polished Chrome
192-5884 Brushed Nickel Spotless PVD™
192-5885 Oil-Rubbed Bronze

Single Handle Lavatory Faucet With Pop-up

3 Hole or Single Hole Installation

Helpful Information

Helpful Tools

Tools:
Gather the necessary tools as shown below to complete the installation of this faucet. Some may not be needed depending on the model of faucet you are installing.

Plumber's Putty

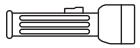
Flashlight

Basin Wrench

Safety Glasses

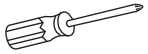
Screwdriver

Pliers

Channel Locks

Adjustable Wrench

5 Parts Diagram / List

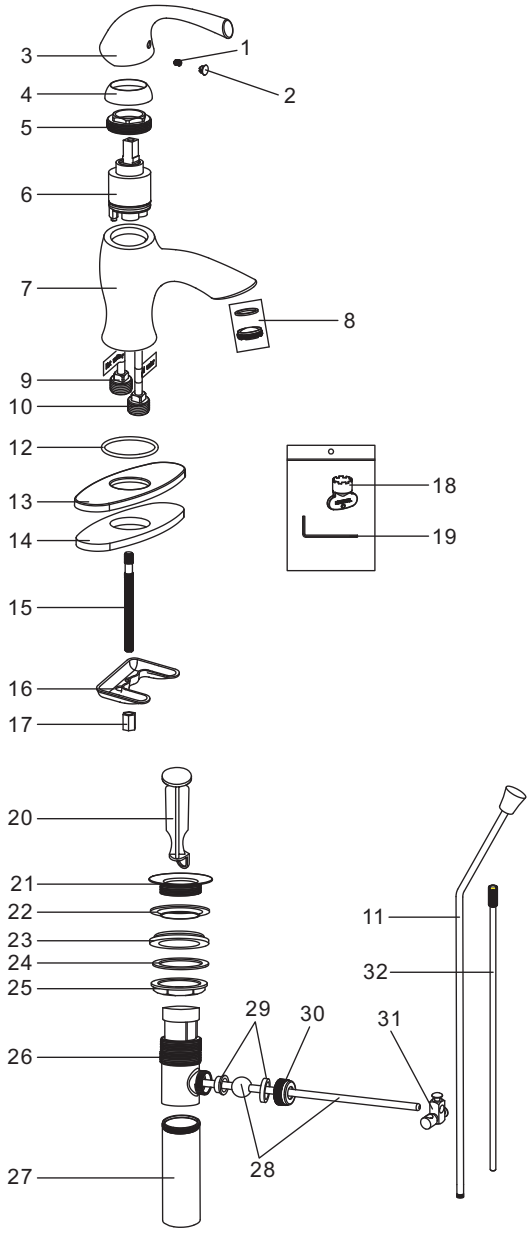

No.	Part Name
32	Extend Rod
31	Fittings
30	Rod Guide Nut
29	Rod Ball Plastic Gasket
28	Horizontal Rod
27	Tailpiece
26	Drain Body
25	Locknut
24	Washer
23	Bottom Rubber Washer
22	Top Rubber Washer
21	Flange
20	Drain Stopper
19	Allen Key
18	Aerator Wrench
17	Locknut
16	Clamp
15	Bolt
14	Putty Plate
13	Deck Plate
12	O-ring
11	Lift Rod
10	Copper tube
9	Copper tube
8	Aerator
7	Body
6	Cartridge
5	Cartridge Locknut
4	Trim Cap
3	Handle
2	Index
1	Screw

Configuration

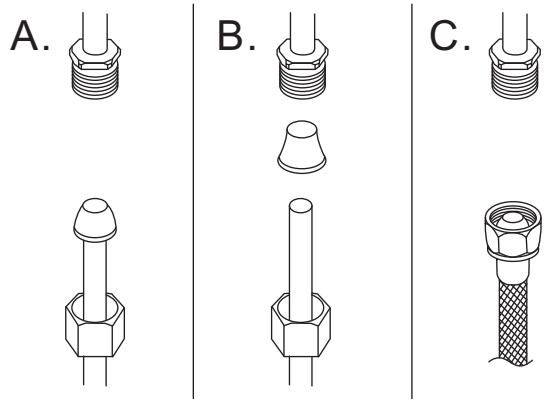

Warning:
The supply valves and supply lines are not included, please purchase them at a plumbing supply store.

Connect to water supply lines with either:

(A) 3/8″ O.D. Copper tubing (ball nose risers with the coupling nuts or;

(B) 3/8″ Copper tubing (no ball) with supplied tube head interior connector or;

(C) IPS faucet connectors (½″)

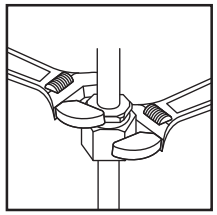

Important:
Important
Tighten connection with two wrench to prevent damage to tube body. Be careful not to bend the stem as this will void the product warranty.

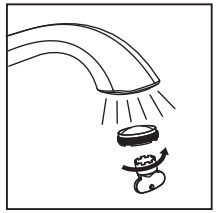

Important:
Remove the aerator and let both hot and cold water run for one minute to clear any line trash. This will help clean any debris that might clog the system. Re-assemble aerator.

Test system for leaks .

Preparation / Mounting

Install With Deck Plate

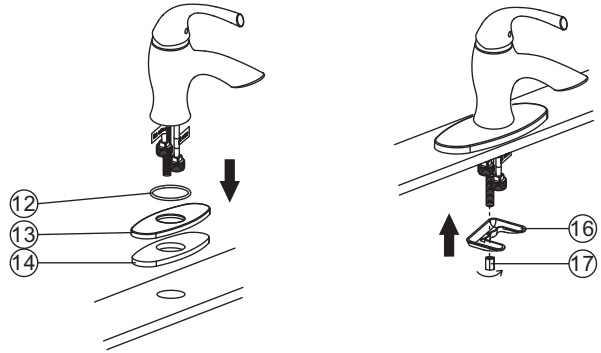

1.Position the faucet, deck plate ⑬ and putty plate ⑭ in order on the countertop as shown. Don't forget the o-ring ⑫.
2.Fix the faucet with clamp ⑯ and locknut ⑰, and tighten the locknut with basin wrench. **But DON'T OVER TIGHTEN.**
Add silicone under faucet to prevent leaks.(Optional)

Install Without Deck Plate

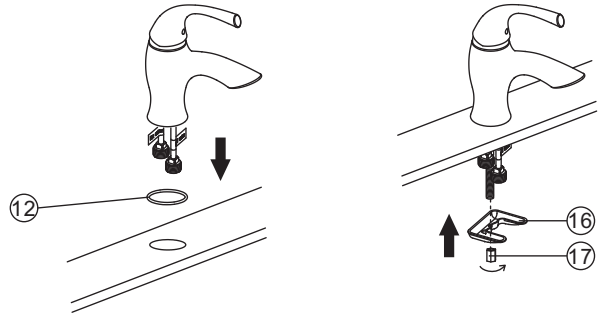

1.Position the faucet in order on the countertop as shown. Don't forget the o-ring ⑫.
2.Fix the faucet with clamp ⑯ and locknut ⑰,and tighten the locknut with basin wrench.**But DON'T OVER TIGHTEN.**

2

Pop-up Installation

Instruction for product with drain option only

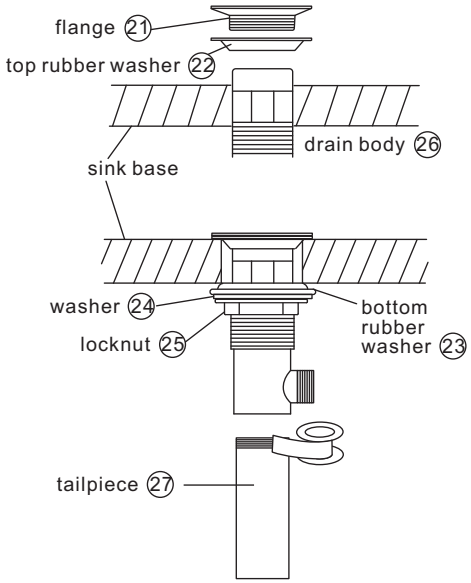

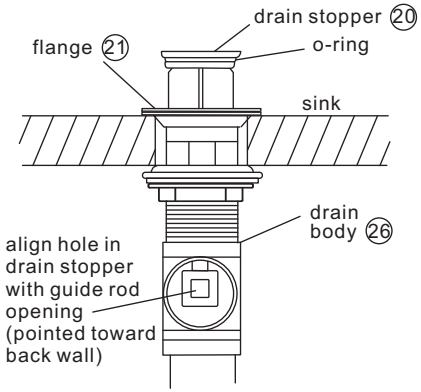

A. Remove pop-up drain stopper 20. and flange 21 with top rubber washer 22 for pop-up assembly.
B. Insert drain body from underneath of sink drain hole.Replace flange 21 and top rubber washer 22 back to drain body 26.Tighten flange as far as possible. Remove 22 and put silicone along bottom of 21 .(Optional)
C. Slide bottom rubber washer 23 on drain body up against bottom of sink. Tighten washer 24 and locknut 25 firmly against base for tight seal.
D.Remove tailpiece 27 from drain body 26 ,add Teflon tape,replace tailpiece 27.

A. Replace pop-up drain stopper 20 to drain body 26 with o-ring in place, and align stopper hole with guide rod opening.

3

Pop-up Installation

Instruction for product with drain option only

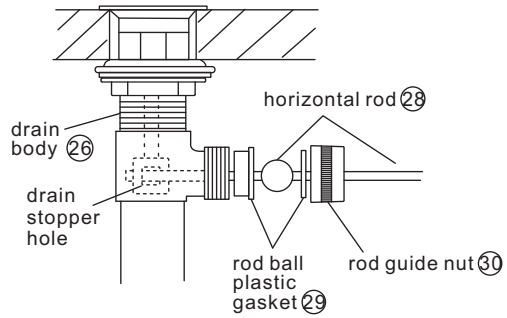

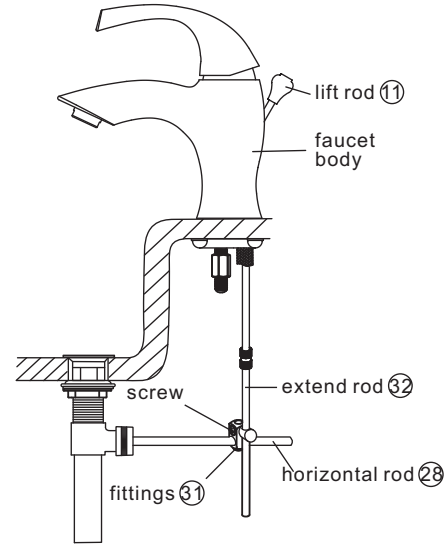

A. Remove rod guide nut 30 and rod ball plastic gasket 29 .
B. Insert horizontal rod 28 into drain body 26 and through hole in drain stopper 20.
C. Replace rod guide nut 30 with rod ball plastic gasket 29 and tighten it.

A. Insert lift rod 11 through hole on faucet body.
B.Connect extend rod 32 to lift rod 11 .Attach horizontal rod 28 to extend rod 32 using fittings 31, tighten screw.